Play-out Delay in PSS

NOKIA

 © 2008 Nokia

Play-out Delay

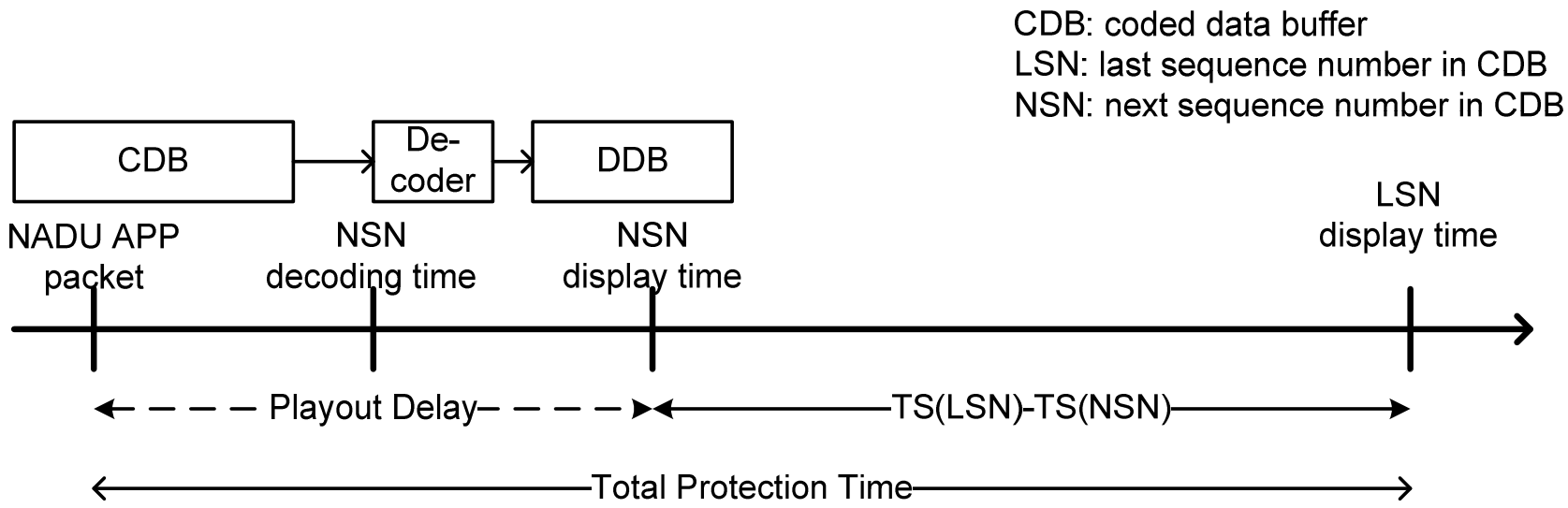

- TS(LSN)-TS(NSN) is an estimation of the total protection time that is rather on the lower bound. It assumes that at the time of sending the NADU APP packet, the NSN data unit will be immediately removed from CDB, decoded and rendered
- Play-out delay adds more accuracy to the total protection time as it allows the client to inform the server about the time period from generating the NADU APP packet till the display of the NSN data unit
- However, Play-out delay is not always predictable, although it might constitute a significant portion of the total protection time

 © 2008 Nokia

Play-out Delay in different phases

- Buffering:
  - CDB is being filled up (data may be pre-decoded and put to DDB, NSN is updating accordingly)
  - Play-out Delay is estimated by the client as the time between NSN removal from CDB and NSN display, data units that are pre-decoded are not counted. This value is then fixed (subject to decoding order adjustments)
  - Decoding time of NSN is assumed to be unknown so that the second component of play-out delay (NADU APP packet generation till NSN decoding) is assumed to be 0
- Playing:
  - Decoding of NSN is already scheduled so that time between NADU APP till NSN decoding is known
  - Time from NSN decoding to display is fixed (subject to decoding order adjustments)
- Total Protection Time is below Target Protection Time:
  - Server may use additional rate to re-achieve the target protection time
  - Play-out delay is calculated as earlier
- Buffer empty (underflow):
  - CDB is empty, NSN is the next expected RTP packet sequence number
  - Total Protection Time and Play-out Delay are set to the amount of display time covered by data in the DDB .
  - Re-buffering may start when CDB is empty or when total protection time is 0 or when either of them goes below a threshold value. The re-buffering strategy is implementation specific, although it might be good for the server to know if re-buffering started at the client

 © 2008 Nokia

NOKIA

Conclusions

- Client may not be able to estimate time from NSN removal out of the CDB to NSN display
- Re-buffering at the client may be steered by the amount of data in CDB and not by the total protection time, i.e. if CDB is empty (or below re-buffering threshold) re-buffering starts even if there is some data waiting for display in DDB
- When Play-out Delay is not used
  - Client signals the Target Protection Time without accounting for the time between CDB removal and display
  - Play-out Delay field is set to undefined
- When Play-out Delay is used
  - A well defined value is signaled by the client to indicate that server has to use the play-out delay in the total protection time calculaiton
  - Server may use the amount of display data in DDB to fill up the buffer and try to avoid play-out interruption

 © 2008 Nokia

NOKIA