VoIP LI Functions
Discussion and Introduction to Options

Nagaraja (Nag) Rao
Nokia Solutions and Networks

©2013 Nokia Solutions and Networks. All rights reserved.

Drawn by N. Rao

Overview of Previous Discussions

Drawn by N. Rao

The Initial CRs submitted to SA3LI#51

- SA3LI13_093 : On clause 4 and updates to the existing text of TS 33.107 **Clause 4**
  - The CR was proposing two new figures clause 4 club and changes to the existing text.
  - During the SA3LI#51 meeting on 10/22/13, several edits were suggested, and revised version, SA3LI13_093r1, was posted.
  - The main change made in SA3LI3_093r1 was removing the labels Rx, Gx, Iq, Ix, Mn from the diagrams.
- SA3LI13_094: On a new clause to TS 33.107 **New Clause**
  - During the SA3LI#51 meeting on 10/23/13, several edits were suggested (e.g., moving the background section to the informative annex, removing the labels to the reference points to be in line with the SA3LI13_093r1 etc.,)
  - It was agreed to generate a mega CR combining the SALI13_093r1, the revised SA3LI13_094 (not published) and revised SA3LI_095 (not published).
  - The mega CR was in SA3LI13_131.
- SA3LI13_095: On a new informative annex to TS 33.107 **New Informative Annex**
  - During the SA3LI#51 meeting on 10/23/13, several edits were suggested (e.g., bringing the background section here, removing the labels to the reference points).
  - It was agreed to generate a mega CR combining the SALI13_093r1, the revised SA3LI13_094 (not published) and revised SA3LI_095 (not published).
  - The mega CR was in SA3LI13_131.

**** End of Life ****

Drawn by N. Rao

Revised CRs generated & presented during SA3LI#51

- **SA3LI13_093 r1**: On clause 4 and updates to the existing text of TS 33.107
  - This was discussed on 10/24/13. This is part of SA3LI13_131 and hence, no more discussion.
  - **** End of Life ****
- √ **SA3LI13_131**: Combined CR of SA3LI13_093r1, unpublished revisions of SA3LI13_094 & SA3LI13_095
  - This was discussed on 10/24/13.
  - ****** Reincarnated as SA3LI14_006 (Option 2, no labels to reference points).**
- **SA3LI13_132 (sister):** Alternative to SA3LI13_093r1: alternative figures to clause 4
  - This was discussed on 10/24/13. This is part of SA3LI13_133 (sister), and hence, no more discussion.
  - **** End of Life ****
- **SA3LI13_132 (brother):** Alternative to SA3LI13_093r1; alternative figures to clause 4
  - This was discussed on 10/24/13. Since this is part of SA3LI13_133 (brother), and hence, no more discussion.
  - **** End of Life ****
- √ **SA3LI13_133 (sister):** Alternative to SA3LI13_131 – includes SA3LI13_132 (sister), unpublished revision of SA3LI13_095 and alternative to the unpublished revision of SA3LI13_094.
  - This was discussed on 10/24/13.
  - ****** Reincarnated as SA3LI14_006 (Option 3, abstract approach 1).**
- √ **SA3LI13_133 (brother):** Alternative to SA3LI13_131 – includes SA3LI13_132 (brother), unpublished revision of SA3LI13_095 and alternative to the unpublished revision of SA3LI13_094.
  - This was discussed on 10/24/13.
  - ****** Reincarnated as SA3LI14_006 (Option 5, abstract approach 3).**

Drawn by N. Rao

Post Meeting Event:

- An email was sent with the summary of the meetings with various CR-files showing different options. Document distributed for email discussion:
  - SA3LI13_131
  - SA3LI13_133 (sister)
  - SA3LI13_133 (brother)
  - SA3LI13_131 (with labels back)
- **Discussion points - from the meeting to the email:**
  1. The email presented 4 possible options (Option 1, Option 2, Option 3a, Option 3b, Option 4)
  2. Which one of the 4 options is to be used to select the diagrams that can join the club in Clause 4?

     Points to Note:

     a) Option 1, if chosen, then SA3LI13_131 (with labels back) will be used as a start.
     b) Option 2, if chosen, then SA3LI13_131 will be used as a start.
     c) Option 3a, if chosen, then SA3LI13_133 (sister) will be used as a start.
     d) Option 3b, if chosen, a revised SA3LI_133 (sister) will be used as a start; Revision: to replace the Figure 1g, 1h and the related text.
     e) Option 4, if chosen, then SA3LI13_133 (brother) will be used as a start.
  3. Should the reference points between the CC interception trigger nodes and the media nodes that perform the CC interface be standardized?

     Points to note:

     a) Reference point Mc (Figure 1a) and the unlabelled Reference Point between MRFC and MRFP are not standardized.
  4. If option 3a is chosen, should the Figure 1d be deleted from clause 4 of 33.107?

     Points to note:

     a) Figure 1g and 1h show the X2 and HI2 for IMS; Figure 1d shows the same.

Drawn by N. Rao

Introduction to the new CR Options

Drawn by N. Rao

Overview of the Options (SA3LI14_006) – 1/2

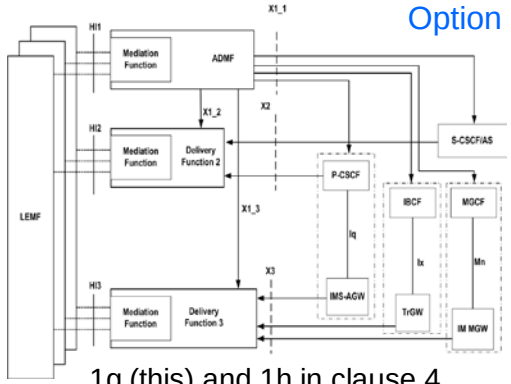

1g (this) and 1h in clause 4

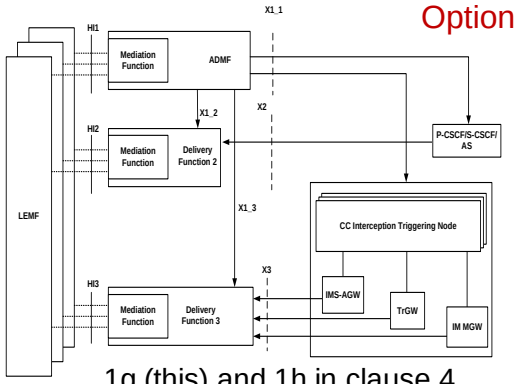

1g (this) and 1h in clause 4

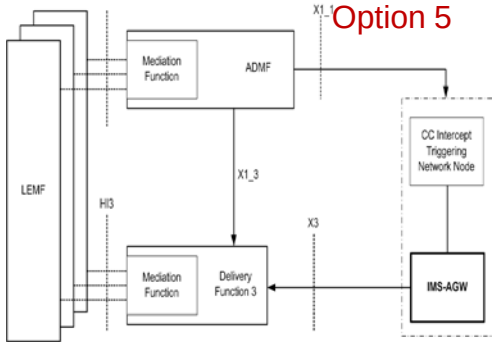

1g (this), 1h, 1i and 1j in clause 4

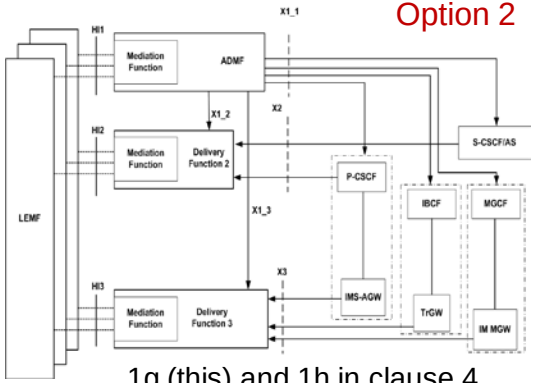

1g (this) and 1h in clause 4

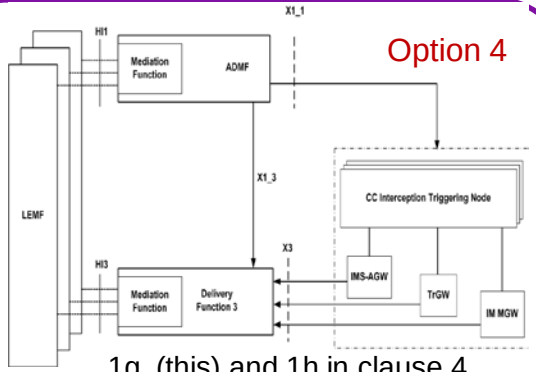

1g (this) and 1h in clause 4

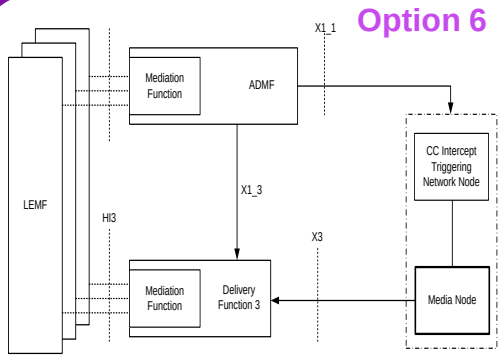

1g (this) in clause 4

Drawn by N. Rao

Overview of the documents in SA3LI14_006

- Documents:
  - SA3LI14_006_VoIP_LI (Option 1- with labels to the Reference Points)
    - 2 new figures to clause 4, 8 new figures in the new clause, 13 new figures in the informative annex
  - SA3LI14_006_VoIP_LI (Option 2 – Option 1 without the labels to the Reference Points)
    - 2 new figures to clause 4, 8 new figures in the new clause, 13 new figures in the informative annex
  - SA3LI14_006_VoIP_LI (Option 3 – Abstract Level – Approach 1)
    - 2 new figures to clause 4, 8 new figures in the new clause, 13 new figures in the informative annex
  - SA3LI14_006_VoIP_LI (Option 4 – Abstract Level – Approach 2)
    - 2 new figures to clause 4, 8 new figures in the new clause, 13 new figures in the informative annex
  - SA3LI14_006_VoIP_LI (Option 5 – Abstract Level – Approach 3)
    - 4 new figures to clause 4, 8 new figures in the new clause, 13 new figures in the informative annex
  - SA3LI14_006_VoIP_LI (Option 6 – Alternate Approach
    - 1 new figure to clause 4, 4 new figures in the new clause, 13 new figures in the informative annex.
- Commonality:
  - Informative Annex is same in all the options
  - New clause is same in Option 3, 4, and 5
  - Option 1 and Option 2 are same, except that Option 1 has labels and Option 2 do not have labels for the reference points in the normative section.
  - Option 6 is a combination of the approaches, generalizes the CC interception, discusses the packet core node part.
- Enhancements in these set (new):
  - Added the GGSN part
  - Added the IMS roaming scenario
  - Option 6

Drawn by N. Rao

Introduction to the Figures of New CRs

Drawn by N. Rao

Option 1 & 2

- Option1: With labels to the reference points
- Option 2: Option 1 without the labels to the reference points in the normative section.

Drawn by N. Rao

Clause 4 (Option 1 & Option 2)

Figure 1g: IMS-based VoIP Intercept Configuration with Target's CC Interception in IMS-AGW

Option 1: With Labels

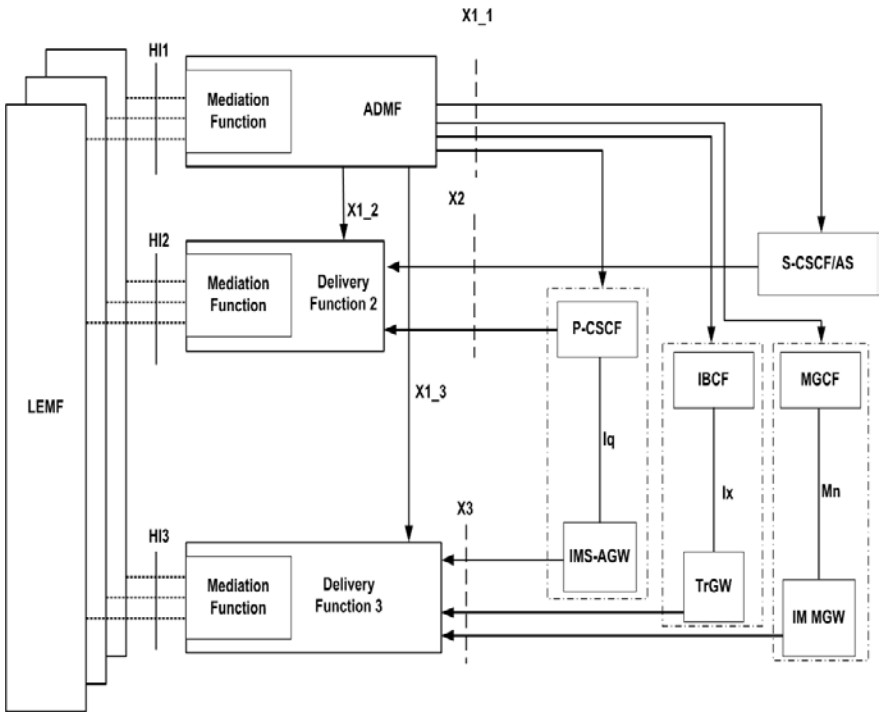

Option 2: Without the Labels

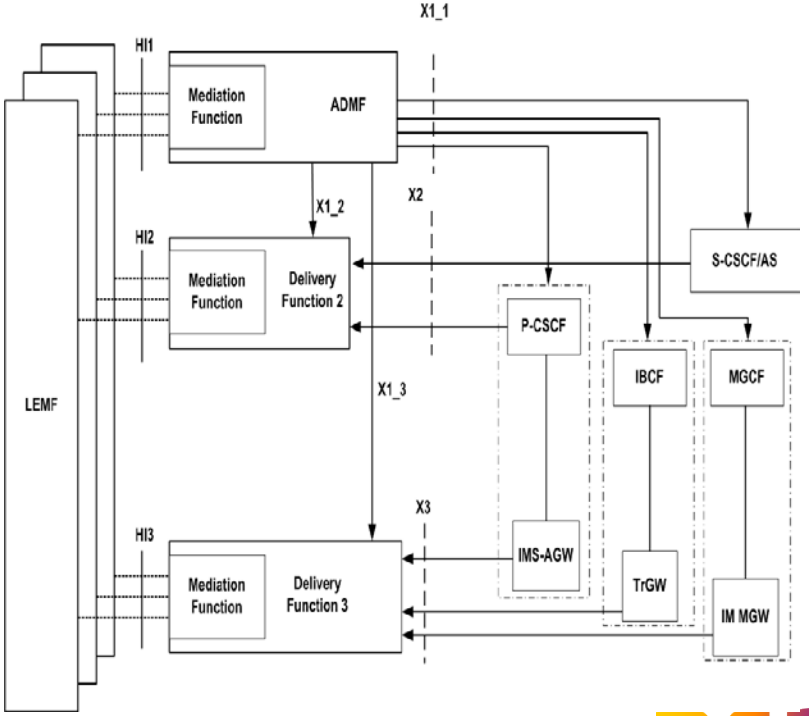

Drawn by N. Rao

Clause 4 (Option 1 & Option 2)

Figure 1h: IMS-based VoIP Intercept Configuration with Target's CC Interception in PDN-GW/GGSN

Option 1: With Labels

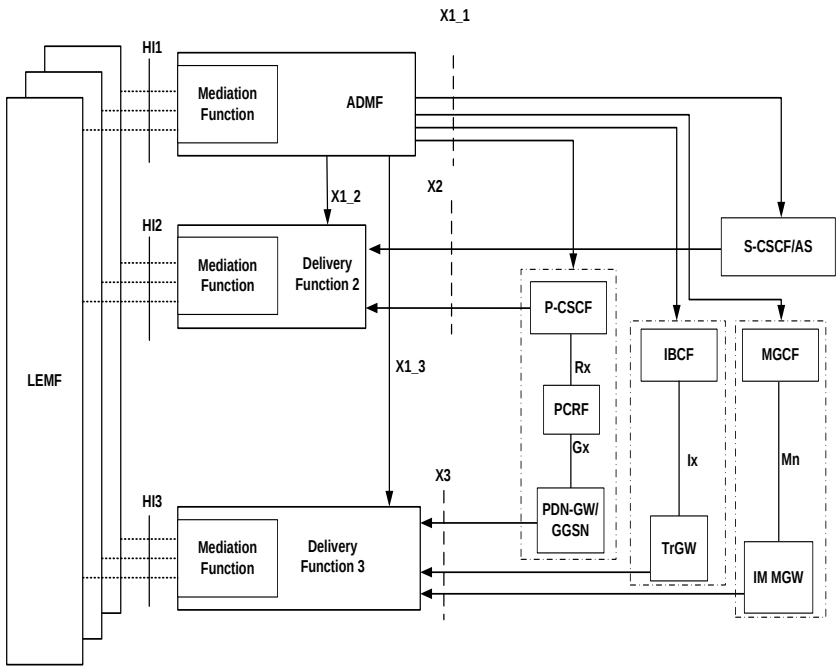

Option 2: Without the Labels

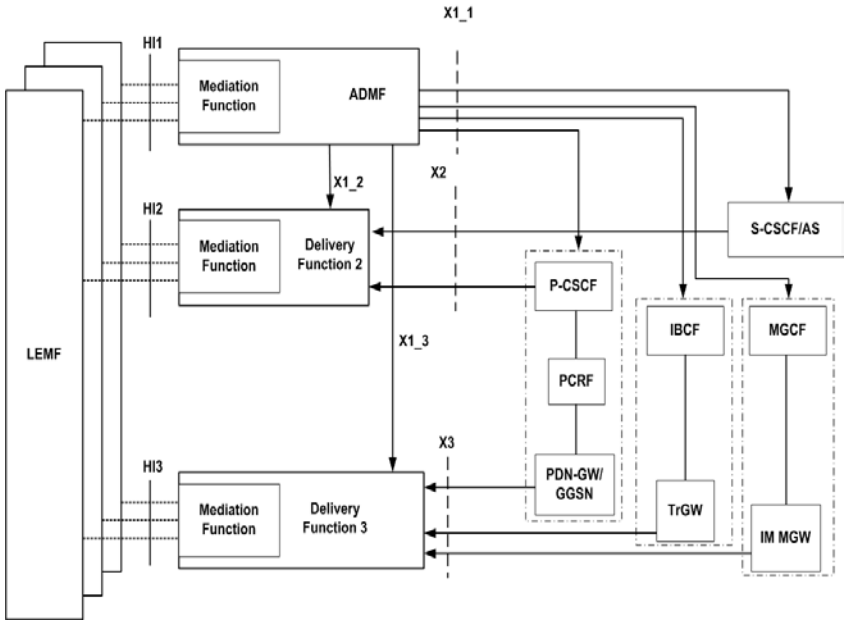

Drawn by N. Rao

New Clause Y (Option 1 & Option 2)

Figure Y1: : IMS-based VoIP CC Interception and Delivery – an overview

Option 1: With Labels

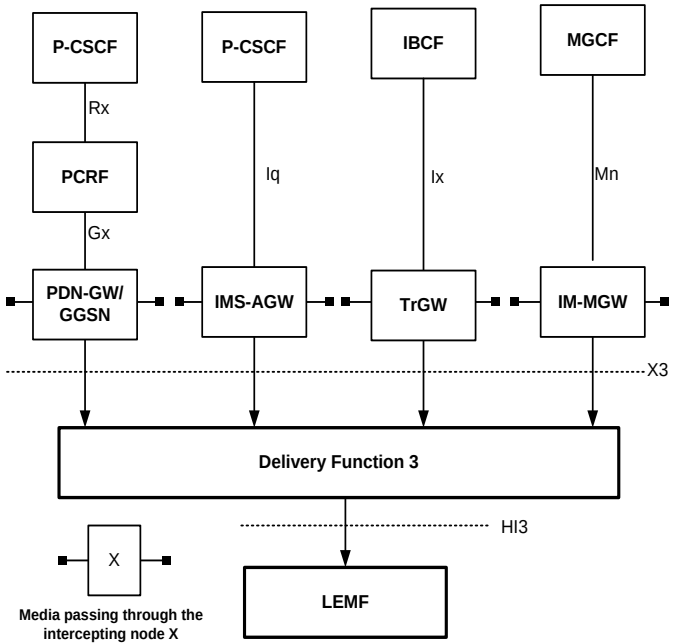

Option 2: Without the labels

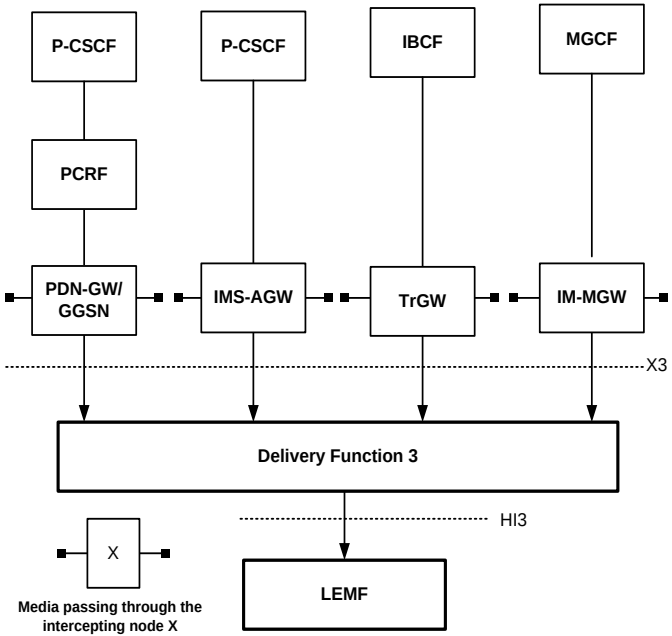

Drawn by N. Rao

New Clause Y (Option 1 & Option 2)

Figure Y2: : IMS-based VoIP CC Interception at the IMS-AGW for basic calls

Option 1: With the Labels

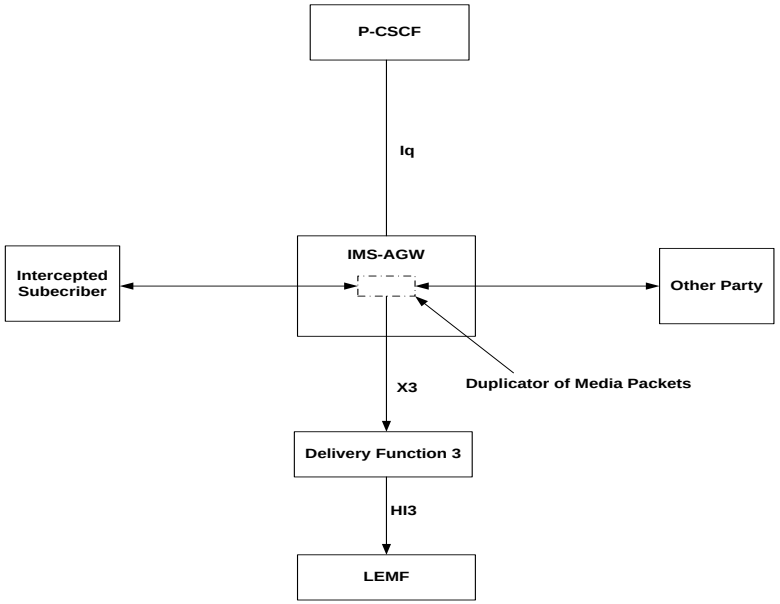

Option 2: Without the Labels

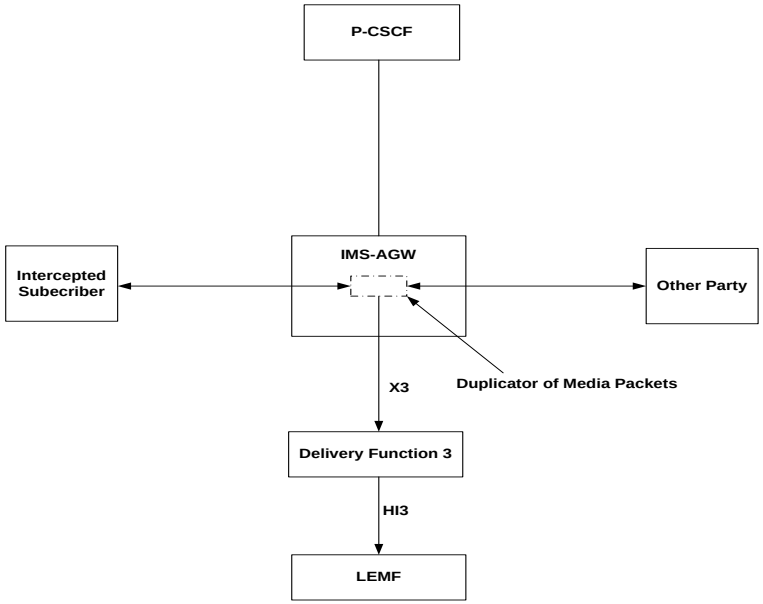

Drawn by N. Rao

New Clause Y (Option 1 & Option 2)

Figure Y3: IMS-based VoIP CC Interception at the IMS-AGW for intra-CSP forwarded calls

Option 1: With the Labels

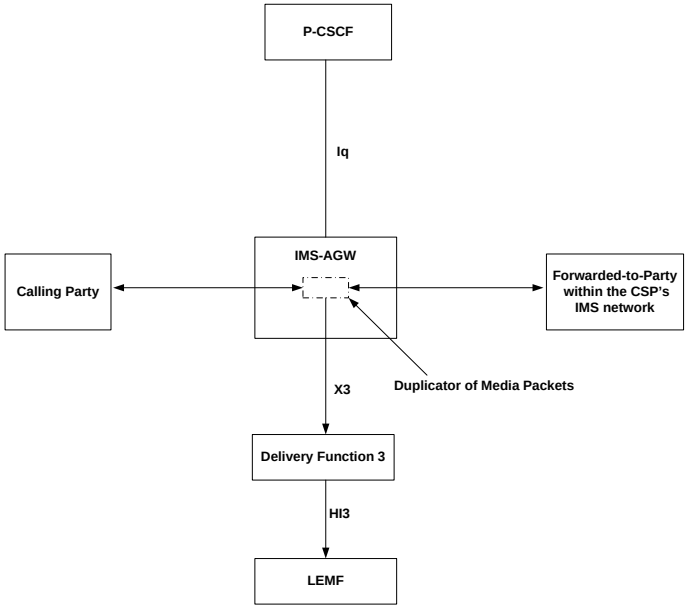

Option 2: Without the Labels

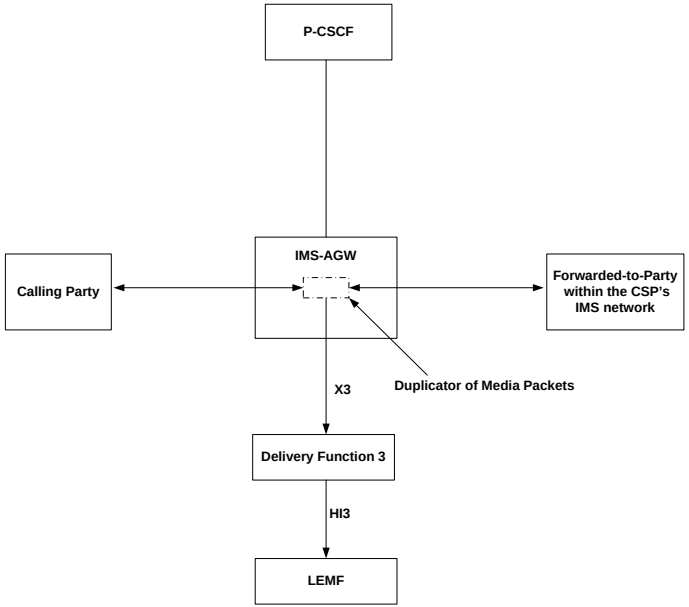

Drawn by N. Rao

New Clause Y (Option 1 & Option 2)

Figure Y4: : IMS-based VoIP CC Interception at the PDN-GW/GGSN for basic calls

Option 1: With the Labels

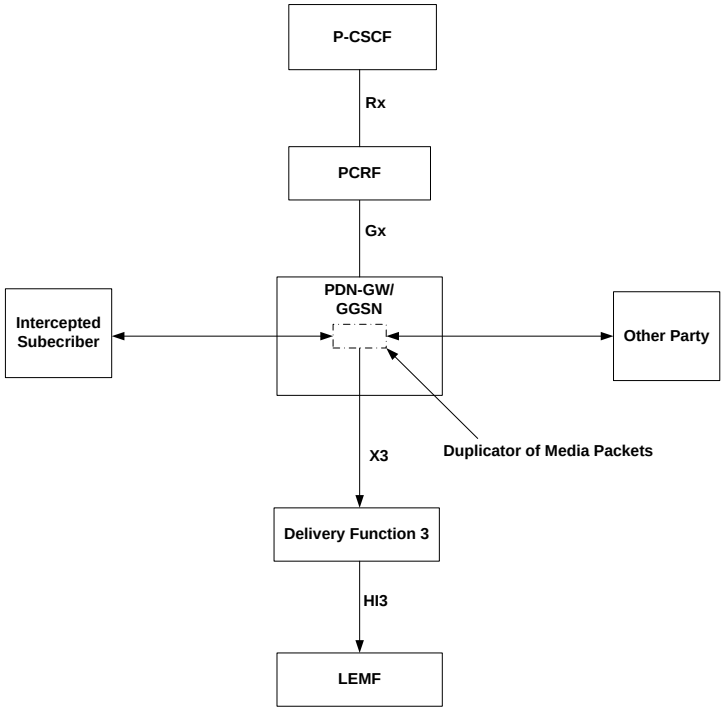

Option 2: Without the Labels

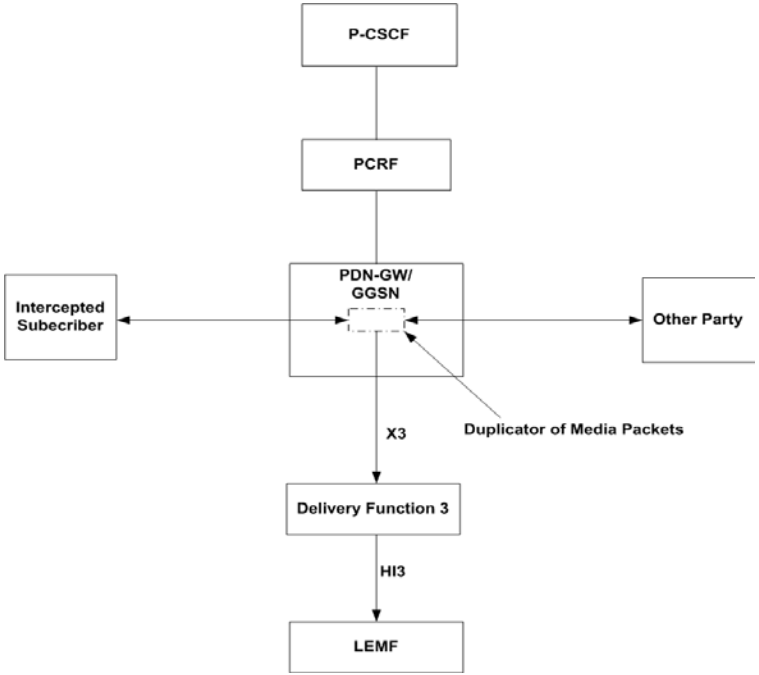

Drawn by N. Rao

New Clause Y (Option 1 & Option 2)

Figure Y5: IMS-based VoIP CC Interception at the PDN-GW/GGSN for intra-CSP forwarded calls

Option 1: With the Labels

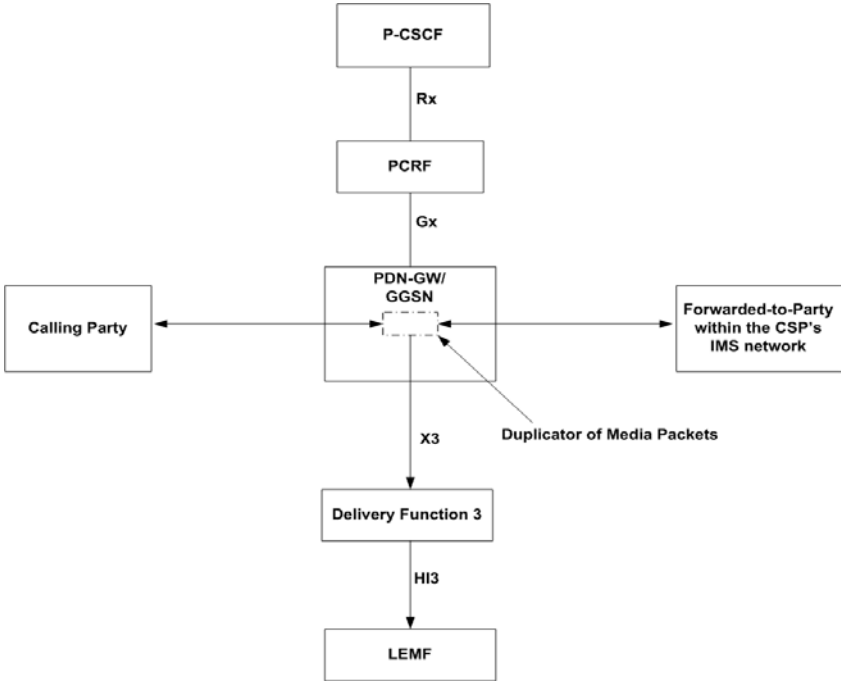

Option 2: Without the Labels

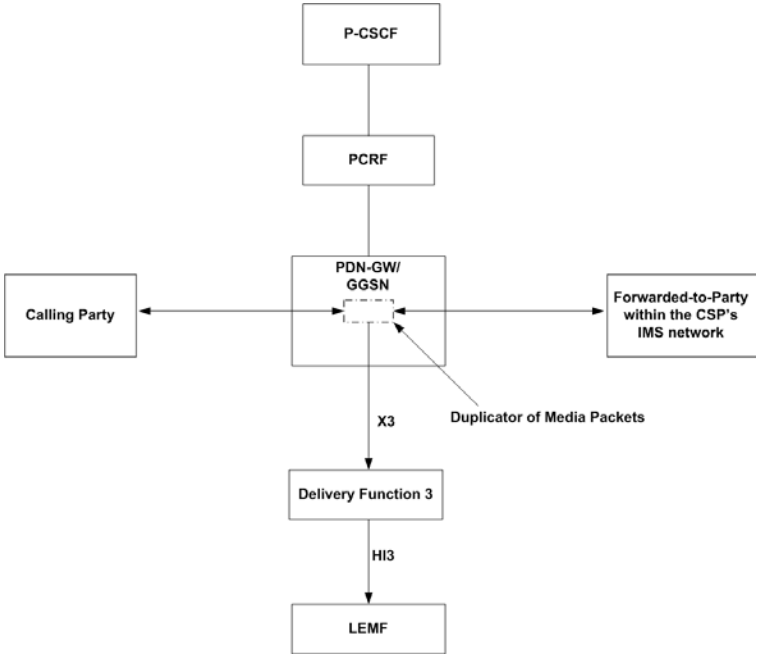

Drawn by N. Rao

New Clause Y (Option 1 & Option 2)

Figure Y6: IMS-based VoIP CC Interception at the TrGW for inter-CSP Forwarded Calls

Option 1: With the Labels

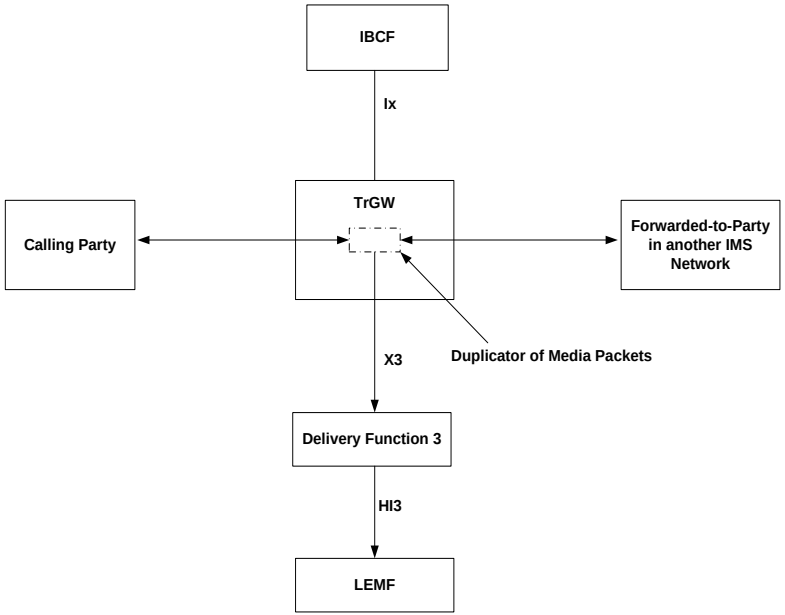

Option 2: Without the Labels

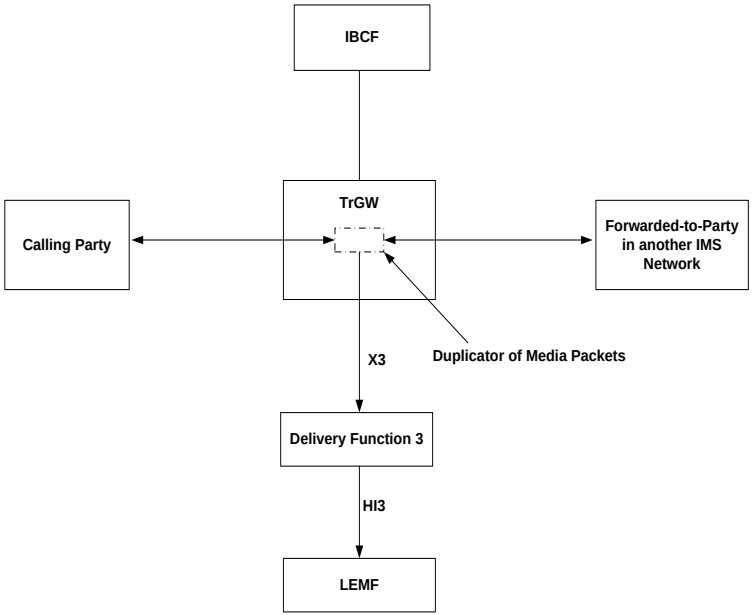

Drawn by N. Rao

New Clause Y (Option 1 & Option 2)

Figure Y7: IMS-based VoIP CC Interception at the TrGW for IMS Roaming Scenario

Option 1: With the Labels

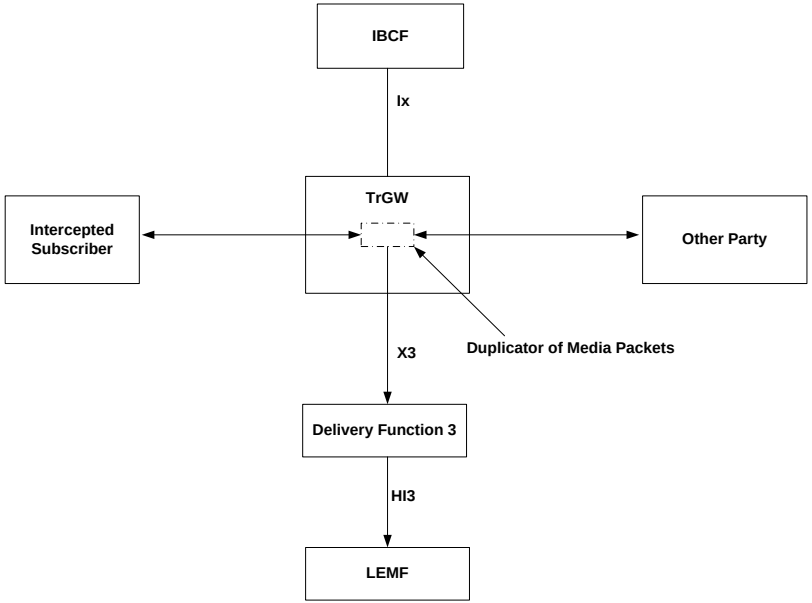

Option 2: Without the Labels

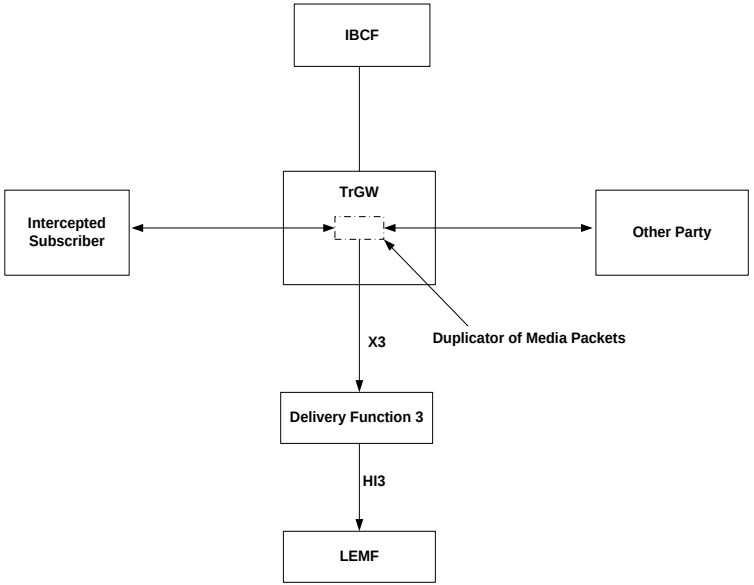

Drawn by N. Rao

New Clause Y (Option 1 & Option 2)

Figure Y8: IMS-based VoIP CC Interception at the IM-MGW for inter-CSP Forwarded Calls

Option 1: With the Labels

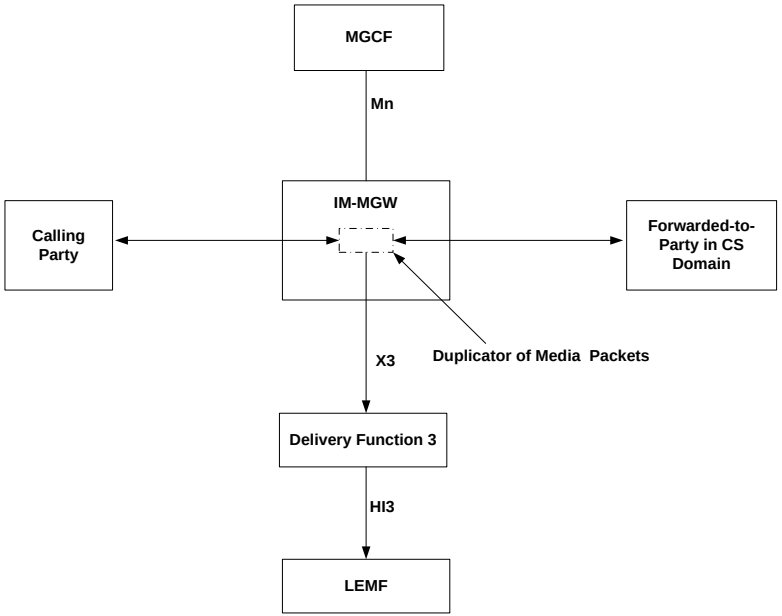

Option 2: Without the Labels

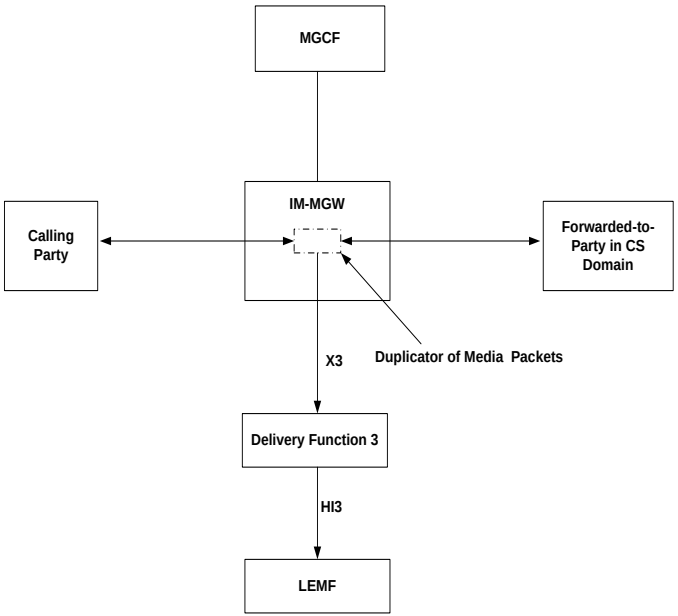

Drawn by N. Rao

Option 3 & 4 & 5

- Abstract Level Presentation
- Option 3: Approach 1
  - Discussed during SA3LI#51 (sister document)
- Option 4: Approach 2
  - Idea popped during SA3LI#51
  - Option 3 without the IRI interception in the diagram of clause 4
- Option 5: Approach 3
  - Discussed during SA3LI#51 (brother document)

Drawn by N. Rao

Clause 4 (Option 3 & Option 4)

Figure 1g: VoIP Intercept Configuration with Target's CC Interception in IMS-AGW

Option 3 With IRI Interception

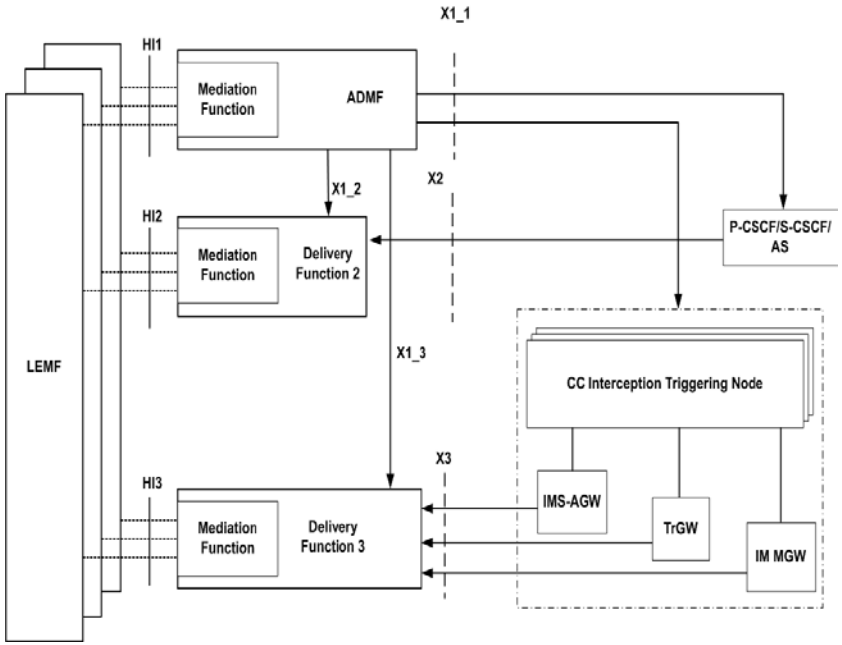

Option 4: Without IRI Interception

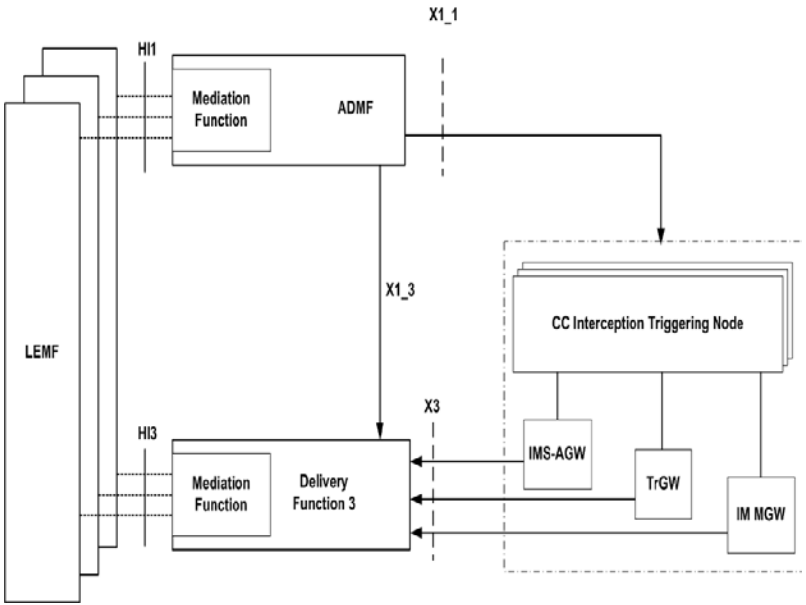

Drawn by N. Rao

Clause 4 (Option 3 & Option 4)

Figure 1h: VoIP Intercept Configuration with Target's CC Interception in PDN-GW/GGSN

Option 3: With IRI Interception

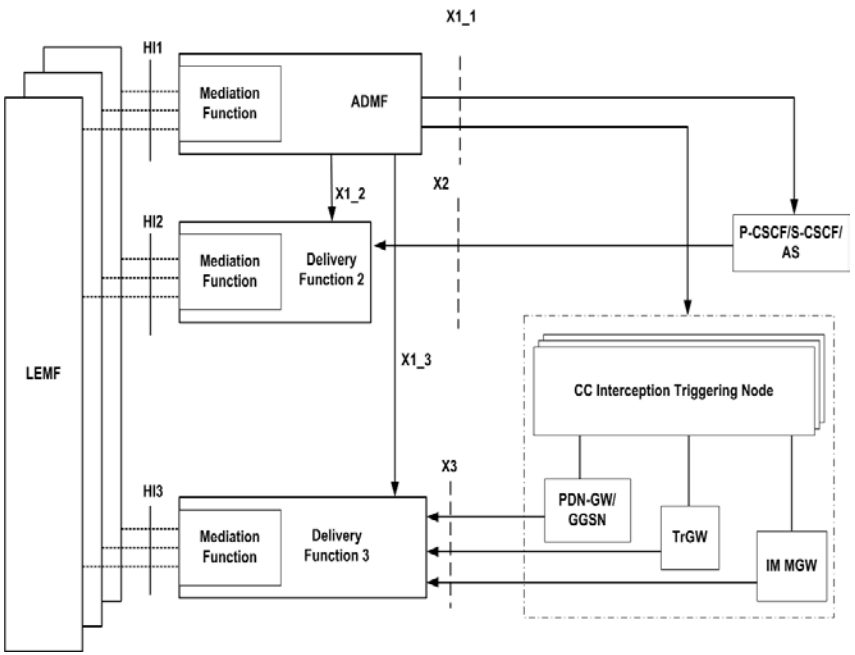

Option 4: Without IRI Interception

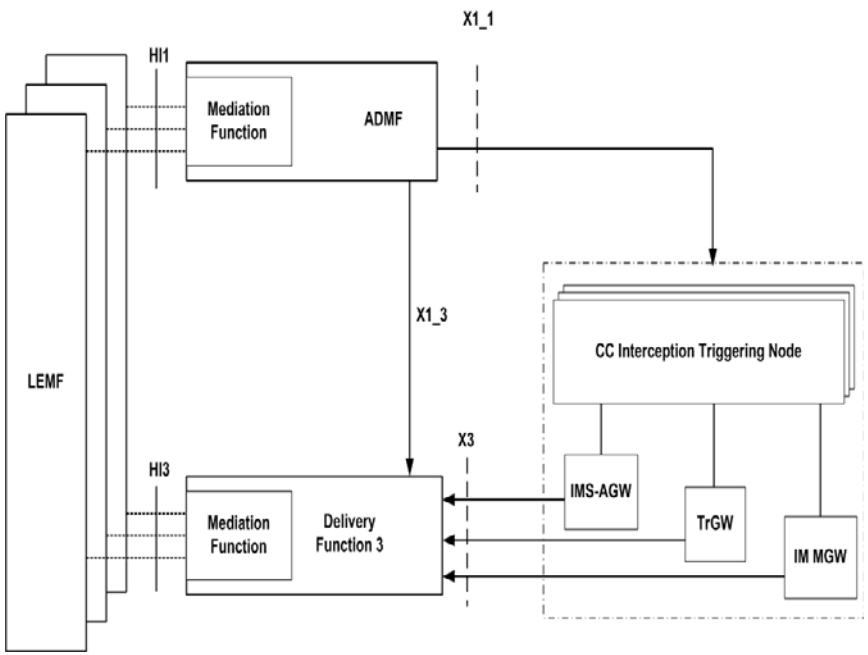

Drawn by N. Rao

Clause 4 (Option 5)

VoIP CC Intercept Configuration

Figure 1g: In IMS-AGW

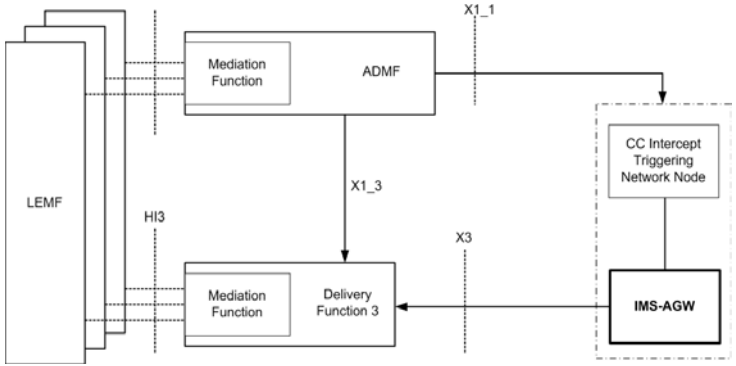

Figure 1h: In PDN-GW/GGSN

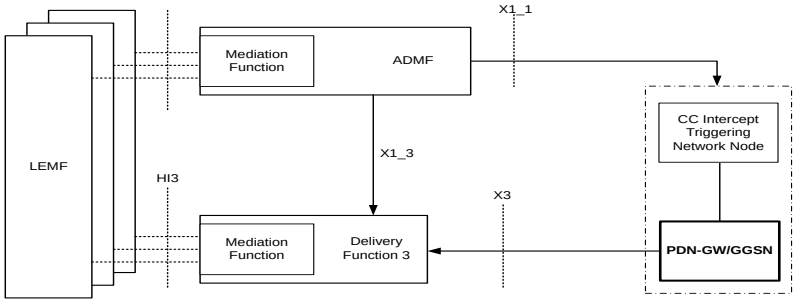

Figure 1i: In TrGW

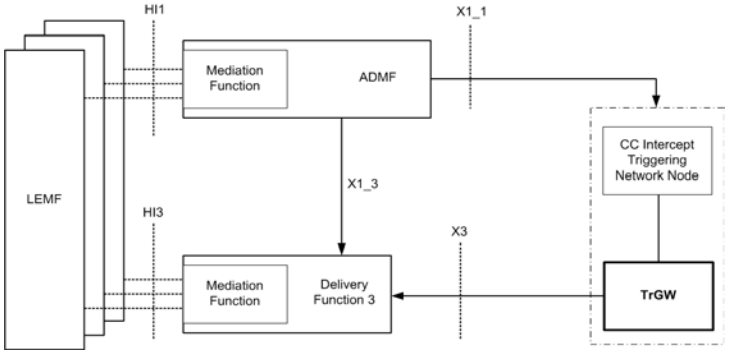

Figure 1j: In IM-MGW

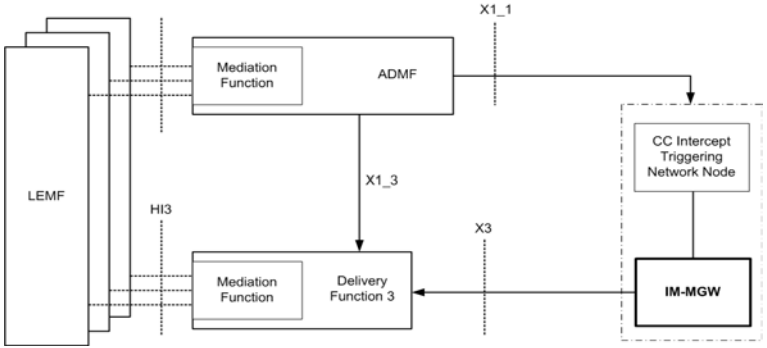

Drawn by N. Rao

New Clause Y (Option 3, Option 4 & Option 5)

Figure Y1: VoIP CC Interception and Delivery – an overview

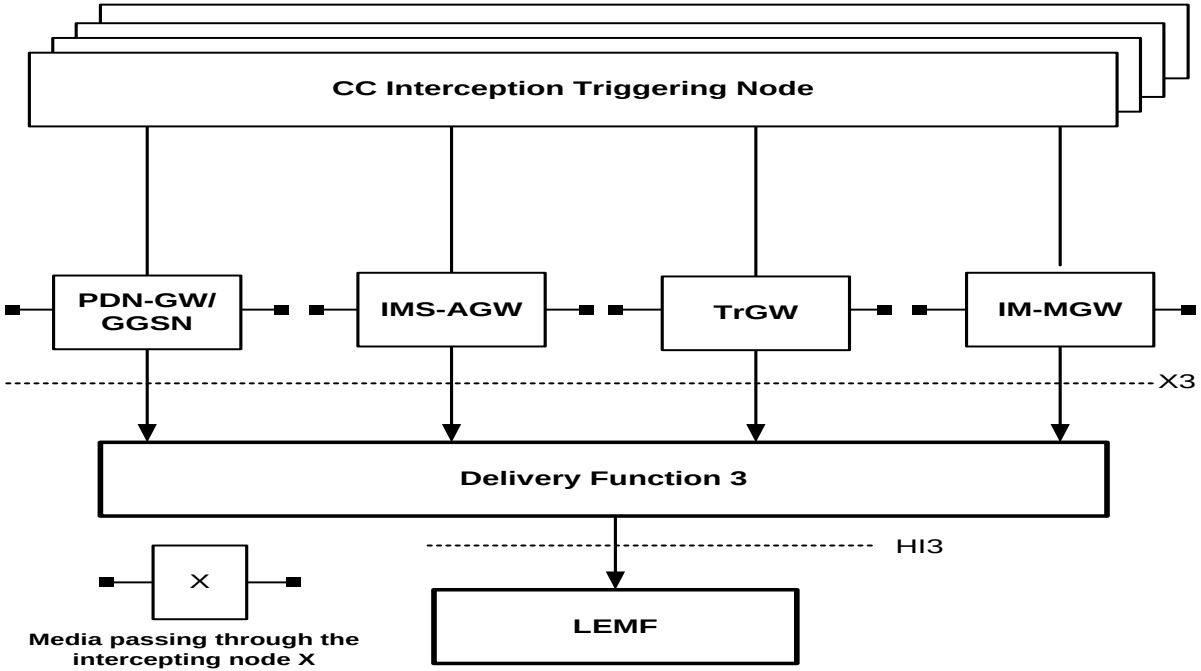

Drawn by N. Rao

New Clause Y (Option 3, Option 4 & Option 5)

Figure Y2 & Y3: VoIP CC Interception at the IMS-AGW

Figure Y2: For basic calls

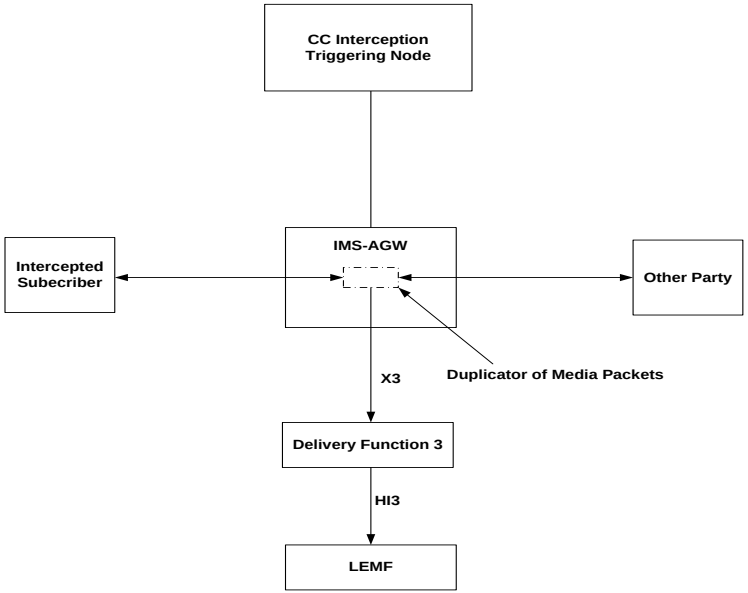

Figure Y3: For intra-CSP forwarded calls

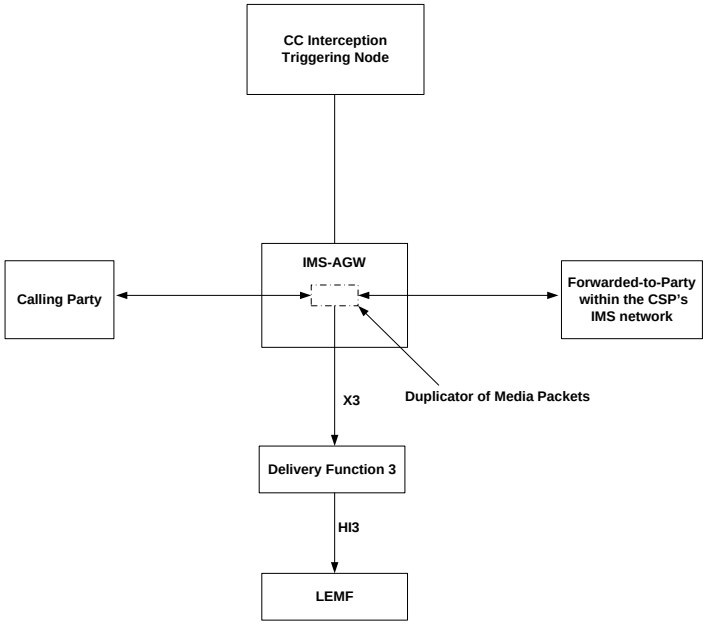

Drawn by N. Rao

New Clause Y (Option 3, Option 4 & Option 5)

Figure Y4 & Y5: VoIP CC Interception at the PDN-GW/GGSN

Figure Y4: For basic calls

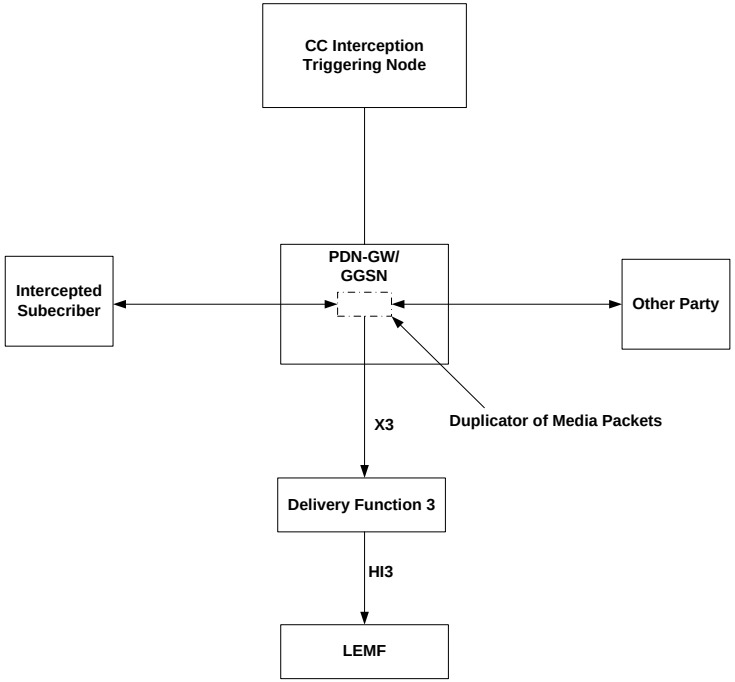

Figure Y5: For intra-CSP forwarded calls

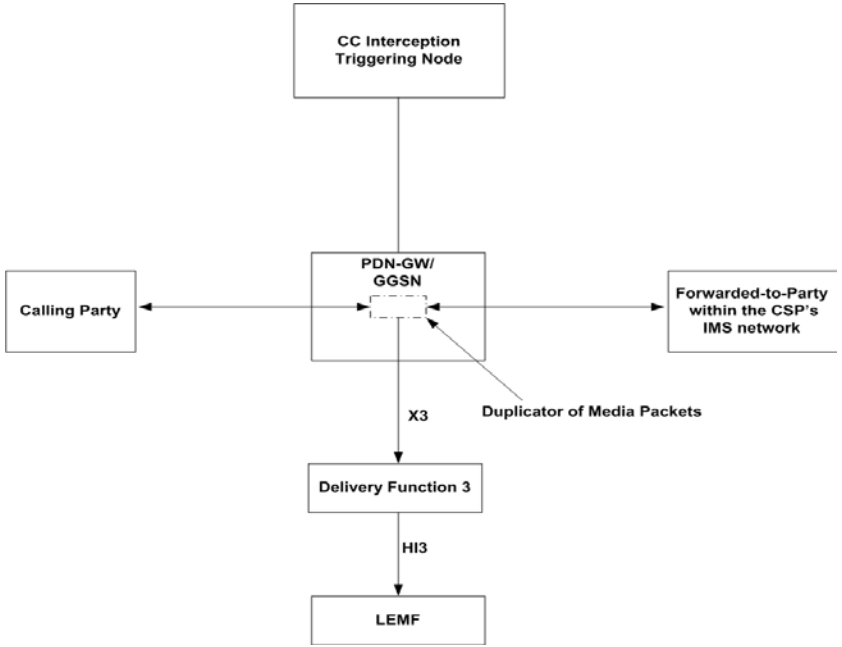

Drawn by N. Rao

New Clause Y (Option 3, Option 4 & Option 5)

Figure Y6 & Y7 & Y8: VoIP CC Interception at the TrGW & IM-MGW

@TrGW

@IM-MGW

Figure Y6: inter-CSP forwarded calls

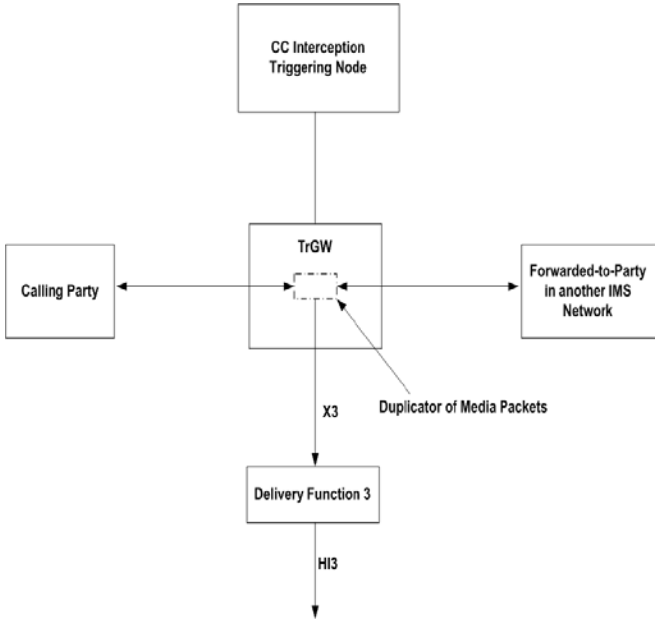

Figure Y7: IMS Roaming Scenario

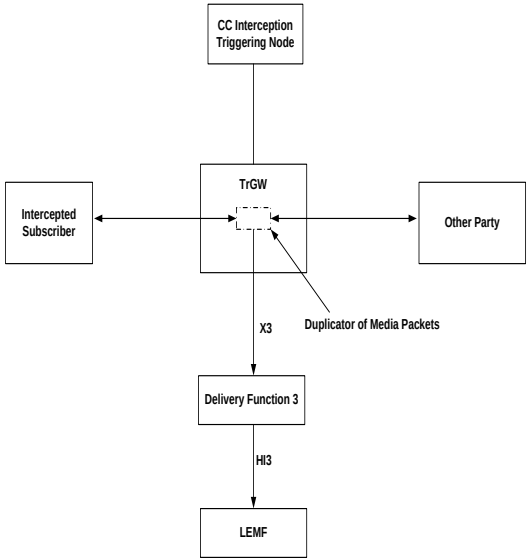

Figure Y8: inter-CSP forwarded calls

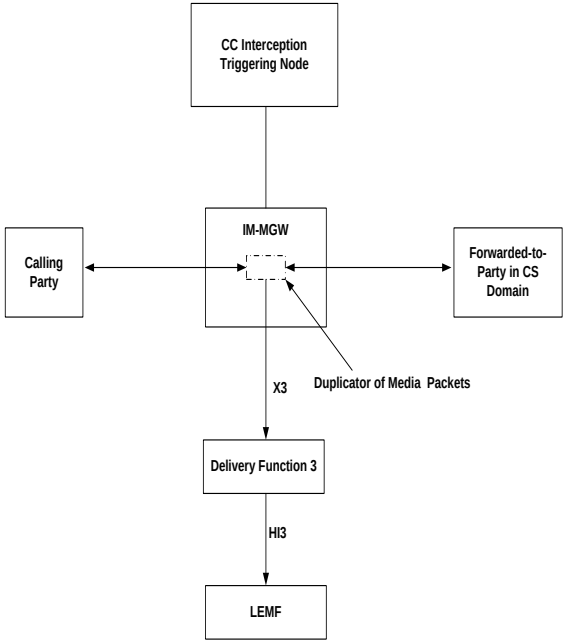

Drawn by N. Rao

Option 6
Alternate Approach

Drawn by N. Rao

Clause 4 (Option 6)

Figure 1g: VoIP CC Interception Configuration

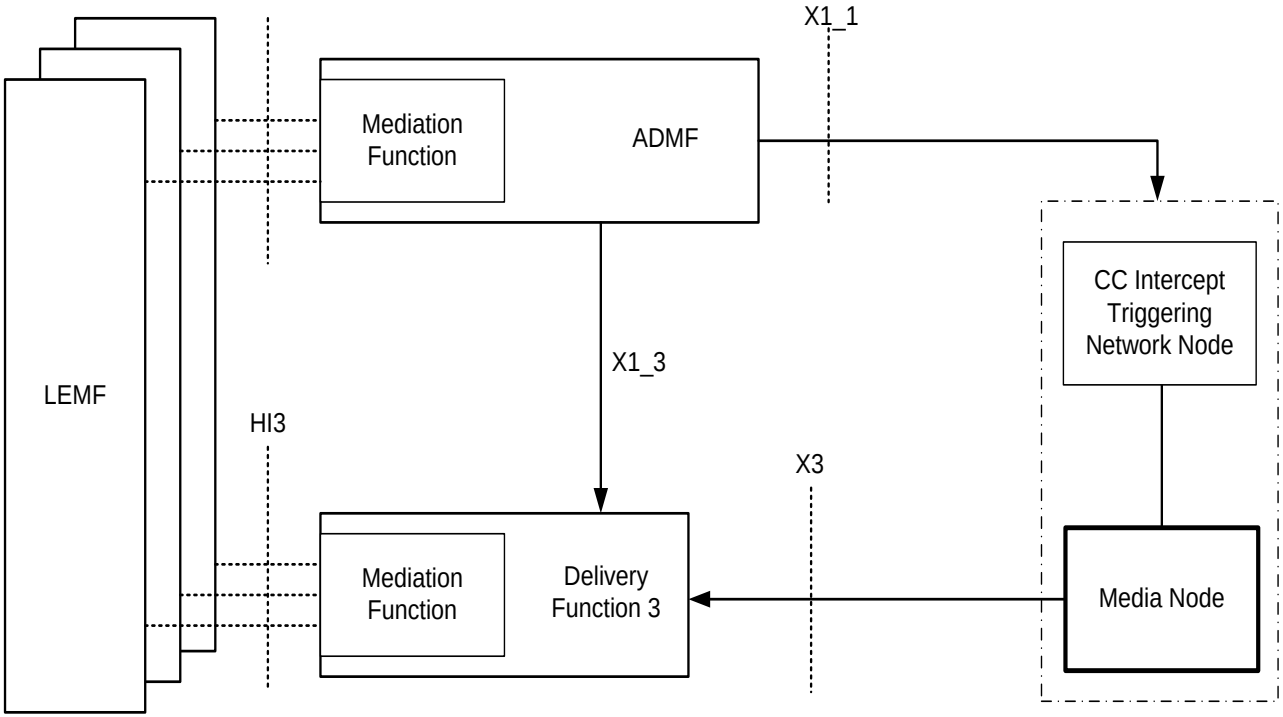

Drawn by N. Rao

New Clause Y (Option 6)

Figure Y1 & Y2

Figure Y1: VoIP CC Intercept Configuration for Basic Calls

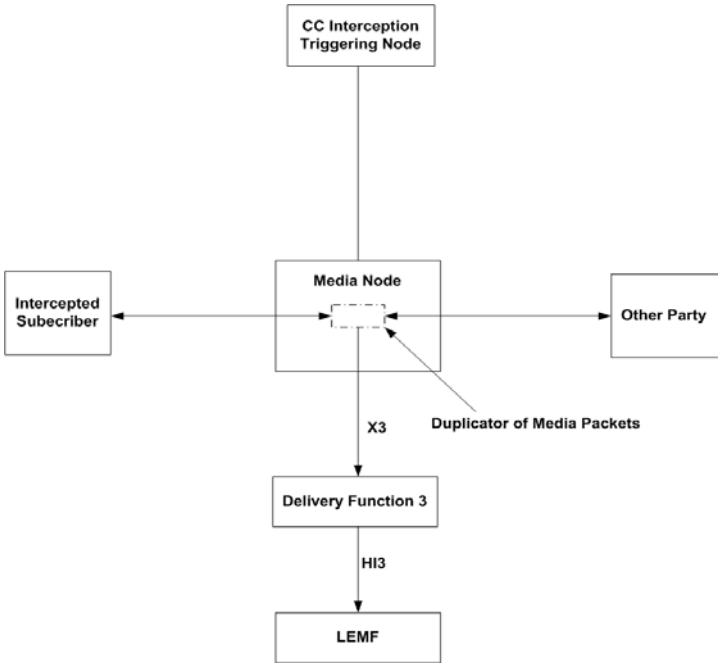

Figure Y2: VoIP CC Intercept Configuration for Forwarded Calls

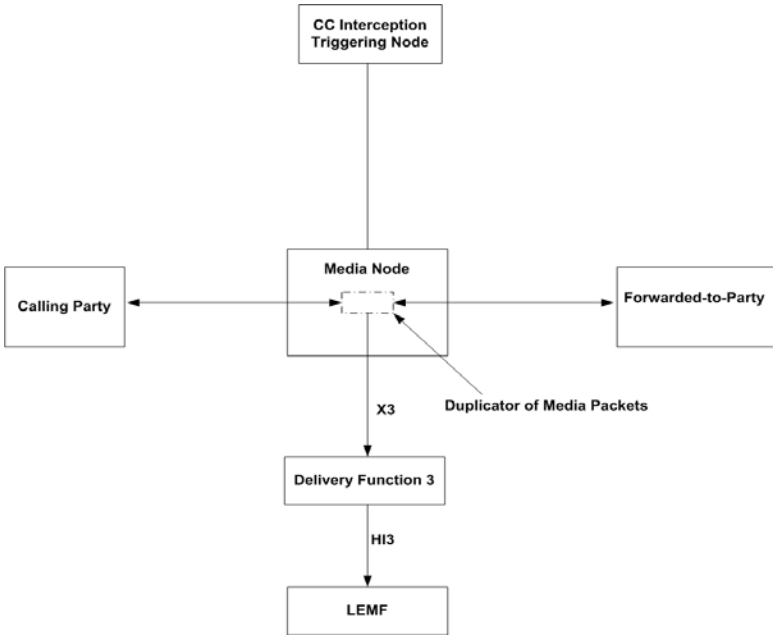

Drawn by N. Rao

New Clause Y (Option 6)

Figure Y3 & Y4: VoIP CC Interception at the Packet Core (PDN-GW/GGSN)

Figure Y3: For Basic Calls

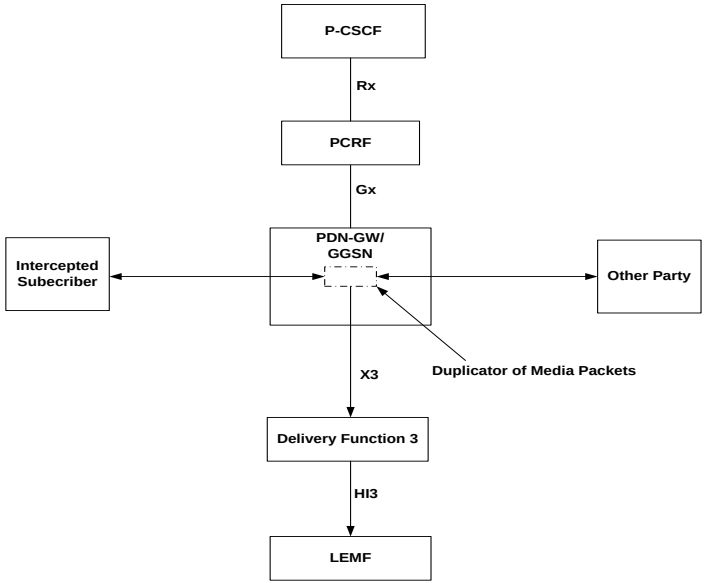

Figure Y4: For intra-CSP Forwarded Calls

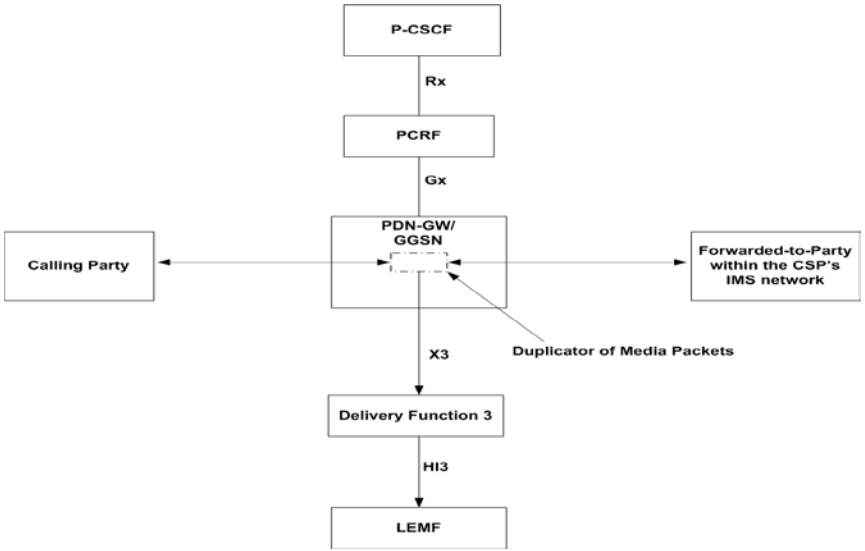

Drawn by N. Rao

Informative Annex
(All Options)

Informative Annex Z

Figure Z.1: : IMS-based VoIP Configuration

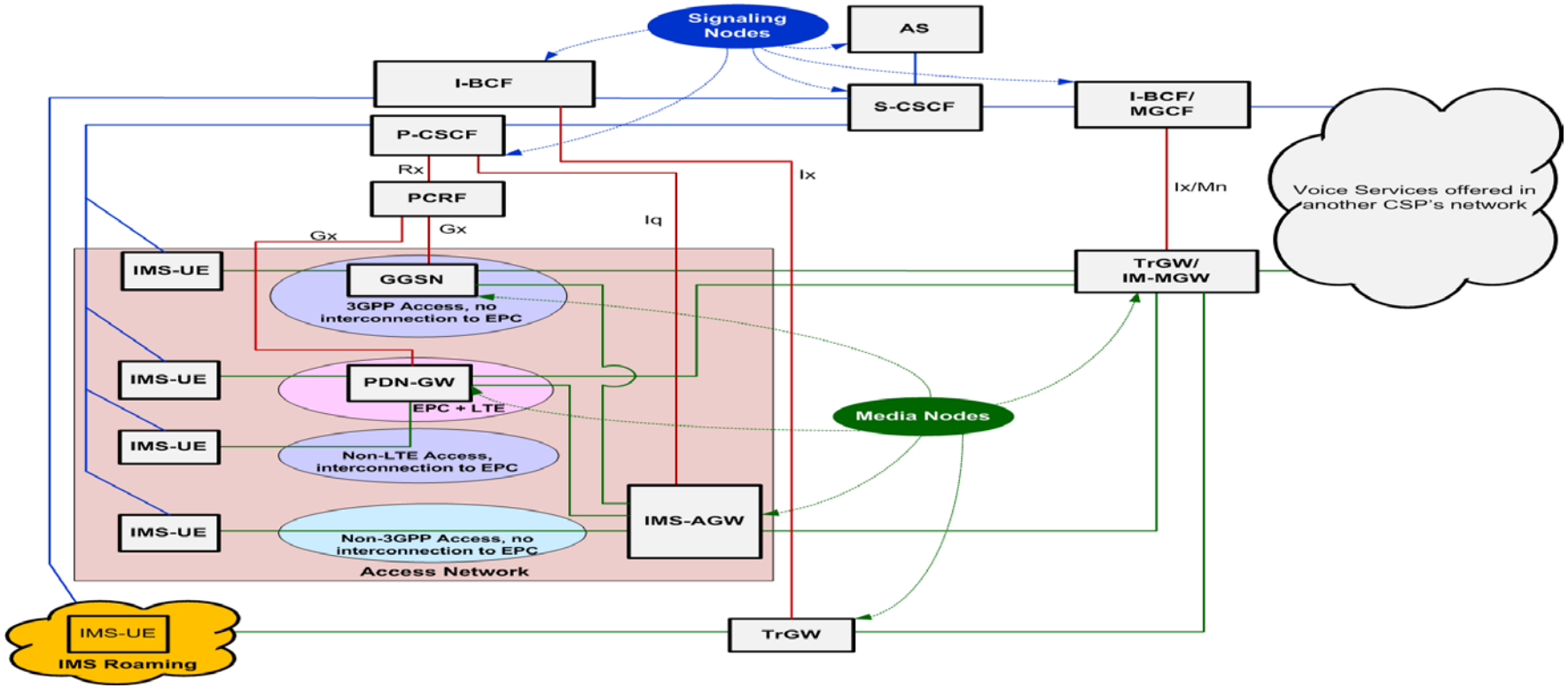

Drawn by N. Rao

Informative Annex Z

Figure Z.2: : General Principles of VoIP Configuration

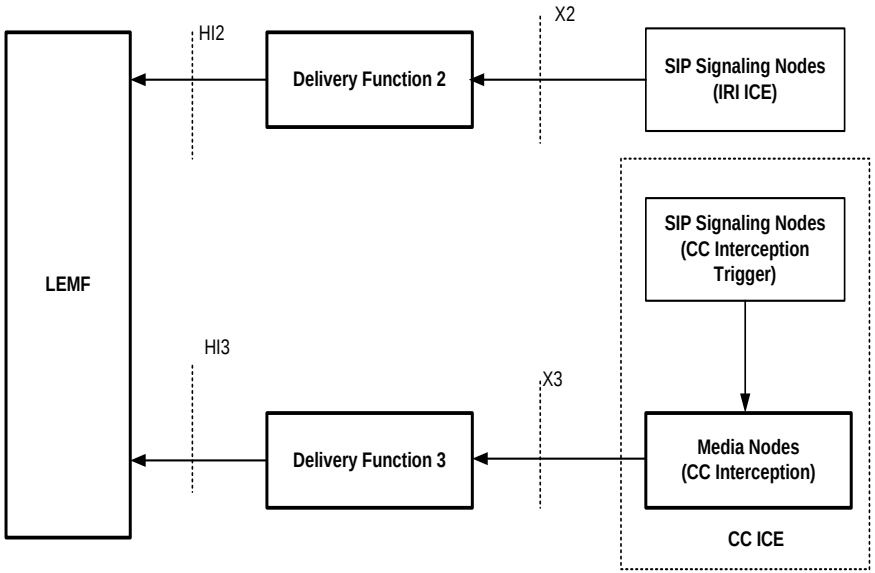

Drawn by N. Rao

Informative Annex Z

Figure Z.3: VoIP lawful interception for an originating call with CC interception at the PDN-GW/GGSN

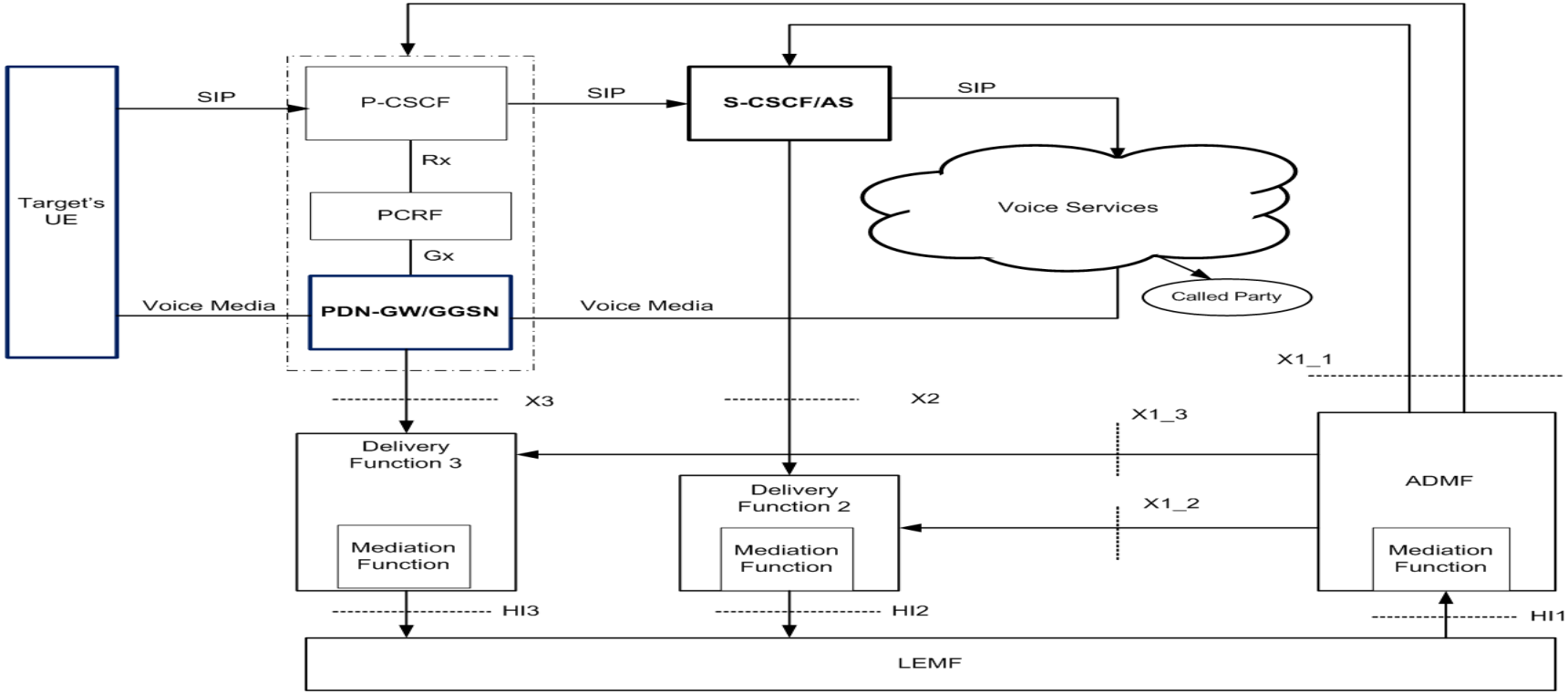

Drawn by N. Rao

Informative Annex Z

Figure Z.4: VoIP lawful interception for an originating call with CC interception at the IMS-AGW

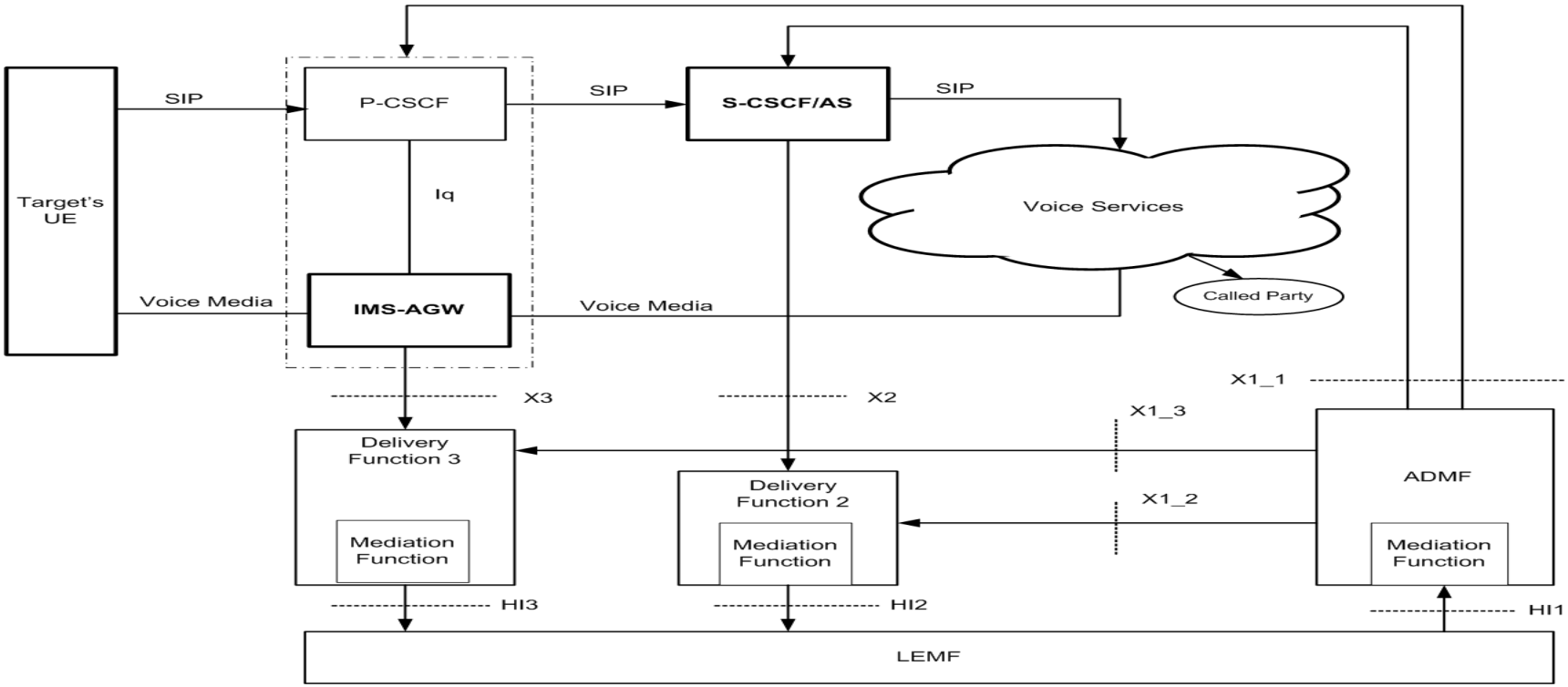

Drawn by N. Rao

Informative Annex Z

Figure Z.5: VoIP lawful interception for a terminating call with CC interception at the PDN-GW/GGSN

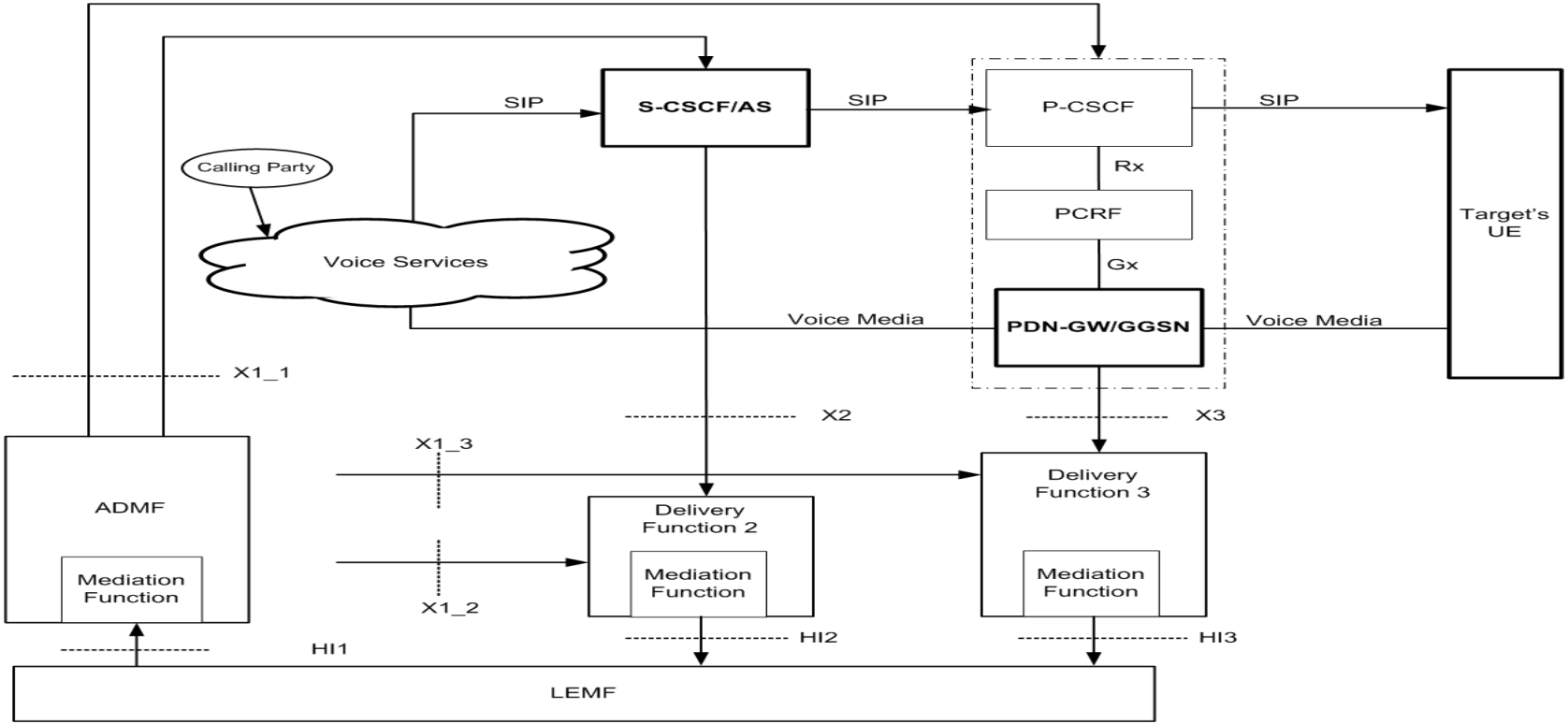

Drawn by N. Rao

Informative Annex Z

Figure Z.6: VoIP lawful interception for a terminating call with CC interception at the IMS-AGW

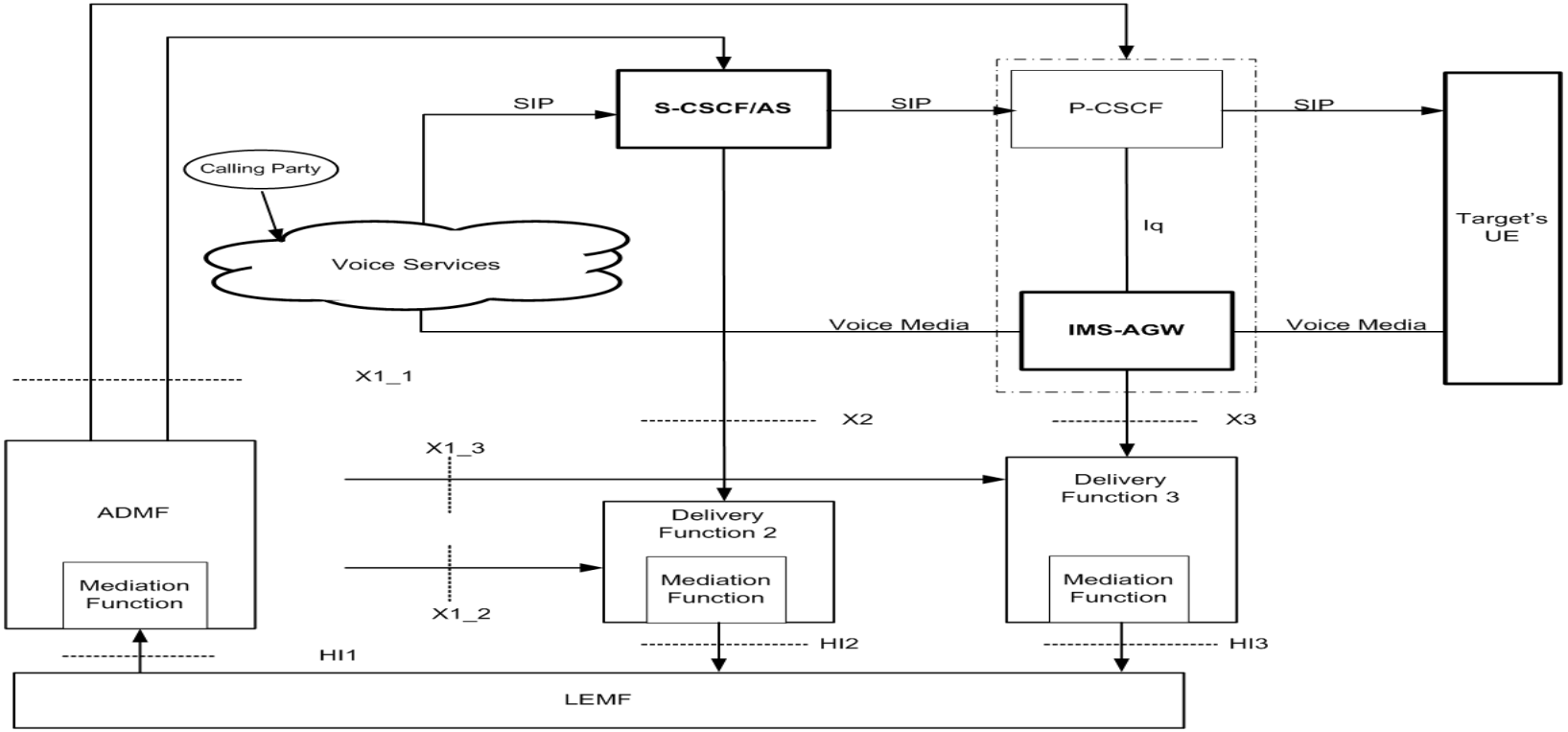

Drawn by N. Rao

Informative Annex Z

Figure Z.7: VoIP lawful interception for an intra-CSP forwarded call with CC interception at the PDN-GW/GGSN

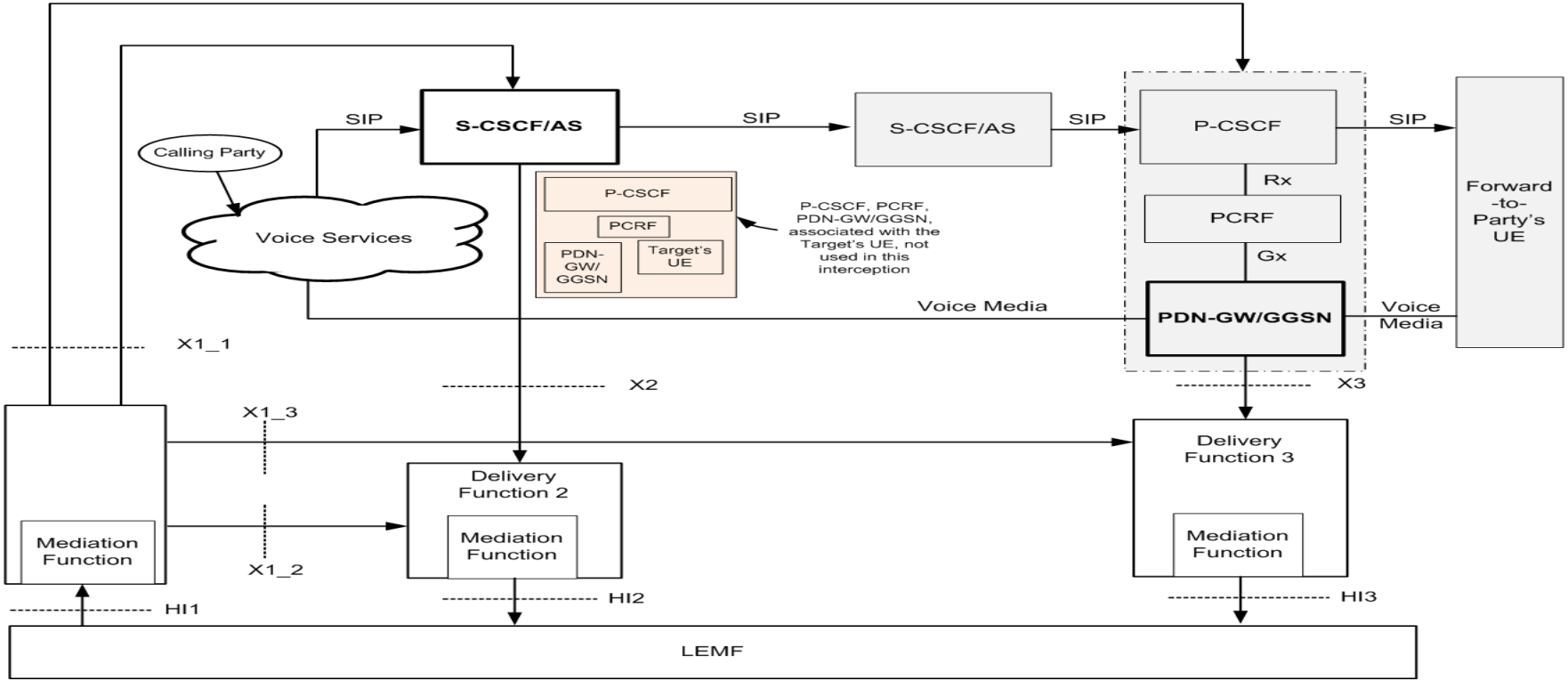

Drawn by N. Rao

Informative Annex Z

Figure Z.8: VoIP lawful interception for an intra-CSP forwarded call with CC interception at the IMS-AGW

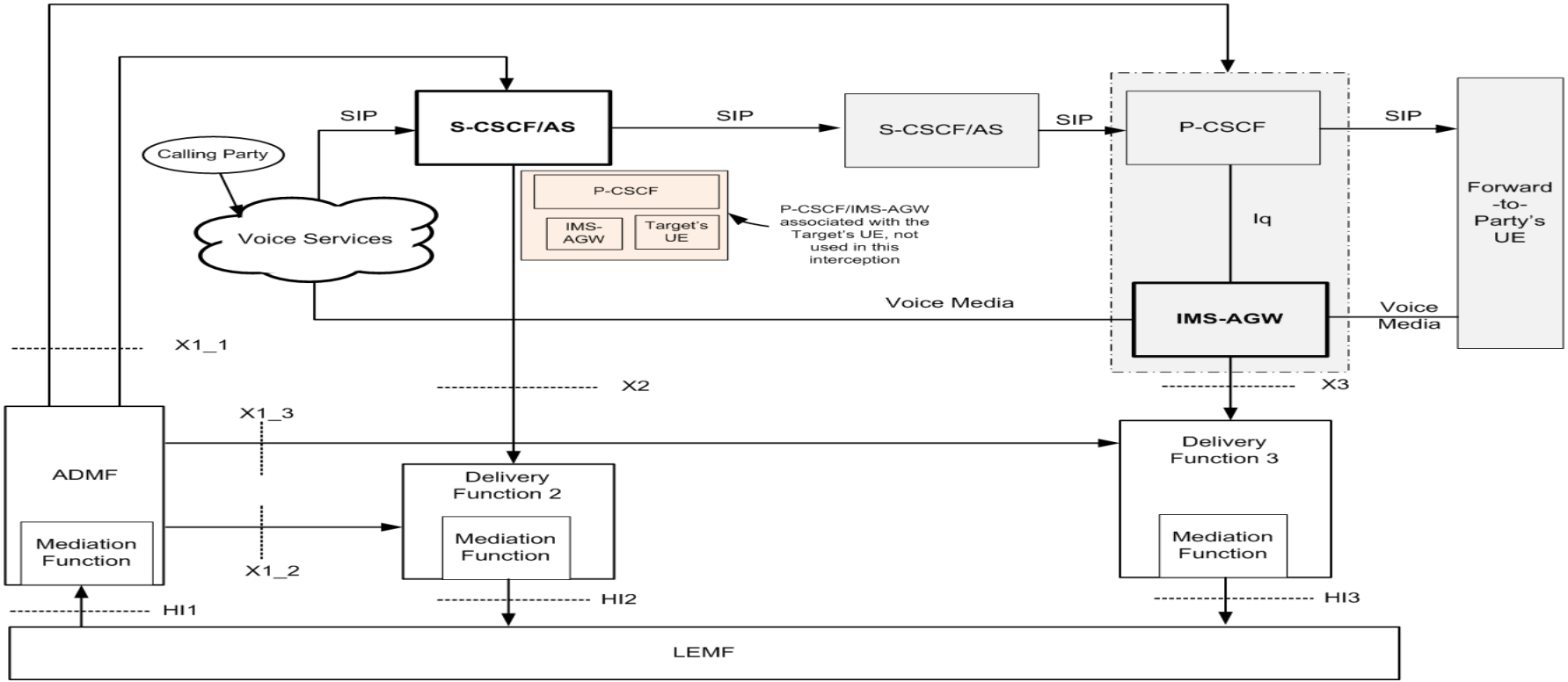

Drawn by N. Rao

Informative Annex Z

Figure Z.9: VoIP lawful interception for an inter-CSP forwarded call with CC interception at the IM-MGW

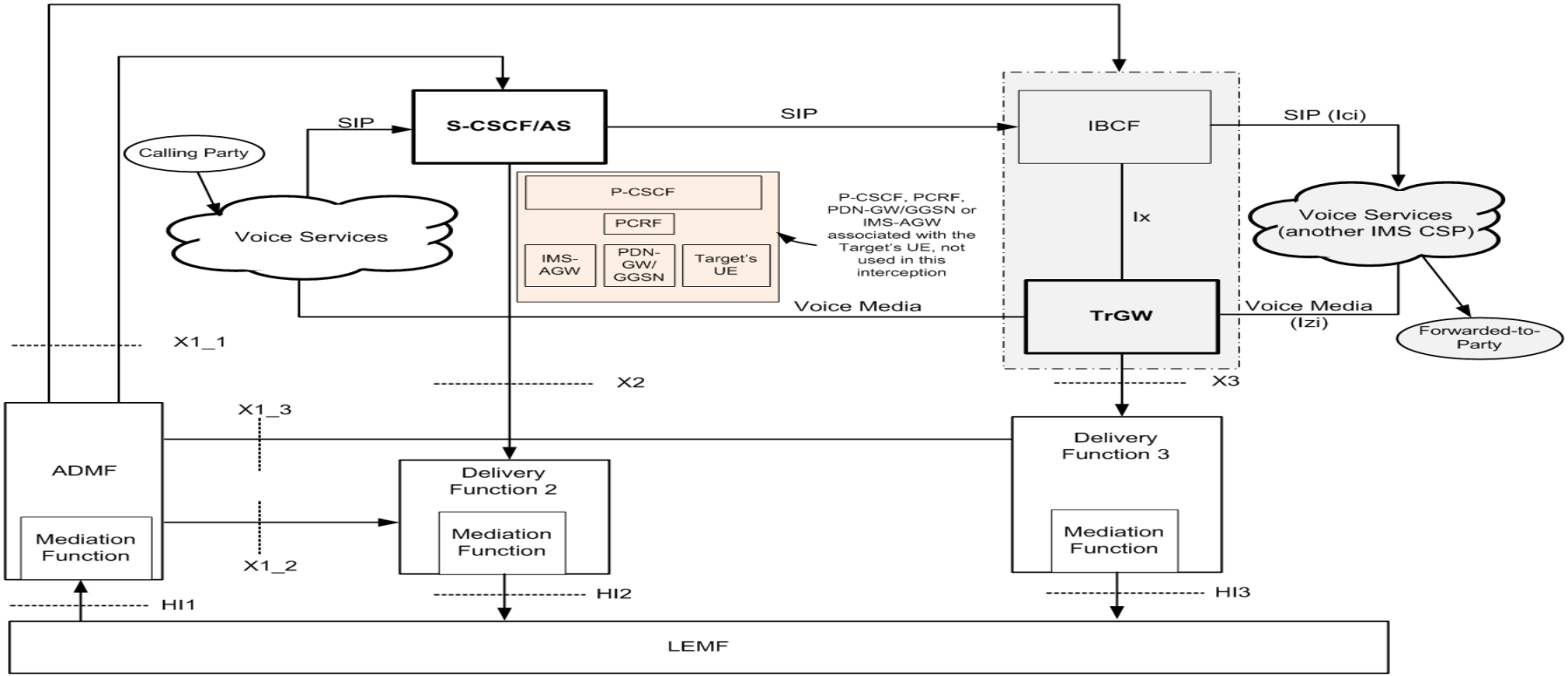

Drawn by N. Rao

Informative Annex Z

Figure Z.10: VoIP lawful interception for an inter-CSP forwarded call with CC interception at the TrGW

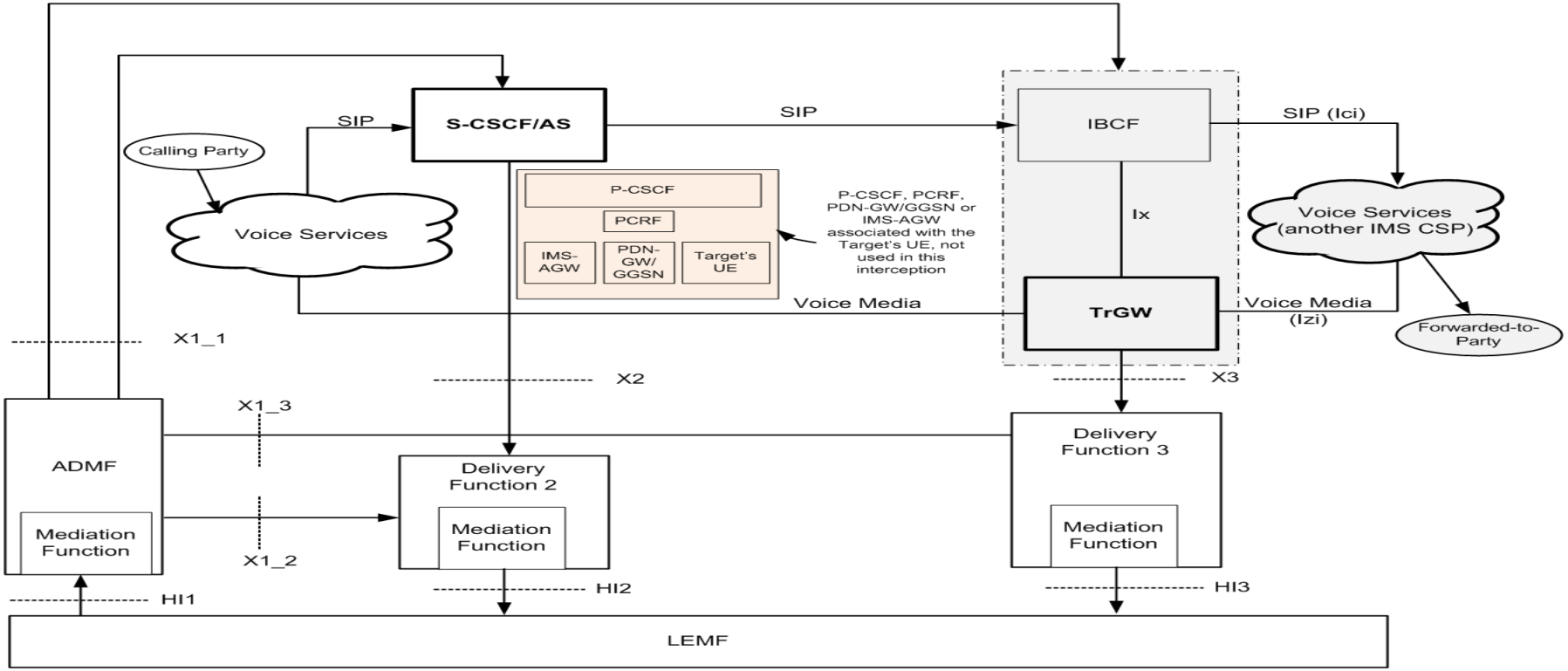

Drawn by N. Rao

Informative Annex Z

Figure Z.11: VoIP lawful interception for an originating call with IMS Roaming

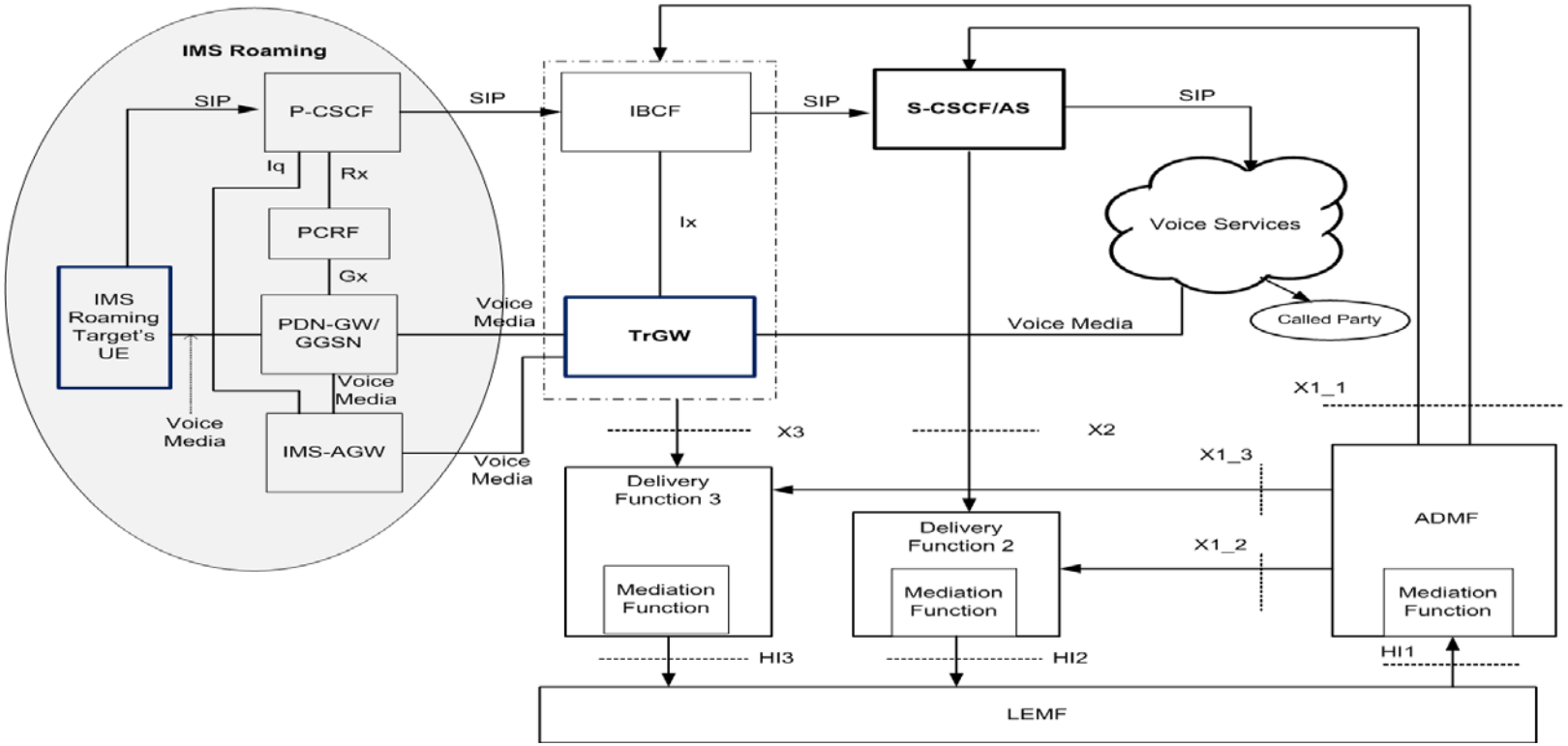

Drawn by N. Rao

Informative Annex Z

Figure Z.12: VoIP lawful interception for a terminating call with IMS Roaming

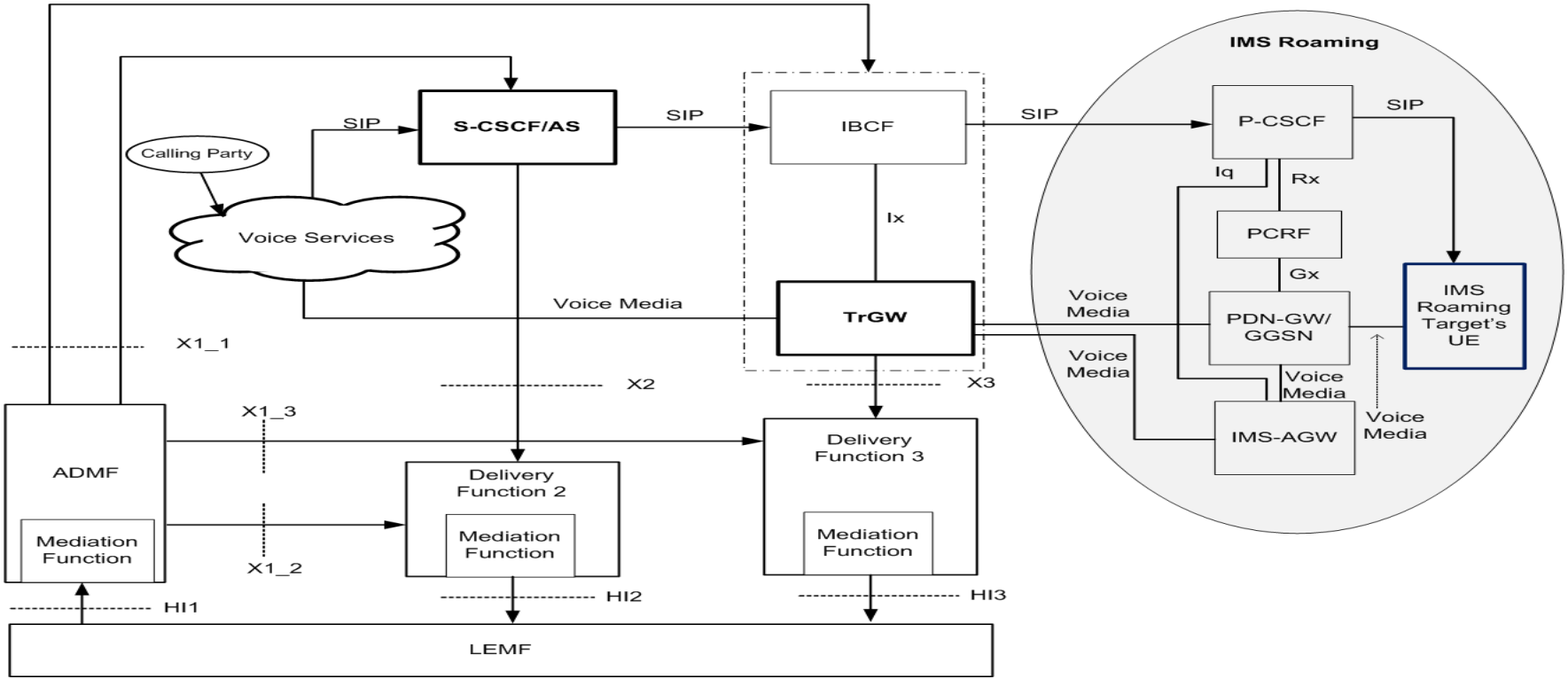

Drawn by N. Rao

Informative Annex Z

Figure Z.13: VoIP lawful interception for an intra-CSP forwarded call with IMS Roaming

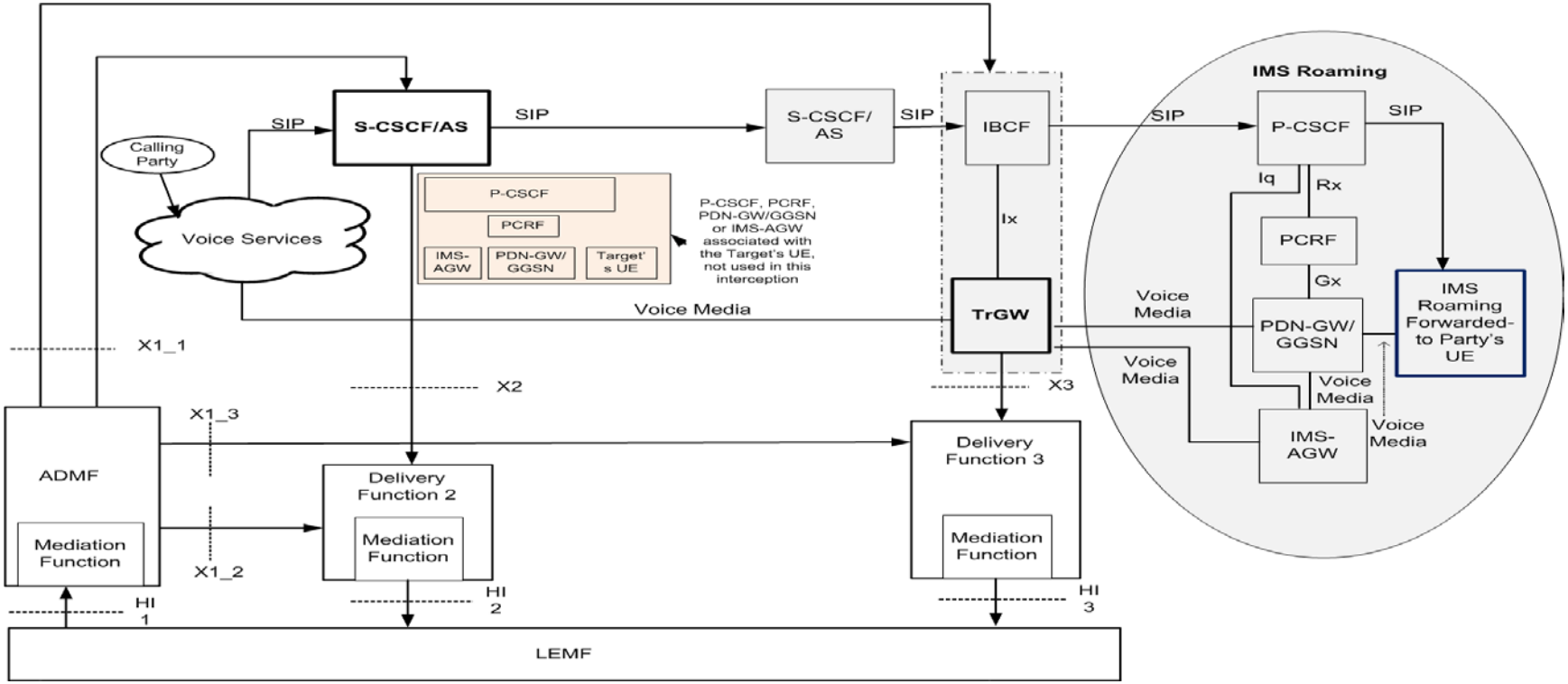

Drawn by N. Rao

Summary

Drawn by N. Rao

Discussion Points

1. Which one of the 6 options is used ?

   Points to Note:

   a) Option 1, if chosen, then SA3LI14_006_VoIP-LI (option 1 - with labels for the reference points) will have to be used.
   b) Option 2, if chosen, then SA3LI14_006_VoIP-LI (option2 - Option 1 without the labels to the reference points) will have to be used.
   c) Option 3, if chosen, then SA3LI14_006_VoIP-LI (option 3 - Abstract Level – approach 1) will have to be used.
   d) Option 4, if chosen, then SA3LI14_006_VoIP-LI (option 4 - Abstract Level – approach 2) will have to be used.
   e) Option 5, if chosen, then SA3LI14_006_VoIP-LI (option 5 - Abstract Level – approach 3) will have to be used.
   f) Option 6, if chosen, then SA3LI14_006_VoIP-LI (option 6 - Alternate Approach) will have to be used.

   a) Should the reference points between the CC interception trigger nodes and the media nodes that perform the CC interface be standardized?

      Points to note:

      a) Reference Point Mc (Figure 1a) between MSC Server/GMSC Server and MGW is not standardized.
      b) Unlabelled Reference Point (Figure 1f) between MRFC and MRFP are not standardized.

2. If one of the first 2 options (Option 1, 2, 3) is chosen, should the Figure 1d be deleted from clause 4 of 33.107?

   Points to note:

   a) Figure 1g and 1h show the X2 and HI2 for IMS; Figure 1d shows the same.
   b) But, Figure 1g and 1h show AS as an IRI GCE; Figure 1d does not show AS as an IRI GCE.

3. Arguments:

   a) 3GPP TS 33.107 identifies the network element that provides the interception. The diagrams of option 1 and option 2 are in the same line of thinking for both CC Interception Triggering Node and the node that performs the CC interception. Option 3, 4 ad 5 identify the CC interception node, but abstractive as far as the CC Interception Triggering Node is concerned.
   b) Identifying the reference points will allow 3GPP SA3LI to write liaisons to other TSGs to standardize the respective reference points.