Proposed way forward for the LTE specific open issues for LIPA with local PDN connection

Nortel

Abstract

- The LIPA solution with local PDN connection currently has the following open issues in 23.830 clause 6.3.9.2.2.2:
  - Location, number and possible subset of S-GW functions (two S-GWs (in HeNB and core network) vs. one S-GW with relocation)
  - S11 interface to the HeNB to manage bearer setup for LIPA
- In this contribution it is proposed to:
  - Keep the principles of the existing EPS architecture i.e. one SGW and one S11 interface
  - Focus on the SGW relocation issue and analyse how it could be optimised i.e.:
    - Avoid frequent usage of relocation while still providing for streamlined transport (e.g. by avoiding traffic tromboning)

Scenarios

- What follows is analysis of three LIPA scenarios based on the architecture with single SGW (as originally proposed in S2-092301 and S2-092355 in Hangzhou)
- It is assumed that the local PDN connection is preserved when the UE performs handover away from the HeNB subsystem
  - Strictly speaking this is not a Stage 1 requirement
  - However, in our opinion preserving the LIPA PDN connection would greatly improve the user's experience in spotty home coverage
  - Worth noting is that handling of femto-macro mobility in the architecture with single SGW comes for free (because it re-uses basic EPS mobility mechanisms) and also is forward compatible with the Managed Remote access feature (which was postponed to Rel-10)
- The analysis shows that depending on the number of established PDN connections (e.g. only local PDN, only external PDN, or both a local and an external PDN) as well as the UE's mode (Active, Idle), the optimal location of the Serving GW (SGW) may reside inside or outside the user's home, as described in the next three charts

Scenario #1: two PDN connections (1/2)

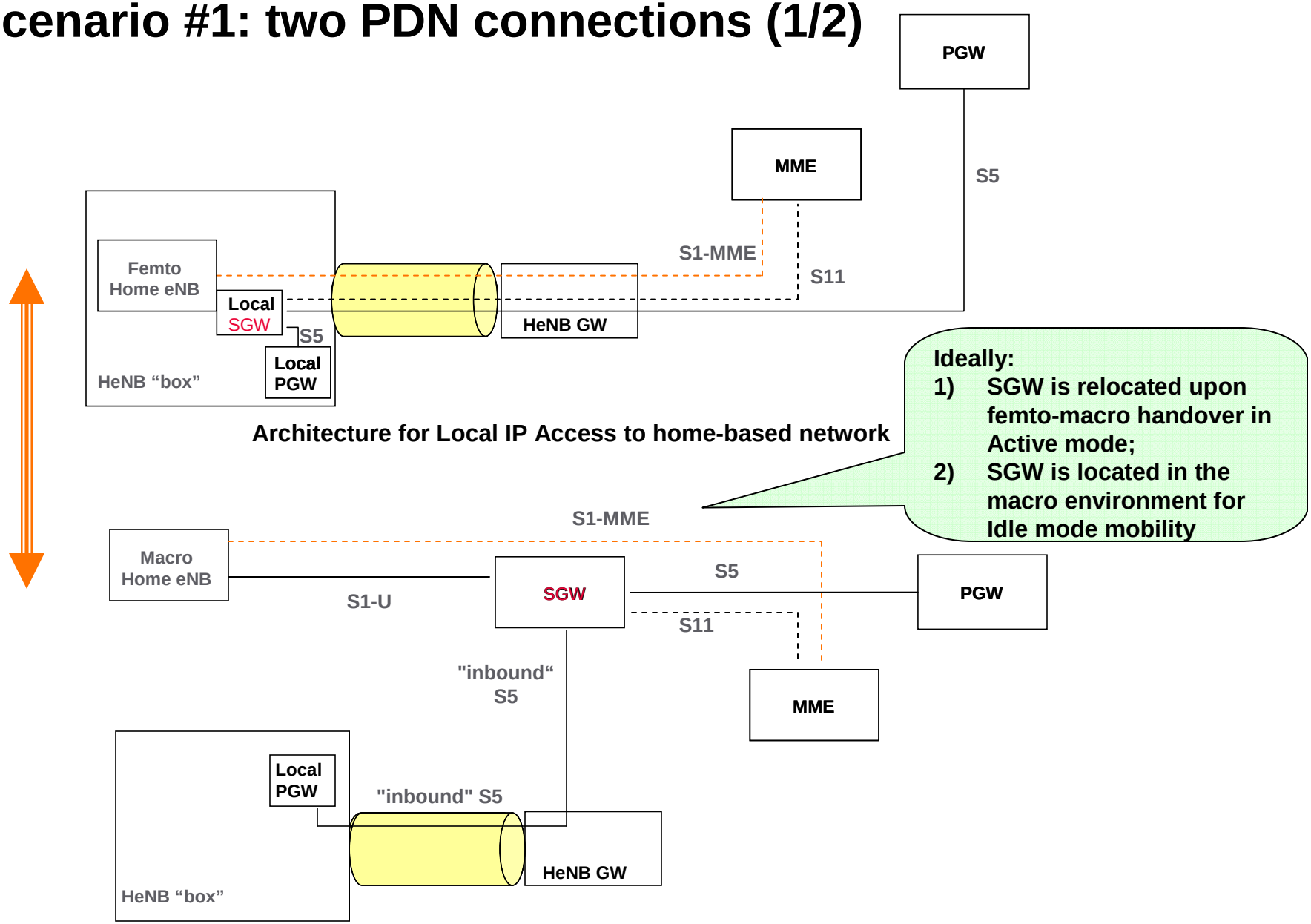

Architecture for Local IP Access to home-based network

After UE performs a handover away from the HeNB subsystem

Scenario #1: two PDN connections (2/2)

- Scenario with one local PDN connection and one external PDN connection:
  - When the UE is in the home (upper part of the previous chart), the optimal location for the SGW is in the home;
  - When the UE moves to the macro environment (lower part of the previous chart), the optimum location of the SGW is in the macro network in order to avoid unnecessary traffic tromboning for the external PDN connection
  - If the femto to/from macro mobility is performed while UE is in Active mode, the SGW relocation can be achieved via existing 3GPP procedures
- However, if the femto to/from macro mobility is performed while UE is in Idle mode (and assuming the femto and macro environments share a common Tracking Area), the SGW remains in the environment where the mobile was last active
  - Given that in Idle mode the MME does not know whether the UE is inside or outside the home, it may be desirable to have the SGW in the macro environment (e.g. because the macro SGW is more reliable node than the local SGW)
- Possible optimisation:
  - The MME may initiate SGW relocation towards the macro environment when the UE is moved to Idle mode while in the home

Scenario #2: External PDN connection only (1/2)

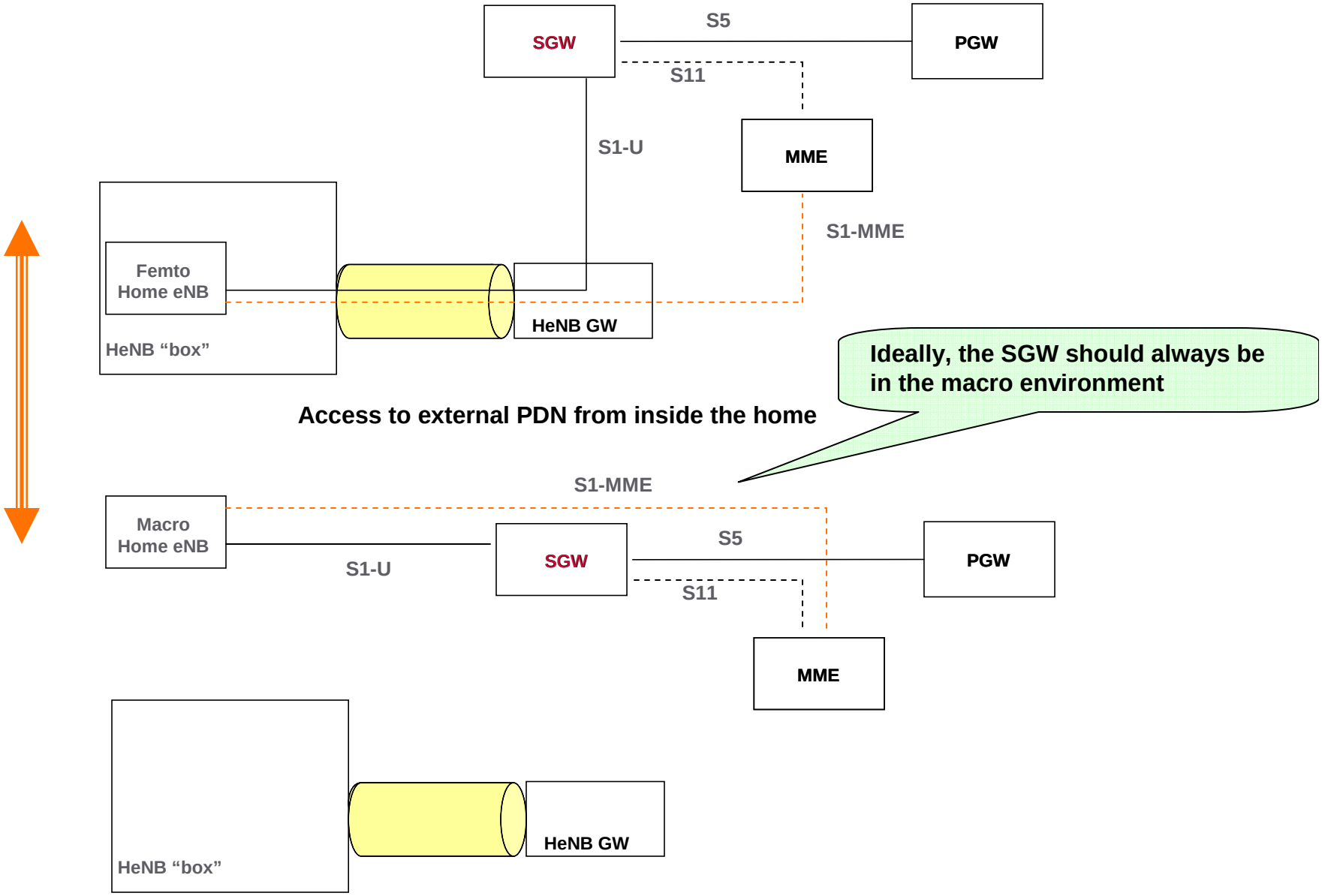

After UE performs a handover away from the HeNB subsystem

Scenario #2: External PDN connection only (2/2)

- Scenario with an external PDN connection only:
  - When the user is in the home (upper part of the previous chart), from perspective of transport optimisations it is irrelevant whether the SGW is inside or outside the home
  - When the user is outside the home (lower part of the previous chart), the SGW should clearly better be in the macro environment, in order to avoid traffic tromboning
  - In order to avoid frequent SGW relocations in case of patchy home coverage, it is assumed that the *overall* optimal SGW location in this scenario is the macro environment, regardless whether the user is inside or outside the home
- However, when the user activates a local PDN connection in addition to the external PDN connection, it may be desirable to relocate the SGW inside the user's home, in order to avoid traffic tromboning for the local PDN connection
- Similarly, when the user de-activates the local PDN connection while still engaged in an external PDN connection, it may be desirable to relocate the SGW outside the user's home, in order to avoid frequent relocations in case of patchy home coverage
- Possible optimisations:
  - MME may initiate SGW relocation towards the home when the UE activates a local PDN connection while in the home
  - MME may initiate SGW relocation towards the macro environment when the UE de-activates a local PDN connection while in the home

Scenario #3: Local PDN connection only (1/2)

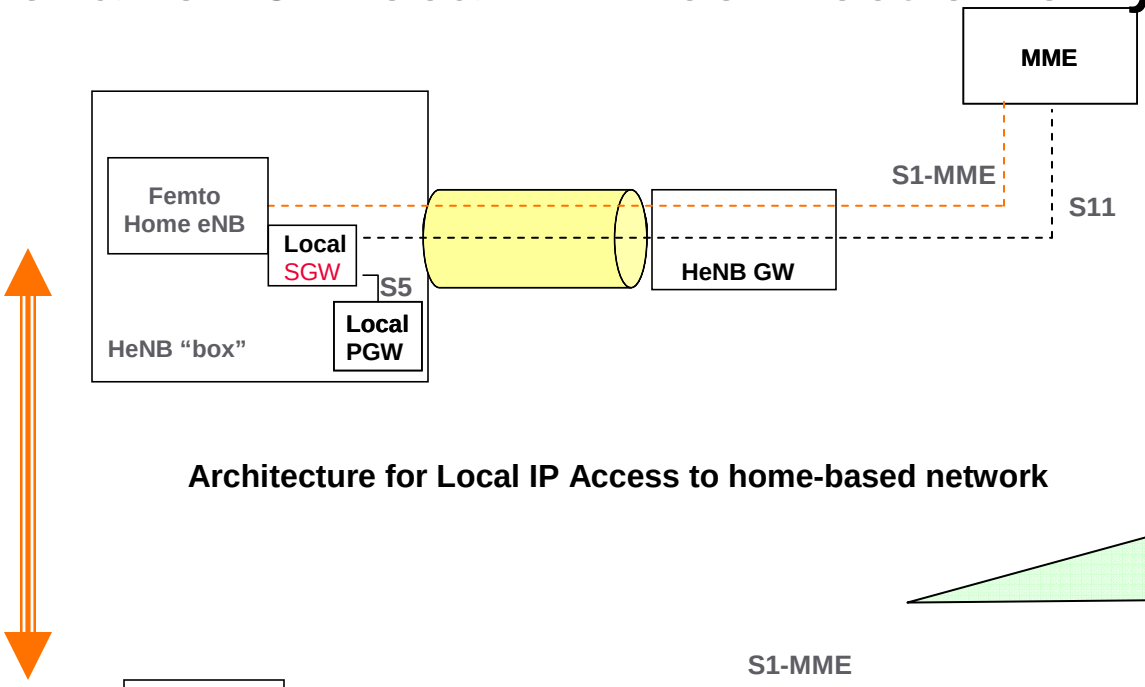

Architecture for Local IP Access to home-based network

Again, ideally:
1) **SGW is relocated upon femto-macro handover in Active mode;**
2) **SGW is located in the macro environment for Idle mode mobility**

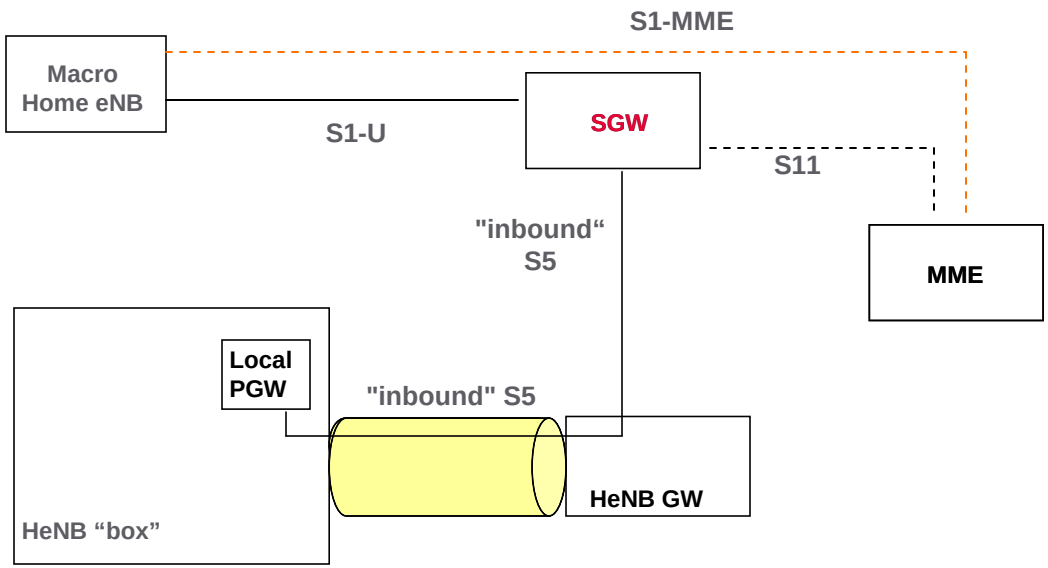

After UE performs a handover away from the HeNB subsystem

Scenario #3: Local PDN connection only (2/2)

- Scenario with one local PDN connection only:
  - When the UE is in the home (upper part of the previous chart), the optimal location for the SGW is in the home;
  - When the UE is outside the home (lower part of the previous chart), from perspective of transport optimisation it is irrelevant whether the SGW is located inside or outside the home
    - However, in order to avoid the definition of an “inbound S1-U” interface, it may be desirable to have the SGW in the macro environment whenever the UE moves outside the home
- As in the previous scenarios, for Idle mode UE it may be desirable to have the SGW located in the macro environment
  - e.g. because the macro SGW is more reliable node than the local SGW
- Possible optimisation:
  - The MME may initiate SGW relocation towards the macro environment when the UE is moved to Idle mode while in the home

Summary of Possible Optimisations

- The procedures allowing for optimal SGW location that were considered in the previous charts include the following:
  - 1) When UE is moved to Idle mode while in the home, the MME may relocate the SGW towards the macro environment
    - This procedure does not seem to require any standardisation. Referring to Backup chart#1, the MME performs SGW relocation at the end of the S1 Release procedure (refer to steps 7-10)
  - 2) When UE is in Active mode and has a local PDN connection, the MME may relocate the SGW towards the home environment in order to streamline the transport
    - Relocating the SGW in Active mode without changing the eNB does not seem to be possible today. Refer to Backup chart #2 for an example procedure that would allow for such relocation (new steps 3-4)
  - 3) When UE de-activates the local PDN connection while still engaged with an external PDN connection, the MME may relocate the SGW towards the macro environment in order to avoid frequent SGW relocations due to patchy coverage
    - Same comment as in the second bullet

Summary and Proposal

- The LIPA architecture with local PDN connection should keep the existing EPS principles:
  - One SGW
  - One S11
- It was shown that the issues raised in relation to SGW relocation (notably achieving optimal SGW location while avoiding frequent SGW relocations) can be tackled with minimum standardisation
  - Most of the optimisations considered in this paper consist in modified *MME behaviour* that does not require any specification
    - Apart from stating in Stage 2 specifications that the “MME may invoke SGW relocation in order to streamline the transport, etc”
  - Only one new S1-MME transaction identified (steps 3-4 in Backup chart#2)

Backup

Backup chart #1: SGW relocation upon S1 Release

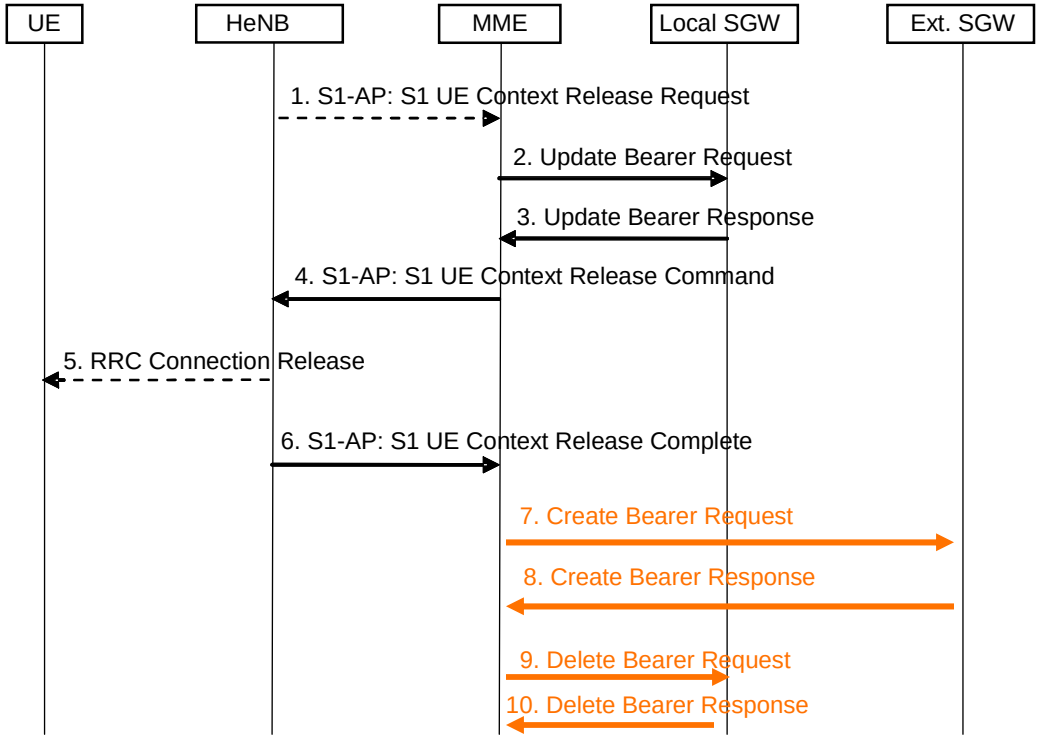

- When UE is moved to Idle mode while in the home, the MME may relocate the SGW towards the macro environment

Backup chart #2: SGW relocation in Active mode

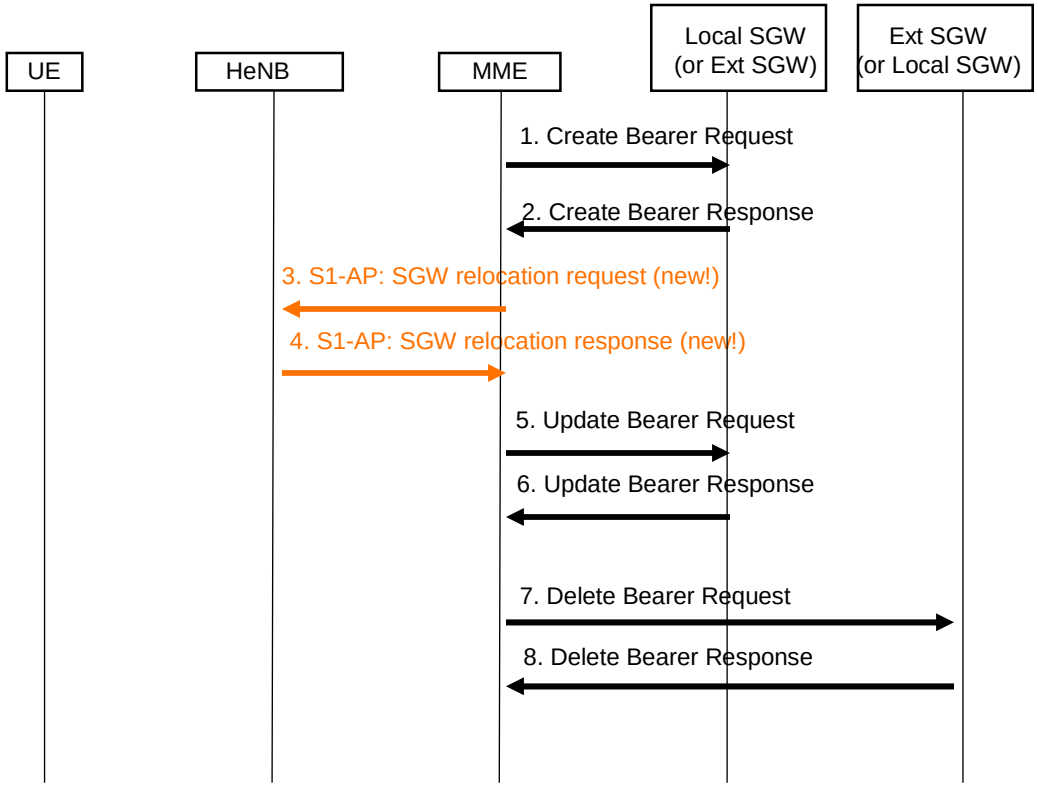

- When UE is in Active mode and has a local PDN connection, the MME may relocate the SGW towards the home environment (steps 1-8) in order to streamline the transport
- When UE de-activates the local PDN connection while still engaged with an external PDN connection, the MME may relocate the SGW towards the macro environment (steps 1-8) in order to avoid frequent SGW relocations due to patchy coverage

Backup chart #3: temporary tromboning

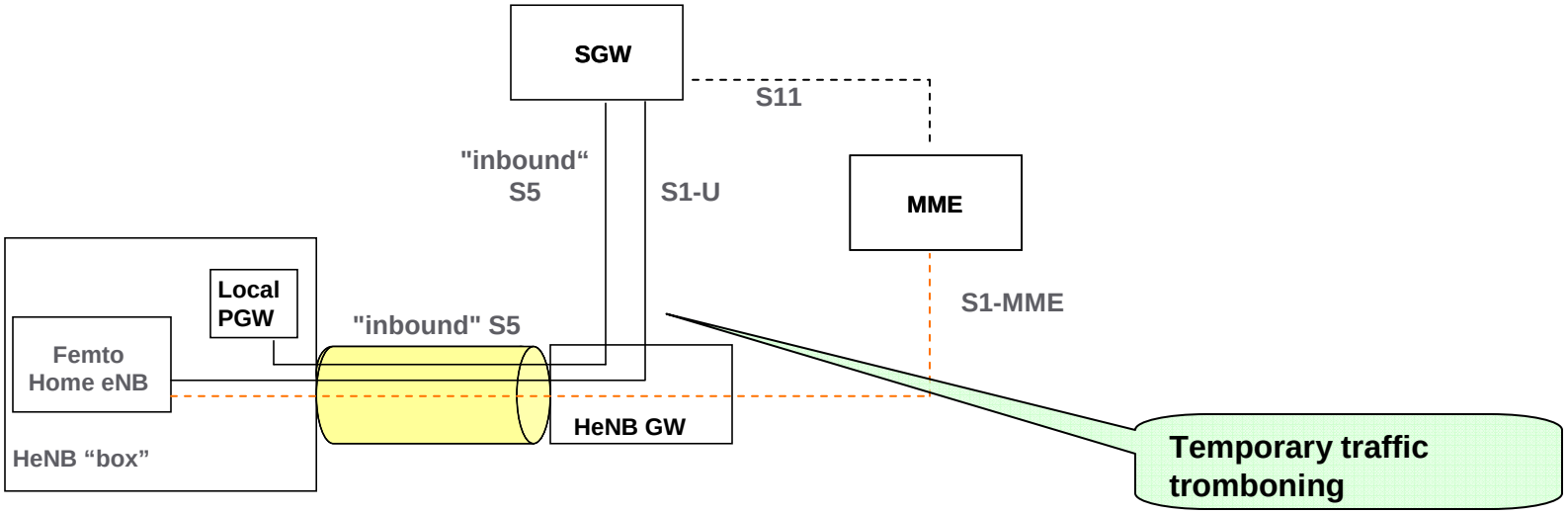

- When there is established local PDN connection, there may be a transient situation with suboptimal transport (“tromboning”). For example:
  - If the UE is brought to Active mode while the SGW is outside
  - If the MME keeps ths SGW outside in patchy home coverage in order to avoid frequent SGW relocations
- In either case the MME can streamline the traffic by invoking a SGW relocation (outside of any radio handover procedure)