S2-2306693

DualSteer study item proposal: supporting material

MA PDU sessions with dual 3GPP access paths

Qualcomm Incorporated, CableLabs, Lockheed Martin, Futurewei, Thales, Novamint, NEC, SyncTechno Inc.

© 3GPP 2019

Motivation: limitations of ATSSS

- Currently one 3GPP access and (at least) one integrated non-3GPP access are required to support ATSSS
- In certain use cases, non-3GPP access(es) are not ideal to improve capacity, coverage, reliability and QoE, e.g. (see slide #4):
  - stadium with SNPN or local PLMN deployment
  - 3GPP terrestrial combined with 3GPP non-terrestrial access

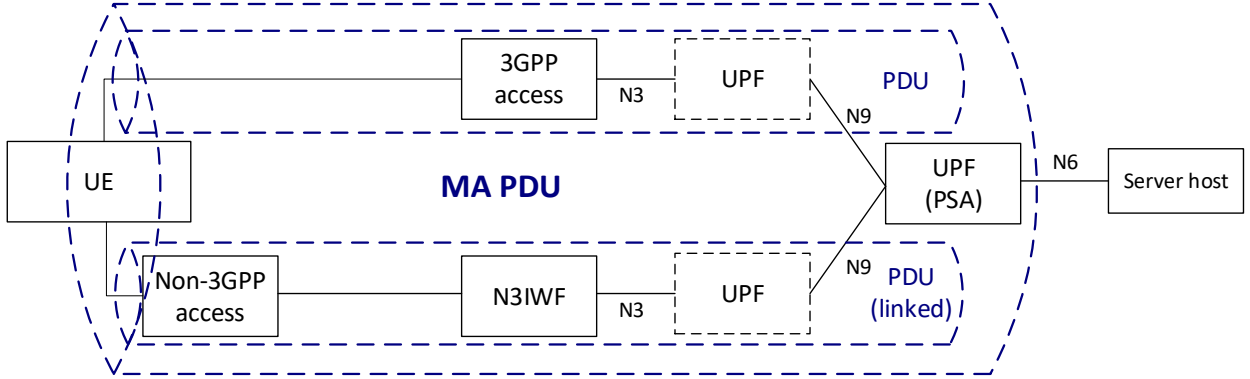

ATSSS requires (at least) one integrated non-3GPP access to work

© 3GPP 2019

Motivation: proposition

- Enable additional 5GS tools, under MNO control/policy, to improve access/NW resources utilization, capacity, coverage, reliability and QoE, using **dual 3GPP access**
- Provide flexible user plane traffic aggregation, steering & switching at 3GPP layer

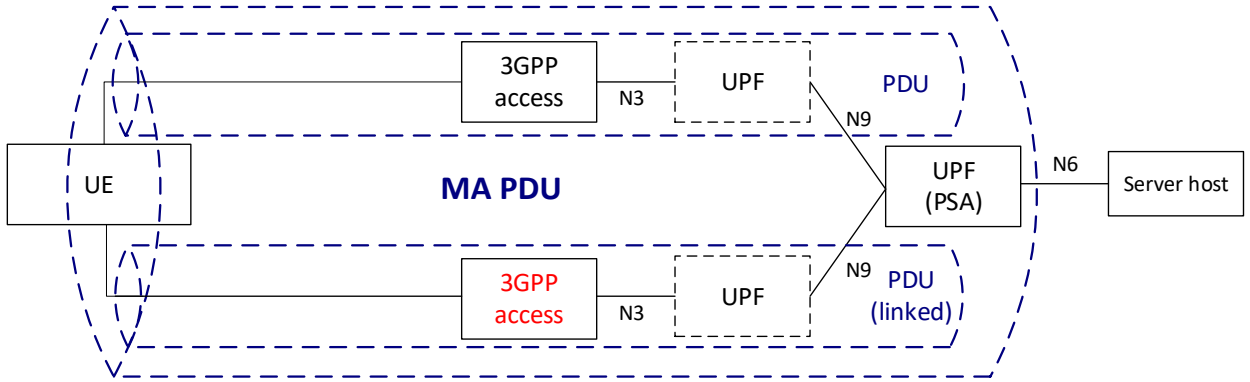

© 3GPP 2019

Motivation: example use cases

Single PLMN

Terrestrial + Satellite access

- NTN used to extend TN capacity/Throughput, or vice versa
- Can be temporary dual RAT coverage (e.g., UEs in a train/cruise-ship/plane, at a stopover)

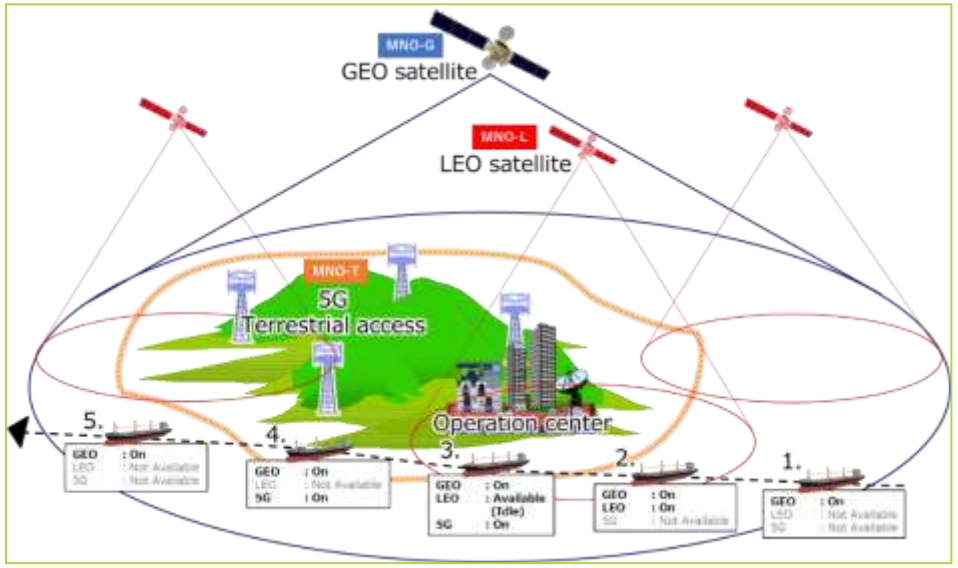

Other examples: NR + LTE (e.g., if/where Multi Radio Dual Connectivity (option 4) is not available)

Dual PLMN or PLMN + SNPN

Local dual-NW connectivity, e.g., in a stadium

- Using local SNPN/PLMN2 RAT for extra PLMN1 capacity, or vice versa. Can be temporary / on-demand
- Other similar scenarios: campus, enterprise, factory…

Other examples: Terrestrial + Satellite 3GPP access, or dual SAT access (E.g., partnership by PLMN1 with SAT MNO, or b/w 2 SAT MNO)

© 3GPP 2019

Motivation: SA1 FS_DualSteer work

- SID: SP-220445
- TR: 22.841
- Completion in April ’23: 75%
- Target completion: June ’23
- Requirements:
  - Functional only
- System Impacts:
  - UE, CN

Scope:

- Support of enhanced mechanisms for steering, splitting and switching of user data, pertaining to a UE data session, across two 3GPP networks
- One single PLMN subscription
- Single PLMN, dual PLMN or PLMN + NPN (two networks can be managed by the same or different operators)
- Two 3GPP networks may use same or different RATs, i.e. NR + NR or NR + E-UTRA, (NR can be terrestrial NR or satellite NR).

© 3GPP 2019

Main objectives

- Study how an MA PDU Session can support two 3GPP access paths in the same or in different 3GPP networks
  - In case of single 3GPP network, the network is a PLMN; In case of different 3GPP networks (which may be managed by the same or by different MNOs), one network is a PLMN and the another one is PLMN or a SNPN.
  - The UE registers to one or multiple networks by using the same 3GPP credentials for all networks (i.e., single PLMN subscription)
  - The two 3GPP access paths may use the same or different RATs (e.g., Terrestrial NR plus Non-Terrestrial NR, NR plus E-UTRA, etc.)
- More in detail, the following aspects are to be explored:
  - Selection of second PLMN or SNPN in case of different 3GPP networks
  - Registration and session management
  - Mobility between single 3GPP and dual 3GPP access as well as between dual 3GPP accesses
  - Traffic routing towards PSA UPF
  - Extensions of policies, steering functionalities and steering modes

© 3GPP 2019

Thank you!

© 3GPP 2019