Study on UE Aggregation for Industry with Multi-connectivity - UPDATED

2021-11-8

Copyright © 2021 vivo Communication Technology Co. Ltd. All rights reserved.

UE Aggregation for Industry with Multi-connectivity

RAN status

- The majority in RAN WG that support this study prefer to have RAN based solutions
  - **RAN WG has discussed the SID on UE aggregation for NR**
  - **RAN WG has discussed two alternatives for RAN based solutions**
  - **RAN WG has identified both alternatives have potential CN impact, e.g. CN needs to know the aggregation**

UE Aggregation for Industry with Multi-connectivity

Updated SID objectives

- **SA2 aspects**
  - (WT#1) Support of management and authorization for UE aggregation.
  - (WT#2) Support of policy enforcement for binding multiple UEs, e.g., load balance, standby, etc.;
  - (WT#3) When redundancy for an application session is supported with two UE(s), support of status report for fast switching to UE backup when connection with a UE fails;
- **Coordination aspects**
  - Coordination with RAN WGs for assisting RAN solutions

UE Aggregation for Industry with Multi-connectivity

Updated Timeline

Timeline of the study

- Expect to start with other Rel-18 studies
  - **2.5 TUs for study phase, 1 TUs for WI**
- Send to SA plenary for information in **SA#96 June 2022**
- Send to SA for approval in **SA#97 Sept. 2022**

UE Aggregation for Industry with Multi-connectivity

Updated Work Tasks

Work Task	TUs (study)	TUs (normative)
Support of management and authorization for UE aggregation. (WT#1)	1	0.5
(WT#2) Support of policy enforcement for binding multiple UEs, e.g., load balance, standby, etc. (WT#2)	1	0.25
When redundancy for an application session is supported with two UE(s), support of status report for fast switching to UE backup when connection with a UE fails (WT#3)	0.5	0.25

THANK YOU.
谢谢。

Copyright © 2021 vivo Communication Technology Co. Ltd. All rights reserved.

UE Aggregation for Industry with Multi-connectivity

Assistance for RAN based solutions

- **Characteristics of the study**
  - In RAN aspect, one UE has **3GPP defined aggregation layer**, the other UEs integrate with the UE (independent RX/TX sets), or connect to the UE via non-3GPP direct link (e.g., WIFI, Bluetooth, wireline)
  - All UEs camp on same RAN node (but do not define interaction between UEs)
- **Benefit**
  - Minimal packet retransmission via another connection when one connection fails
- **Objectives**
  - How to provision group information and policy for UE aggregation to RAN, e.g., load balance, standby, etc.
  - How to handle RAN report of connection failure for fast switch

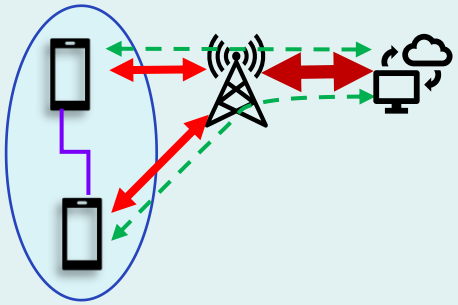
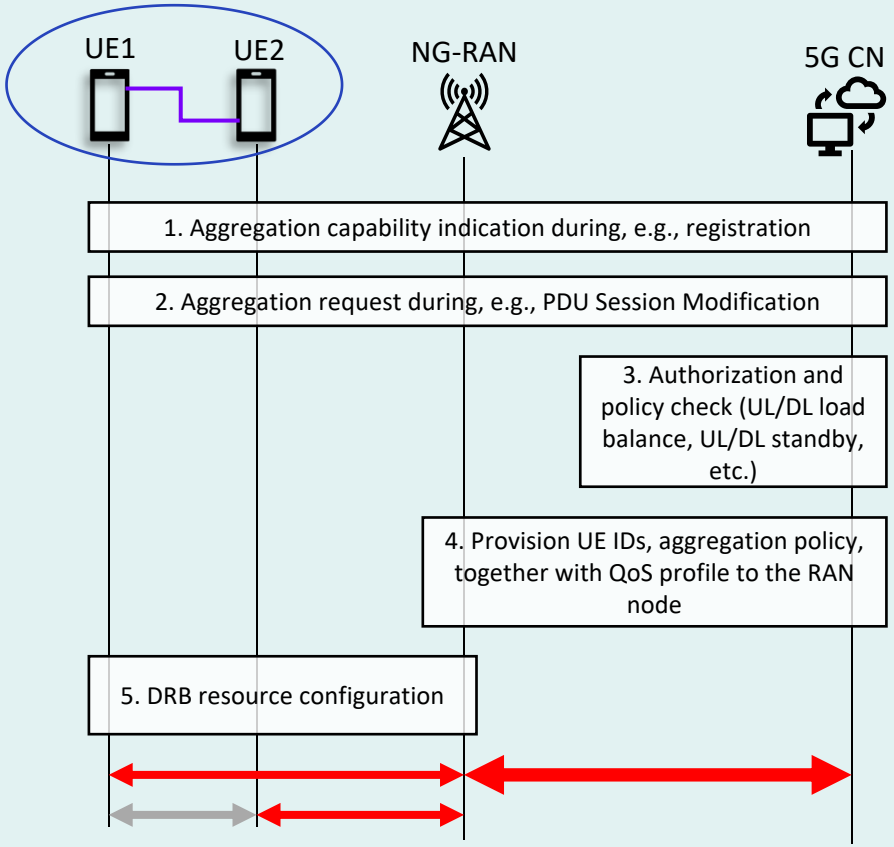
High level concept of RAN based UE aggregation for an QoS Flow