S2-2104124

Rel18 Study item proposal
5G Timing Resiliency and TSC enhancements for IP and ETH applications

May 2021

Nokia, Nokia Shanghai Bell

 © 2021 Nokia Nokia Confidential

Roadmap for TSC enhancements for IP and ETH applications

5G standards Rel-15

Release 16:
Integration with IEEE TSN and gPtP Time Sync

Release 17:
Enablers for generic TSC, Time Sync for any application

Release 18:
Resilient timing and TSC enh for IP, ETH deterministic applications

Rel-16 Vertical_LAN

- Integration with IEEE TSN Centralized configuration model.
- Ability to support gPtP Time synchronization, distribution of external clock via 5GS. Best master clock is configured.
- Traffic assistance information for deterministic traffic from IEEE TSN networks.

Rel-17 IIoT

- Enablers to support Time Sensitive communication for any deterministic application.
- Ability to support AF activated time sync, PtP, uplink and UE-UE time sync, BMCA.
- Deterministic application requested QoS parameters, TSC assistance.

Rel-18 Proposal

- 5G Timing Resilient System – 5G becomes resilient to loss of GNSS with terrestrial alternative.
- Generic TSC enh for 5GS, integration with IEEE TSN Distributed config model, DETNET
- Reliability enhancements for 5GS
- Optimized UPF selection for TSC

© 2021 Nokia
Nokia Confidential

Motivation for 5G Timing Resiliency System (TRS)

5G Release-18 TRS objectives

5G wide area networks will serve critical infrastructure services in public and private domains

5G resilient to loss of GNSS 1

5G wide area networks offer attractive wireless and indoor-capable time synchronization service

5G backup for GNSS timing 2

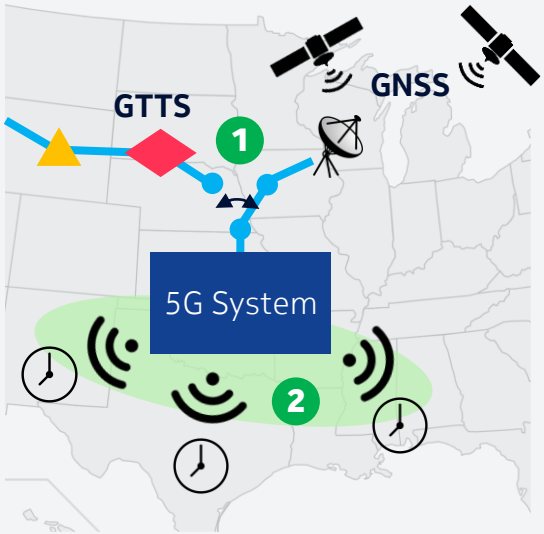

© 2021 Nokia
Nokia Confidential

Stake-holders for 5G Timing Resiliency System

- Who benefits from resilient timing?
  - Wide area network operators with own 5G infrastructure, 5G networks rely on GNSS today (either integrated at radio sites or via PTP GM solutions distributed within the operator's transport network)
  - 5G public network customers (e.g. smart grid, financial)
  - 5G private network customers (e.g. factory use cases)
- Stakeholder ecosystem for TRS:
  - Wide area Network Operators: decide how to manage and operate timing resiliency within their network (e.g., 5G network integration with other independent timing services)
  - Timing services (direct stakeholder): 5G can be used to extend timing services like what is provided by NPL to end-users where a direct fiber connection is not viable
  - Vendors (Indirect stakeholder): Ensure requirements and specifications within 3GPP are aligned with product roadmap or product interests

© 2021 Nokia
Nokia Confidential

Rel-18 SA1 Study item - 5G Timing Resiliency System

Service requirements

General:

- The 5G system shall be able to receive accurate timing signals from one or more independent timing source(s), which can offer a timing alternative to GNSS, e.g. TBS/MBS [7] [8]], Sync over Fiber [7].
- The 5G system shall be able to maintain accurate time synchronization as appropriate for the supported applications in the event of degradation or loss of GNSS timing signals.

Service Exposure

- The 5G system shall support a mechanism for a 3rd party application to request resilient timing with specific KPIs (e.g., accuracy, interval, coverage area).

Holdover

- The 5G system shall support a holdover capability (maintaining UTC required accuracy) of up to 24h.

Monitoring and Reporting

- The 5G system shall monitor for timing source failure.
- The 5G system shall be able to detect when reference timing signals (e.g., from GNSS or other timing source) are no longer viable for network time synchronization.
- The 5G system shall support a mechanism to determine the time uncertainty of the 5G time synchronization.
- The 5G system shall be able to indicate to devices (e.g., UEs, applications) that they need to use an alternate time source (e.g., to 5G system internal holdover capability, atomic clock, Sync over Fiber, TBS, GNSS), taking into account the holdover capability of the devices.
- The 5G system shall be able to detect when a timing source fails or is restored for network time synchronization.
- The 5G system shall support mechanisms to monitor different time sources and adopt the most appropriate.
- The 5G system shall support a mechanism to report timing resiliency information (e.g., divergence from UTC, time uncertainty) to 3rd party applications.

© 2021 Nokia
Nokia Confidential

Example applications and mapping to 5G synchronization performance

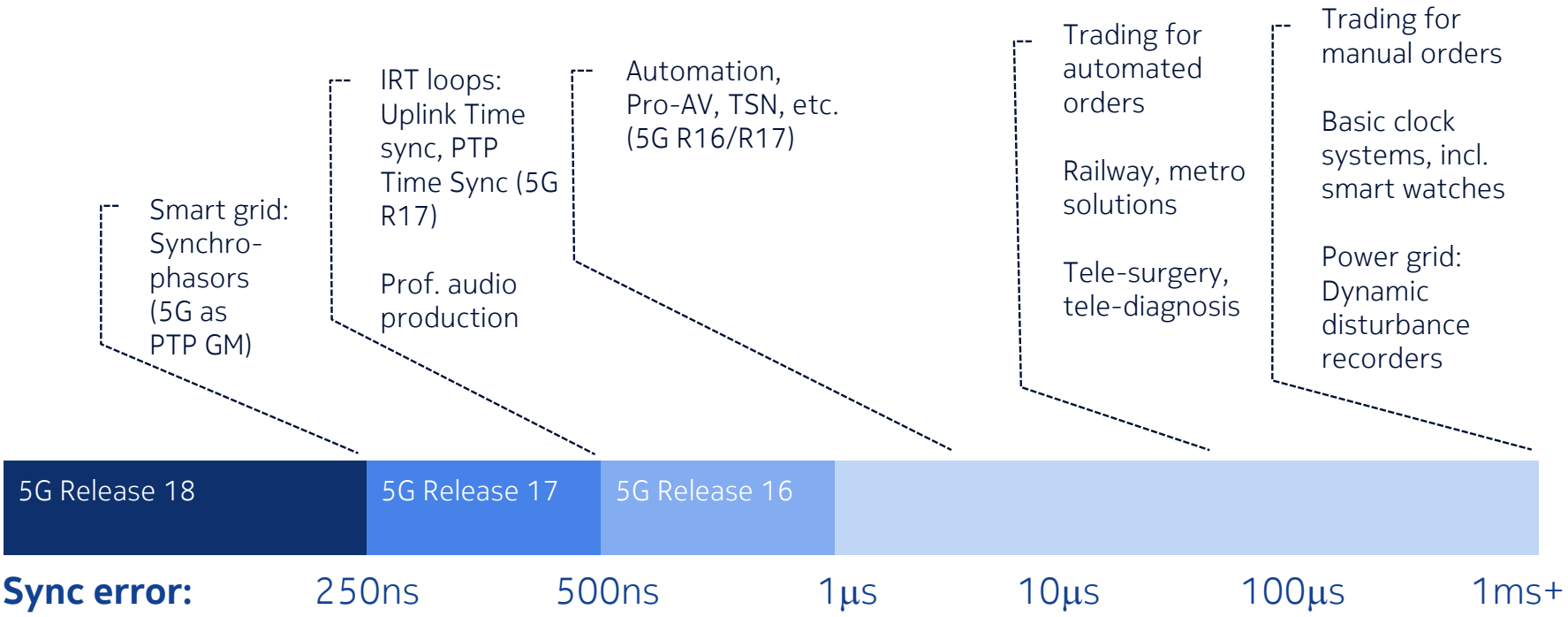

© 2021 Nokia
Public

5G providing timing resiliency wirelessly (1): Smart Grid

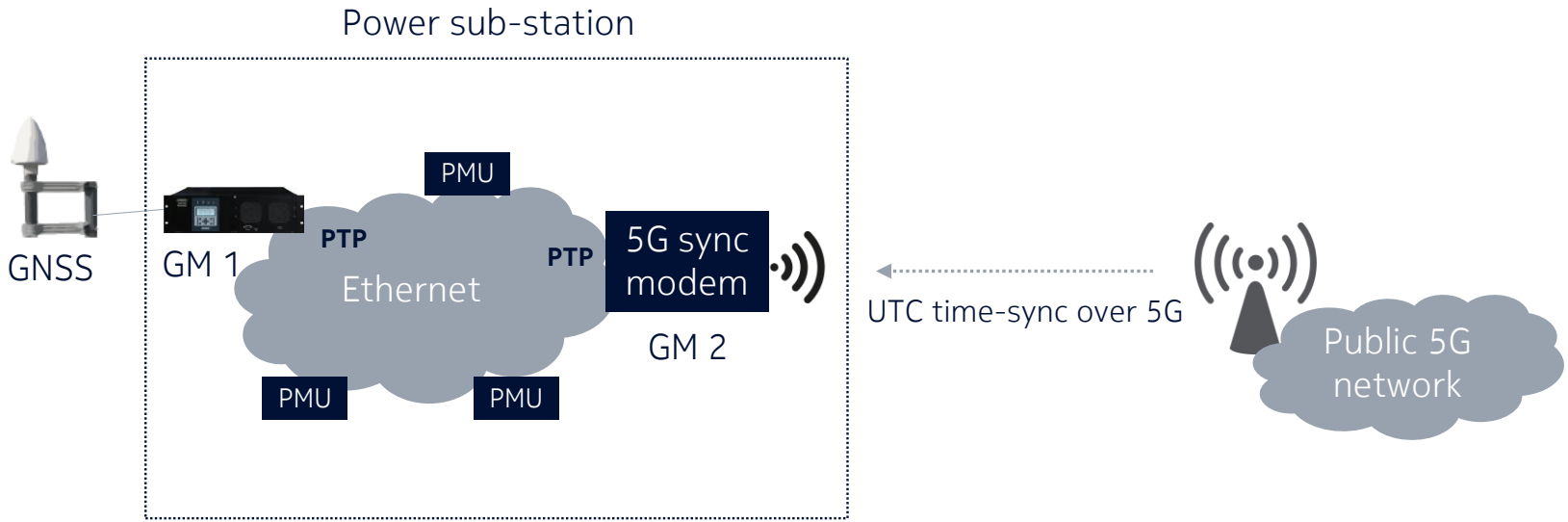

© 2021 Nokia
NOKIA Bell Labs

5G providing timing resiliency wirelessly (2): Finance

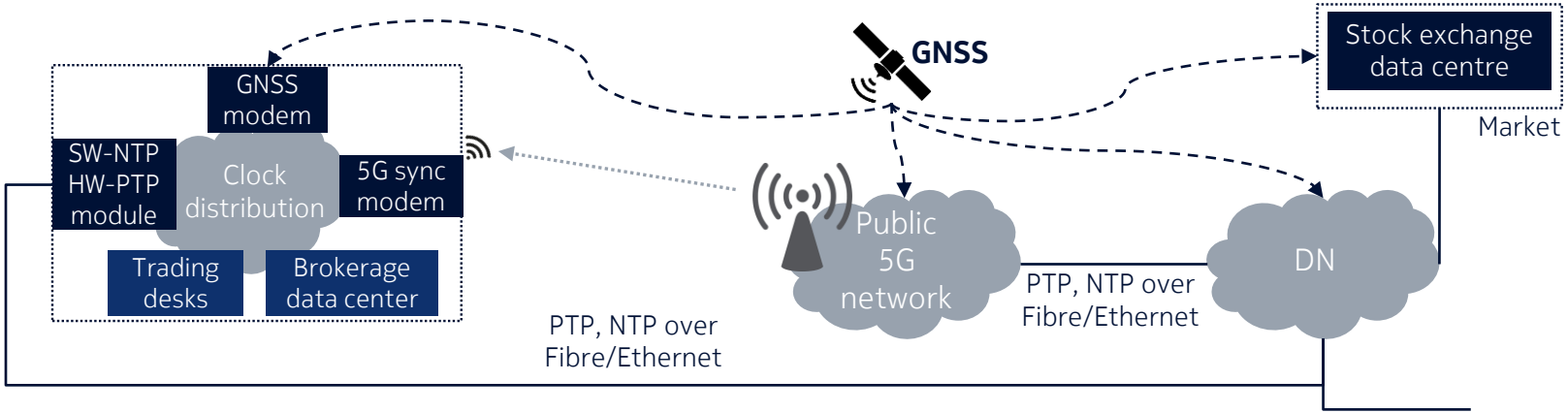

© 2021 Nokia

Generic TSC enhancements for IP and ETH applications

- Generic TSC and exposure enhancements to 5GS for IP and ETH applications
  - Optimized UPF selection to avoid circuitous path
  - Ability for AF to request a certain reliability criteria in addition to QoS
  - Dynamic Group management of industrial devices (5G-ACIA requirement) using NEF API.
- 3GPP spec impacts due to 5GS integration with IEEE TSN distributed model for ETH applications
- 3GPP spec impacts due to 5GS integration with IETF DETNET, if any, on top of generic TSC enhancements introduced for any AF and IP applications.

© 2021 Nokia
Nokia Confidential

Optimized UPF selection for highly constrained IIoT and URLLC devices

- Status quo: Current UPF selection is largely based on DNN, S-NSSAI but it is not possible to select a desired UPF based on the expected transport delay or topological distance for a UPF considering desired packet delay budget for the session.

 © 2021 Nokia Nokia Confidential

Optimized UPF selection for highly constrained IIoT and URLLC devices

- Status quo: Current UPF selection is largely based on DNN, S-NSSAI but it is not possible to select a desired UPF based on expected transport delay or topological distance for a UPF considering desired packet delay budget for the session.
- Furthermore, current UPF selection mechanism has no consideration for location of CU-UP.
- Proposal: For UE-A, B, Cs requesting URLLC Session with DNN, S-NSSAI-A, network should be able to consider the desired PDB, expected backhaul delay considering location of CU-UP in order to allocate the right UPF for each UE-A, B, C.
- Without this proposal, optimal UPF for requested PDB may not be selected, URLLC improvements over the air will be wasted if right UPF is not selected.

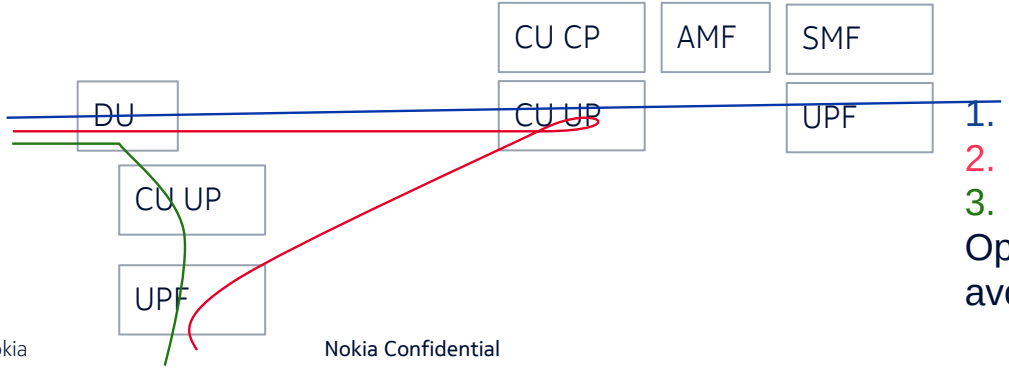

1. Standard UP flow
2. Non optimal UP flow
3. Optimal UP flow

Optimized UPF selection proposal is to avoid 1 and 2

© 2021 Nokia
Nokia Confidential

Potential spec impacts due to Optimized UPF selection

- The standardized set of NRF query attributes for UPF selection is extended to allow for new attributes such as physical / time / topological distance, etc…. with query attributes allowing “<“, “=“ or “>“. Such criteria do not currently exist in NRF queries.
- Improve NGAP (N2 SM) signalling allowing the SMF to know there are very local CU UP capabilities in order to pick a co-located UPF (Leveraging NGAP capabilities defined for WWC, also for 3GPP access/NG-RAN). The UPF could be selected based on the ULI (cell Id) so near the NG RAN DU <u>when there is a CU UP near the DU</u>.
- Frequently asked questions and answers:
  - 1. Q: How can SMF / NRF know that a NG RAN CU UP is deployed near the DU?
    - A: NG RAN informs 5GC by including this information in the NGAP signaling carrying UL NAS.
  - 2. Q: How can SMF know that there is a UPF near to the DU?
    - A: corresponding to Cell-ID.
  - 3. Q How can 5G AN understand that it should pick a very local CU UP? how can the RAN CU CP know that the SMF has picked a UPF near the DU?
    - A: using the IP address of the UPF F-TEID.

 © 2021 Nokia Nokia Confidential

Any AF to request a certain reliability criteria via NEF API

- Reliability requirements are specific to Application Flows
  - Eg: Real-time deterministic traffic for motion may have different reliability requirements than OA&M traffic from the same device.
- 5GS already has mechanisms to support high reliability
  - PDCP duplication using dual connectivity
  - Redundant PDU Sessions using dual connectivity
  - Redundant N3/N9 tunnels
  - Redundant transmission at transport layer
  - Two UEs associated with separate reliability groups
- Proposal: Expand Exposure Framework so the AF can request reliability. Allow AF to:
  - request reliability from the 5GS (directly from PCF or via NEF)
  - receive notifications when reliability requirements are not met

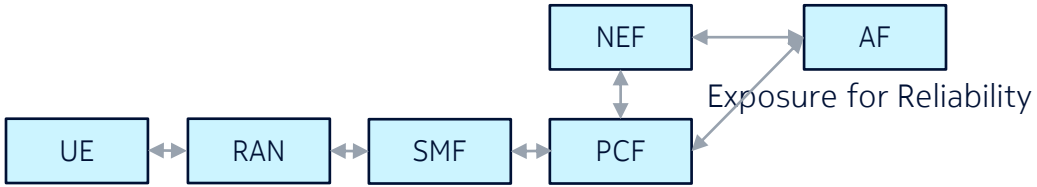

 © 2021 Nokia

NOKIA Bell Labs

NEF enhancements to support dynamic group management

- Currently NEF does not support general group management functions (add/delete/modify). This is only supported for 5G VN groups. NEF supports Group ID, and functions to address a group, but the group is managed outside NEF. This creates problem in that NEF can go out of synch when AF is monitoring a group that was altered.
- 5G-ACIA is requesting 5G system to support management of device groups (see subsequent slide).
- Proposal: Group Management has to be added to NEF functions. This is to cover dynamic group management by the AF and the AF can use it to add/remove user from group.
- Dynamic group management capabilities in the NEF can be used for Time Sync PTP groups, ensure that the UE(s) are in the same serving area for PTP instance. For instance, it is needed for the AF to limit the time synchronization sync to a single PTP instance. This way the AF can group and request time sync for a group of UE(s) (e.g. UE1/UE2/UE3) corresponding to a given PTP instance.

 © 2021 Nokia Nokia Confidential

5G-ACIA whitepaper "Exposure of 5G Capabilities for Connected Industries and Automation Applications"

https://www.5g-acia.org/fileadmin/5G-ACIA/Publikationen/Exposure/5G-ACIA_ExposureOf5GCapabilitiesForConnectedIndustriesAndAutomationApplications.pdf

Full requirement list

Requirements for 5G exposure reference points

4.1 Overview
4.2 Device management
4.2.1 Device identity management
4.2.2 Device provisioning and onboarding
4.2.3 Device connectivity management
4.2.4 Device connectivity monitoring
4.2.5 Device group management
4.2.6 Device location information
4.3 Network management
4.3.1 Network monitoring
4.3.2 Network configuration and maintenance
4.4 Security requirements

Main body

4.2.5 Device group management

[R-4.2.5-01] The 5G exposure reference point must enable creation, modification, and removal of groups of devices, including definition of group communication services and other group attributes. A unique external group identifier is allocated by the 5G NPN for each group of devices.

Note 1: An example group attribute is the service area.

[R-4.2.5-02] The 5G exposure reference point must support the addition/removal of individual devices to/from a group.

Note 2: A device can belong to multiple groups concurrently. A device may also join/leave a group in accordance with, for instance, device location.

[R-4.2.5-03] The 5G exposure reference point must allow IIoT applications to subscribe to notifications of group status events.

Annex

9.1.4 Device group management

Use case	Description	Comments
Title	Device group management	
Goal	Creation/modification of 5GLAN groups in the 5G NPN, each providing 5G LAN-type services	
Actors	Device (consumer via Ed) with an integrated 5G UE (producer via Ed) Device management server (consumer via En; IT enterprise domain) Device group management service (producer; 5G NPN)	
Pre-conditions	The 5G NPN is operational and is configured with communication services, e. g. IP communication or Ethernet-type services.	
Execution – step 1	The device management server requests the device group management service to create a 5GLAN group and set its attributes, including network name, communication type (IP or Ethernet), VLAN identifier, and default QoS parameters for device connection to the 5G LAN group. The device group management service provides the 5G LAN group data to the 5G system and replies with a unique group identifier for the 5G LAN group. The device management server requests the device group management service to modify a group identified with the external group identifier. Modifications may include changes to the group attributes or deleting the group. The device group management service provisions the modification, and replies indicating success or failure. When deleting a group, all device members of the group are first disconnected from the 5GLAN group; the device management server is notified of the device disconnection. The device management server adds or removes one or more devices (each identified with a GPSI) to/from a 5GLAN group identified with the external group identifier. The device group management service provisions the modification, and notifies the devices and the device management server that device(s) has/have been added or removed from a 5GLAN group.	External group identifier is a unique public 3GPP-specified identifier assigned to a group of devices. The individual devices are identified e. g. by the GPSI.
Post-conditions	5GLAN groups are provisioned in the 5G NPN and a device is a member of one or more 5GLAN groups.	

 © 2021 Nokia

Nokia Internal Use

Dynamic Group management for Time Sync service

- Status Quo: 5GC can force the same NW-TT for all UEs using a specific DNN/S-NSSAI.
- But if it needs to be possible to offer support of time sync service independent of DNN/S-NSSAI and it needs to be possible to support different PTP instances, then each group of DS-TTs (e.g. connected to certain NW-TT) could be treated as a separate PTP instance.
- The AF must be able to discover and manage the groups of UE IDs that are connected to the same NW-TT and may be used to create a PTP instance. The AF can then activate the time-sync service separately for each group of UEs.

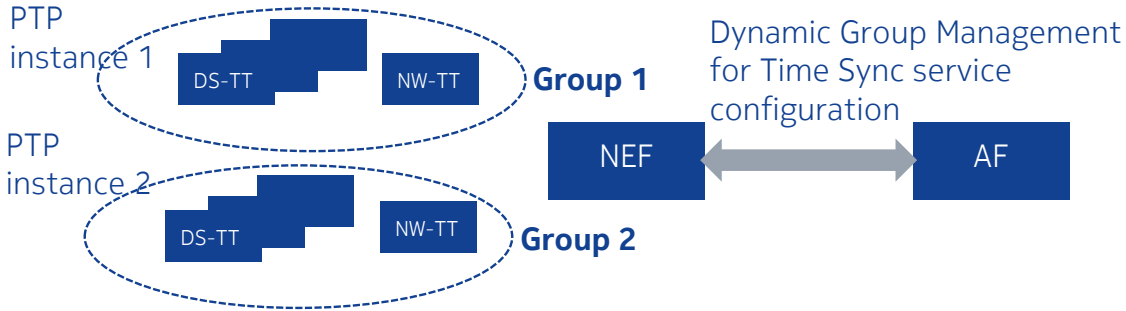

© 2021 Nokia
Nokia Confidential

Introduction to Frame Replication and Elimination for Reliability (FRER)

Example scenario with two redundant paths

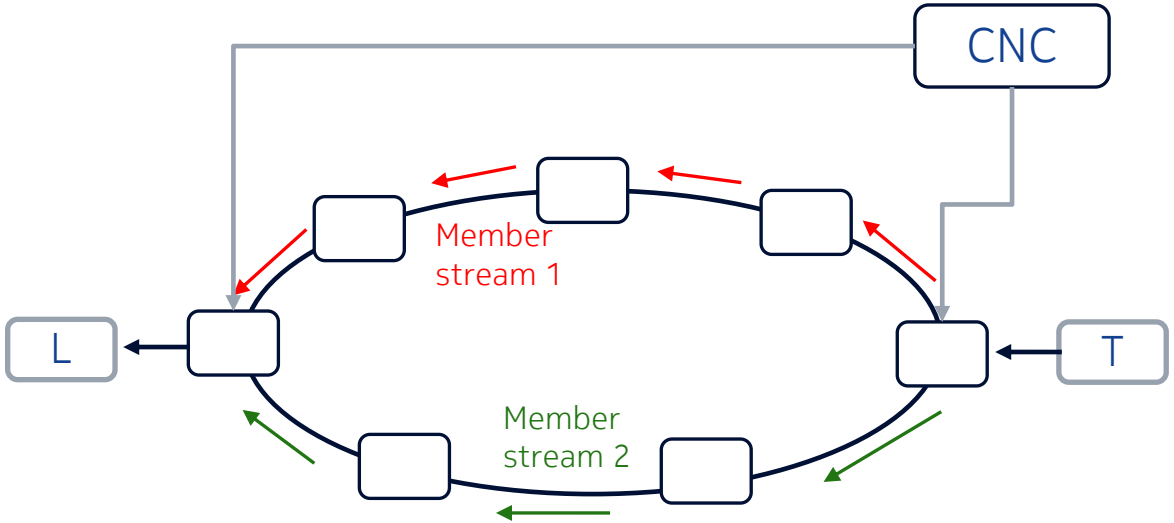

- FRER increases **E2E reliability** by replicating (and modifying) every packet of the stream
- Example: A compound stream with two component member streams
- Determination of redundant paths is not in scope of IEEE 802.1CB

 © 2021 Nokia Nokia Internal Use

FRER Roles (1/2)

5GS as FRER transparent bridge can be supported by current 3GPP specs

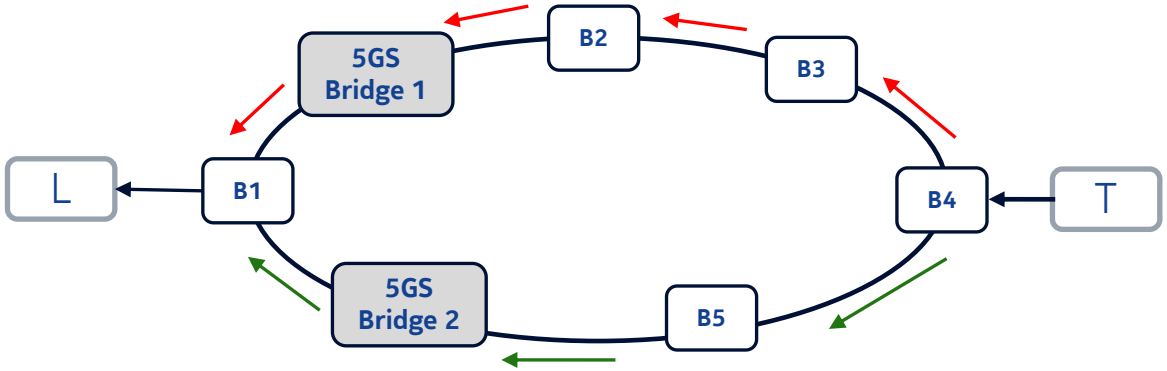

- Two 5GS bridges shall use the same physical resources
- Guarantee independent physical resources for the member streams
- Use redundancy mechanism defined in 23.501

© 2021 Nokia

<Document ID: change ID in footer or remove> <Change information classification in footer>

FRER Roles (2/2)

5GS as FRER aware bridge is not supported by 3GPP specs

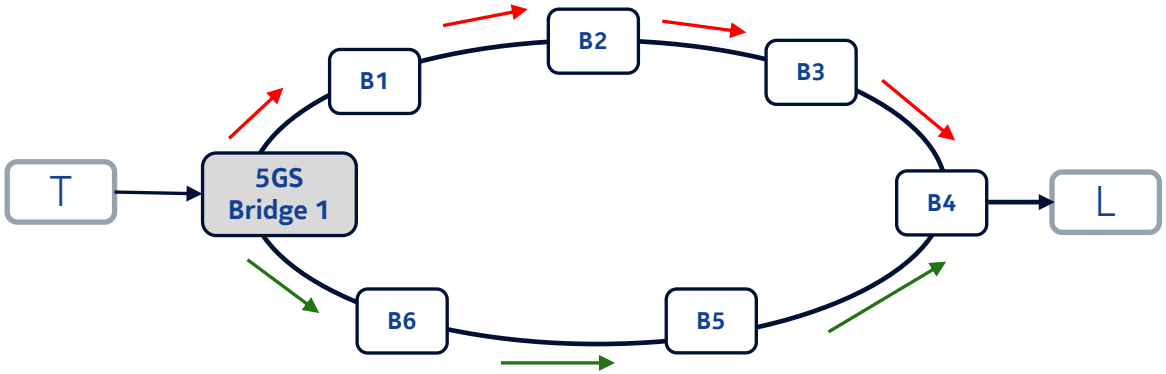

Stream splitting function:

- Detect packets based on filters
- Create duplicates
- Add R-tag
- Modify MAC address, VLAN IDs

Sequence recovery function:

- Detect packets based on filters
- Modify MAC address, VLAN Ids, PCP
- Eliminate duplicates
- Remove R-tag

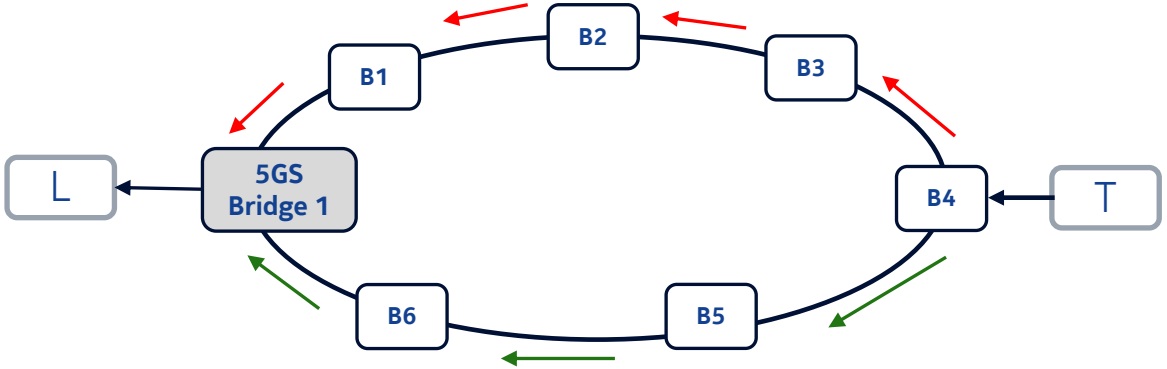

© 2021 Nokia

<Document ID: change ID in footer or remove> <Change information classification in footer>

IEEE TSN Configuration Models

Complementary capabilities and use cases

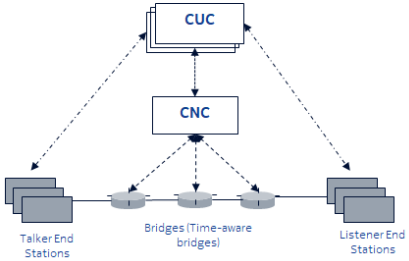

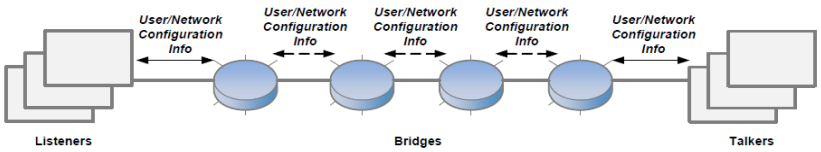

Centralized Model

- Bridges report capabilities and topology to CNC who sets up stream forwarding and schedules on bridges.
- Ideal for small-scale networks and isochronous traffic, for instance machine/field level communication.
- Less ideal for devices moving within the factory floor with dynamic traffic characteristics.
- Supported in 5GS since R16.

Distributed model

- Stream forwarding and QoS setup based on signalling protocols between talkers and listeners across bridges, each bridge operates autonomously
- Ideal for devices moving within the factory floor with more dynamic streams, for instance controller-to-controller communication and audio/video
- Initially designed for less strict real-time traffic but IEEE is defining support all traffic and QoS types
- Not yet supported in 5GS

© 2021 Nokia
Nokia Confidential

5GS Support for IEEE TSN Distributed Model
Rationale and Impacts

Use case

- Several industrial companies have indicated they want to deploy distributed model in addition to centralized model in their industrial Ethernet networks due to scaling and dynamicity benefits

Benefits for 5GS support

- Staying up-to-date with industrial Ethernet evolution with direct integration capability
- Many use cases and QoS requirements fit well with wireless deployment and 5G radio capabilities
- Dynamic stream addition/removal allows also dynamic resource management in RAN, resource (capacity, latency) that needs to be reserved is explicitly requested.

5GS Impacts and Considerations

- 5GS (Bridge) would have to support the specific IEEE signaling and control protocols (receive, process, send messages as a bridge), and map them into 5GS QoS and forwarding procedures
- IEEE protocol work is still partially work in progress for the advanced capabilities

 © 2021 Nokia Nokia Confidential

Protocols Related to TSN Distributed Configuration Model

IEEE Signalling/Control Protocols used between Bridges and Endpoints

Protocol function	Requirement for a Bridge	Current IEEE Protocol Suite (MRP based)	Upcoming* IEEE Protocol Suite (LRP based)
Stream registration (QoS reservation)	Mandatory	MSRP (complete from IEEE perspective)	RAP/LRP (LRP complete, *RAP standardization finalization in 2022!)
VLAN membership management	Mandatory	MVRP (complete from IEEE perspective)	
Group membership management	Optional	MMRP (complete from IEEE perspective)	
Topology and forwarding management	Mandatory (de facto)	Spanning Tree Protocols (STP, RSTP, MSTP) in wide use. Shortest Path Bridging (IETF IS-IS routing protocol with IEEE extensions) more optimal for large networks.	

LRP improvements

- Higher efficiency
- Application neutral transport protocol

RAP feature extensions

- Support of all 802.1 queuing/transmission schemes
- Transmission over redundant paths (FRER)
- Improved bandwidth utilization (μStream aggregation)
- Proxying capabilities for support of CNC

The main question from market requirements perspective is whether 5GS Bridge should support both MSRP (first) and RAP/LRP (once stable) or just leapfrog over MSRP to RAP/LRP.

 © 2021 Nokia Nokia Confidential

Impact to 5GS due to integration with IETF DETNET

- IETF standard for DETNET: RFC 8557 (DetNet Problem Statement), RFC 8578 (DetNet Use Cases), RFC 8655 (DetNet Architecture).
- 3GPP spec impacts due to 5GS integration with IETF DETNET, if any, on top of generic TSC enhancements introduced for any AF and IP applications.
- In order to support integration between IETF DETNET, the AF can provide the necessary QoS parameters and application traffic characteristics via the NEF API which can eventually be converted to appropriate 5GS QoS parameters and TSCAI as per Rel-17 specification.
- Most efficient way to support integration with DETNET is to enhance the generic exposure framework defined in Rel-17 as part of IIoT work, enable negotiation of specific parameters between 5GS and deterministic application.

Extend 5GS Exposure framework to support integration with DETNET application as for any AF

 © 2021 Nokia Nokia Confidential

Summary and Way forward proposal

Rel-18 study item proposed for the following:

- Support for 5G Timing Resiliency System for IP and ETH applications.
- Generic TSC and exposure enhancements to 5GS for support of optimized UPF selection, reliability and dynamic group management APIs.
- Essential spec impacts due to 5GS integration with IEEE TSN distributed model for ETH applications.
- Minimal enhancements to support FRER aware 5GS Bridge.
- Minimal spec impacts due to 5GS integration with IETF DETNET, if any, on top of generic TSC enhancements introduced for any AF and IP applications.

 © 2021 Nokia Nokia Confidential

NOKIA