3GPP SA WG1 Meeting #98e
Electronic Meeting, 9 - 19 May 2022

S1-221018
(revision of S1-220112)

Qualcomm

Upper Layer TRaffic Aggregation and Steering, over dual 3GPP access (ULTRAS)

SA1 Rel-19 Study proposal - Overview

Motivations and Target scenarios

Main goals & benefits

- Enable additional 5GS tools, under MNO control/policy, to **improve access/NW resources utilization, capacity, coverage, reliability and QoE,** using dual 3GPP access
- Provide flexible user plane traffic **aggregation, steering & switching at higher layers**.
  - Complement other solutions, e.g. RAN-based (where not available or suitable).
  - Extend existing mechanisms, e.g. ATSSS (3GPP and non-3GPP access)

Target scenarios / options

- Single PLMN
- $PLMN_1$ + $PLMN_2$
  - (Single subscription)
- PLMN + SNPN
  - (Single subscription)
- Same or different 3GPP access/RAT
  - E.g. NR&NR, NR&LTE, NR&NTN, NTN&NTN

Use cases

Few examples

Single PLMN

Terrestrial + Satellite access

- NTN can be used to extend TN capacity/Tput, or vice versa
- Can be temporary dual RAT coverage
  - e.g. UEs in a train / cruise-ship / plane, at a stopover

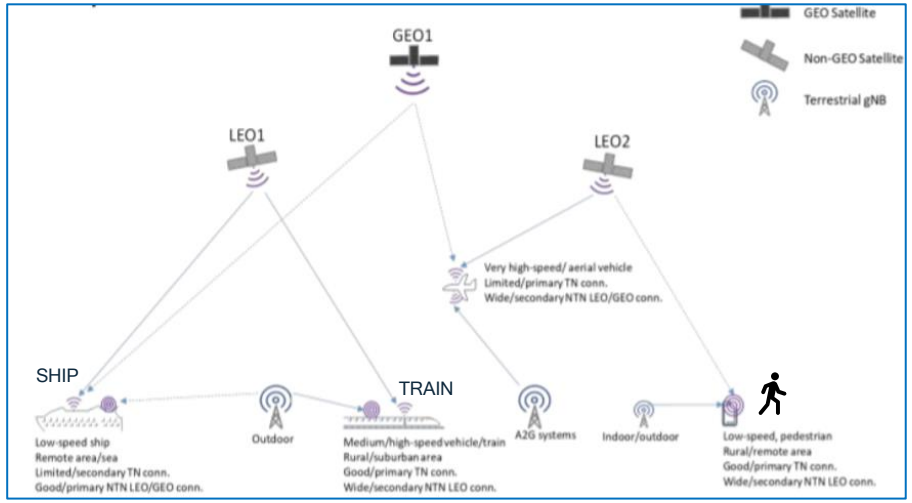

[Fig. from 38.821]

Other examples/options:

- NR + LTE
  - E.g. if/where MR-DC (option 4) is not available

PLMN1 + PLMN2/SNPN

Local dual-NW connectivity, e.g. in a stadium

- Using local SNPN/PLMN2 RAT for extra PLMN1 capacity, or vice versa
  - Can be temporary / on-demand

(May apply to other local scenarios, e.g. campus, enterprise, factory, home)

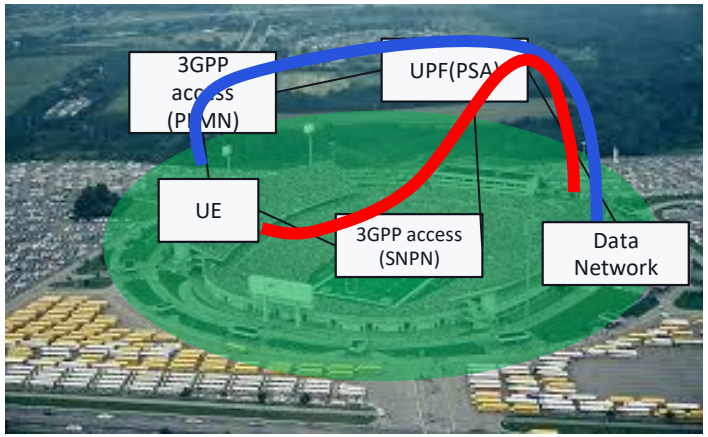

Other examples:

- Terrestrial + Satellite 3GPP access, or dual SAT access
  - E.g. partnership by PLMN1 with SAT MNO, or bw 2 SAT MNOs

(similar to the single-PLMN scenarios, assuming 2 separate MNOs)

Gaps and Proposal

Existing reqs & functionalities

SA1 requirements (22.261)

- *Sec. 6.3: Multiple access technologies*
  - Covers support of simultaneous data transmission via different access technologies (e.g. NR, E-UTRA, non-3GPP)
- *Sec. 6.18: Multi-network connectivity and service across operators*
  - Covers simultaneous connectivity to multiple serving networks operated by different operators
- Others
  - sec 6.1 (Network slicing); 6.41 (PALS),
  - Simultaneous access to PLMN and SNPN

Stage-2/3

- ATSSS (R16+)
  - Supports 3GPP and non-3GPP access

Gaps

Do not cover specific upper-layers functionalities (e.g. ATSSS like)

Focus on different services over different NWs, don't cover same data session over multi-access connectivity

Does not cover dual 3GPP access

Proposal for SA1 Rel-19: study use cases and potential requirements to enhance 5GS support of traffic steering, split and switch over dual 3GPP access

=> See SID proposal for detailed objectives

Qualcomm

Thank you

Follow us on:

For more information, visit us at:

www.qualcomm.com & www.qualcomm.com/blog

Nothing in these materials is an offer to sell any of the components or devices referenced herein.

©2018-2020 Qualcomm Technologies, Inc. and/or its affiliated companies. All Rights Reserved.

Qualcomm is a trademark of Qualcomm Incorporated, registered in the United States and other countries. Other products and brand names may be trademarks or registered trademarks of their respective owners.

References in this presentation to “Qualcomm” may mean Qualcomm Incorporated, Qualcomm Technologies, Inc., and/or other subsidiaries or business units within the Qualcomm corporate structure, as applicable. Qualcomm Incorporated includes Qualcomm’s licensing business, QTL, and the vast majority of its patent portfolio. Qualcomm Technologies, Inc., a wholly-owned subsidiary of Qualcomm Incorporated, operates, along with its subsidiaries, substantially all of Qualcomm’s engineering, research and development functions, and substantially all of its product and services businesses, including its semiconductor business, QCT.

Source sample text

Annex A

ULTRAS scenarios – Informative slides

Scenarios: Single PLMN

Example of scenarios and connectivity diagrams

- UE in coverage of dual 3GPP access, managed by a single PLMN/MNO
  - Dual 3GPP access coverage can be permanent or temporary

- Dual 3GPP access can be
  - different 3GPP RATs
    - e.g. NR&NTN, NR&LTE
  - same RAT
    - e.g. NTN LEO and MEO

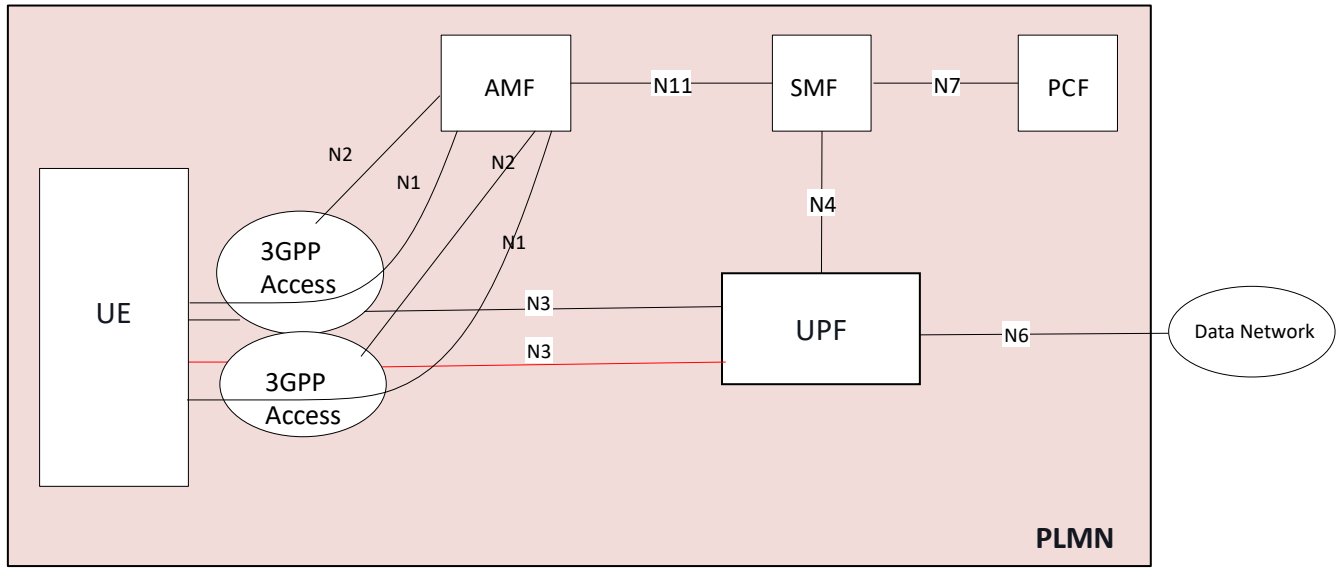

Scenarios: PLMN + PLMN

Example of scenarios and connectivity diagrams

- Area covered by both PLMNs' 3GPP RATs
  - Permanently or temporarily
- The two PLMNs can be managed by the same MNO or by two partner operators
  - No RAN sharing between PLMNs
- Single subscription
  - HPLMN+VPLMN
- Dual subscription
  - HPLMN1 + HPLMN2
- 3GPP access can be same/diff. RAT, e.g.
  - NR&NR, NTN&NTN
  - NR&LTE, NR&NTN

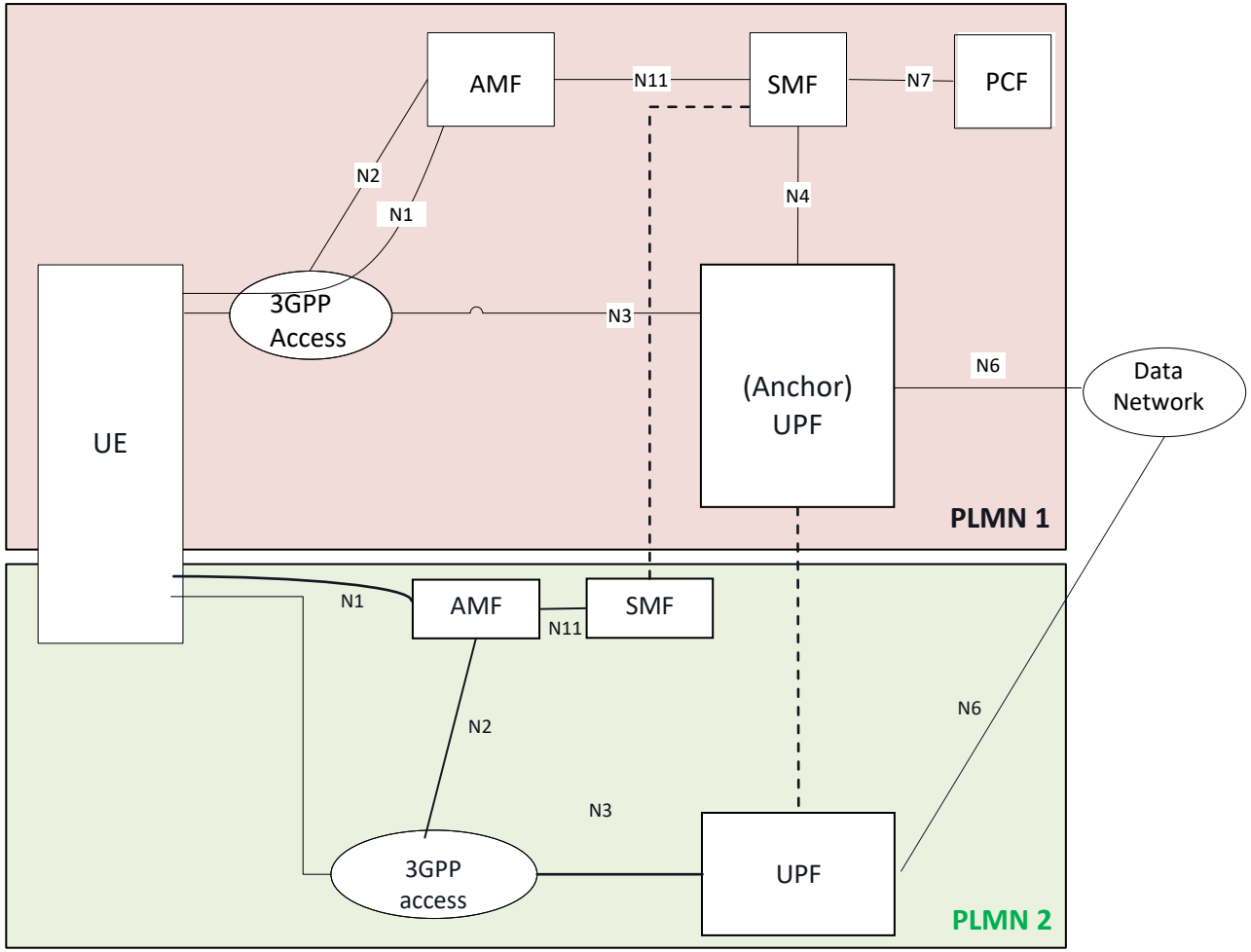

Fig shows only an example diagram - some of the interfaces may vary, e.g. based on the deployment & subscription scenario

Scenarios: PLMN + SNPN

Example of scenarios and connectivity diagrams

- Location covered by PLMN and local SNPN
  - permanent or temporary dual coverage
- PLMN and SNPN can be managed by the same operator or by two partner operators
  - No RAN sharing
- Single subscription, or Dual subscription
  - Dual subscription can be single-SIM (e.g. non-USIM credential for SNPN)
- 3GPP access can be same/diff. RAT, e.g.
  - NR&NR, NTN&NTN
  - NR&LTE, NR&NTN

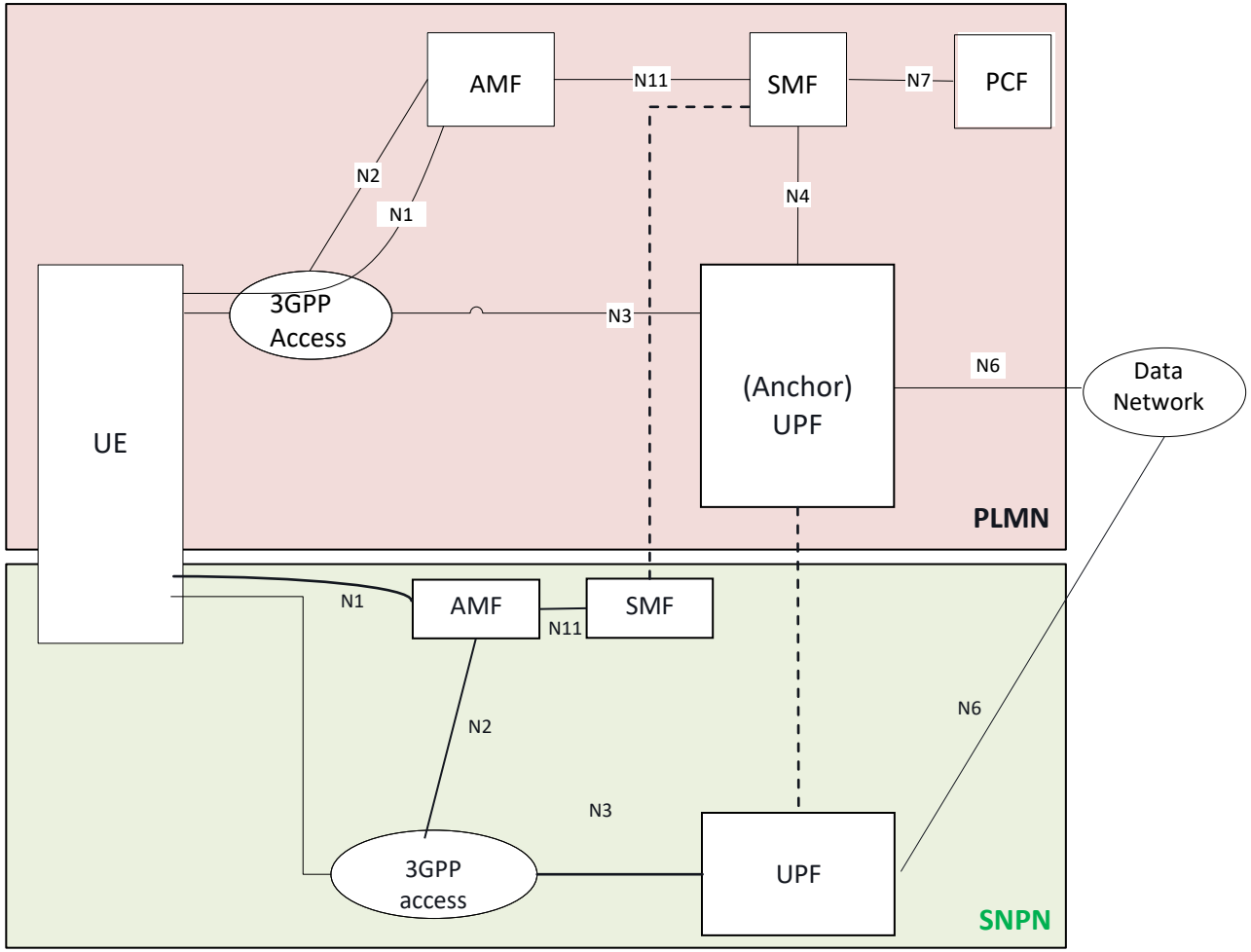

Fig shows only an example diagram - some of the interfaces may vary, e.g. based on the deployment & subscription scenario