3GPP SA WG1 Meeting #97e
Electronic Meeting, 14 - 24 Feb 2022

S1-220112
(revision of S1-yyxxxx)

Qualcomm

Upper Layer TRaffic Aggregation and Steering, over dual 3GPP access (ULTRAS)

SA1 Rel-19 Study proposal - Overview

High-level Proposal - Summary

In a nutshell: *ATSSS* + ***dual 3GPP access***

- Current ATSSS (Rel-16 onward):
  - Optional feature/support in the UE and 5GC
  - 3GPP access + **non-3GPP access**
  - Intra and inter-PLMN

ATSSS: Access Traffic Steering, Switch and Splitting, see TS 23.501

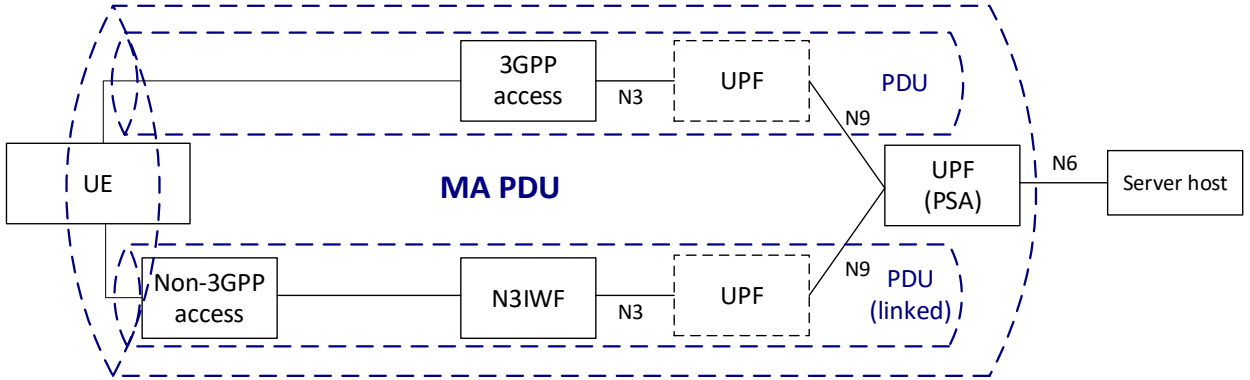

- **Our Proposal**: add support of
  - 3GPP access + **3GPP access**
  - Intra and Inter-PLMN (PLMN + PLMN/SNPN)

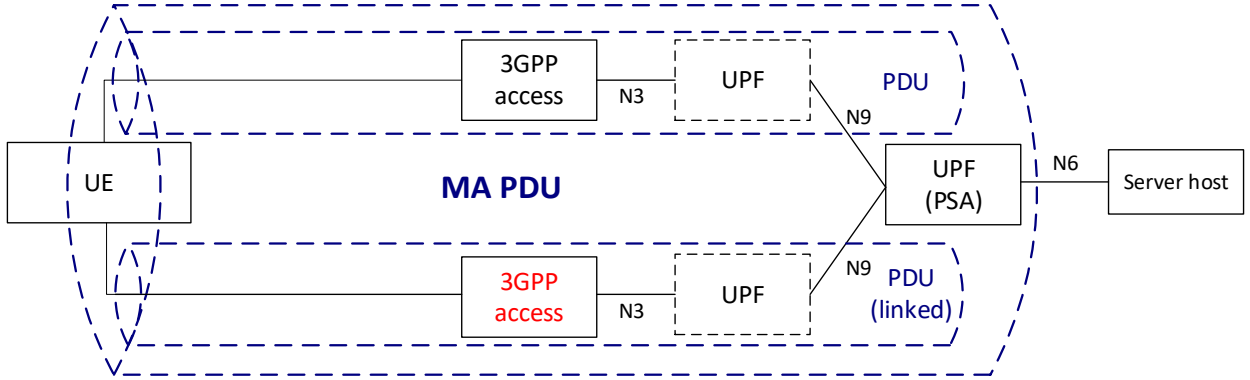

Assumption: UE supports dual (3GPP) radio

Motivations and Target scenarios

Main goals & benefits

- Enable additional 5GS tools, under MNO control/policy, to **improve access/NW resources utilization, capacity, coverage, reliability and QoE,** using dual 3GPP access
- Provide flexible user plane traffic **aggregation, steering & switching at higher layers**.
  - Complement other solutions, e.g. RAN-based (where not available or suitable).

Target scenarios / options

- Single PLMN
- $PLMN_1$ + $PLMN_2$
  - Single or dual subscription
- PLMN + SNPN
  - Single or dual subscription
- Same or different 3GPP access/RAT
  - E.g. NR&NR, NR&LTE, NR&NTN, 2xNTN

Use cases

Few examples

Single PLMN

Terrestrial + Satellite access

- NTN can be used to extend TN capacity/Tput, or vice versa
- Can be temporary dual RAT coverage
  - e.g. UEs in a train / cruise-ship / plane, at a stopover

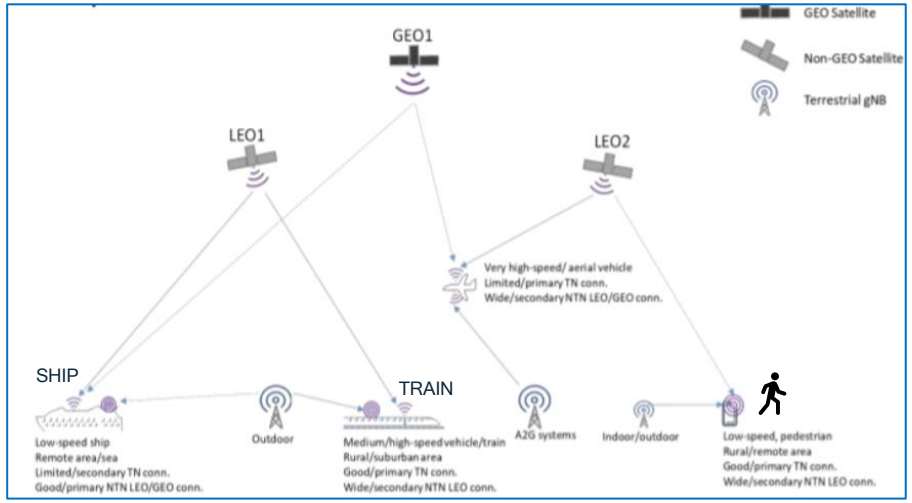

[Fig. from 38.821]

Other examples/options:

- NR + LTE
  - E.g. if/where MR-DC (option 4) is not available

PLMN1 + PLMN2/SNPN

Local dual-NW connectivity, e.g. in a stadium

- Using local SNPN/PLMN2 RAT for extra PLMN1 capacity, or vice versa
  - Can be temporary / on-demand

(May apply to other local scenarios, e.g. campus, enterprise, factory, home)

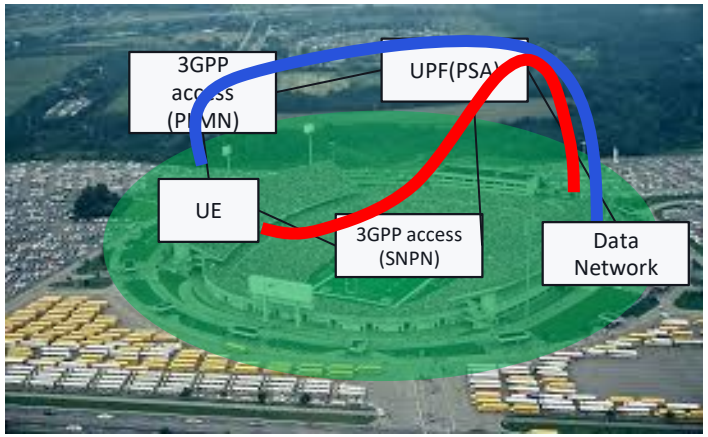

Other examples:

- Terrestrial + Satellite 3GPP access, or dual SAT access
  - E.g. partnership by PLMN1 with SAT MNO, or bw 2 SAT MNOs

(similar to the single-PLMN scenarios, assuming 2 separate MNOs)

SA1 gaps, and Study Proposal

Existing reqs & functionalities

SA1 requirements (22.261)

- *(R15+) Sec. 6.3: Multiple access technologies*
  - Covers support of simultaneous data transmission via different access technologies (e.g. NR, E-UTRA, non-3GPP)
- *(R15+) Sec. 6.18: Multi-network connectivity and service across operators*
  - Covers simultaneous connectivity to multiple serving networks operated by different operators
  - Other multi-NW connection reqs were added in R17/18: sec 6.1 (Network slicing); 6.41 (PALS)
- *Others*
  - MUSIM (dual USIM and simultaneous multi-NW access)
  - Simultaneous access to PLMN and SNPN

Stage-2/3

- ATSSS (R16+)
  - Supports 3GPP and non-3GPP access

Gaps

Do not cover specific (ATSSS-like) upper-layers functionalities

Focus on different services over different NWs, don't cover same data session over multi-access connectivity and ATSSS-like functionalities

Does not cover dual 3GPP access

Proposal for SA1 Rel-19: study use cases and potential requirements to extend ATSSS support to dual 3GPP access => See SID proposal for detailed objectives

Qualcomm

Thank you

Follow us on:

For more information, visit us at:

www.qualcomm.com & www.qualcomm.com/blog

Nothing in these materials is an offer to sell any of the components or devices referenced herein.

©2018-2020 Qualcomm Technologies, Inc. and/or its affiliated companies. All Rights Reserved.

Qualcomm is a trademark of Qualcomm Incorporated, registered in the United States and other countries. Other products and brand names may be trademarks or registered trademarks of their respective owners.

References in this presentation to “Qualcomm” may mean Qualcomm Incorporated, Qualcomm Technologies, Inc., and/or other subsidiaries or business units within the Qualcomm corporate structure, as applicable. Qualcomm Incorporated includes Qualcomm’s licensing business, QTL, and the vast majority of its patent portfolio. Qualcomm Technologies, Inc., a wholly-owned subsidiary of Qualcomm Incorporated, operates, along with its subsidiaries, substantially all of Qualcomm’s engineering, research and development functions, and substantially all of its product and services businesses, including its semiconductor business, QCT.

Source sample text

Annex A

ULTRAS scenarios – extra slides

Qualcomm

Scenarios: Single PLMN

Example of scenarios and connectivity diagrams

- UE in coverage of dual 3GPP access, managed by a single PLMN/MNO
  - Dual 3GPP access coverage can be permanent or temporary

- Dual 3GPP access can be
  - different 3GPP RATs
    - e.g. NR&NTN, NR&LTE
  - same RAT
    - e.g. NTN LEO and MEO

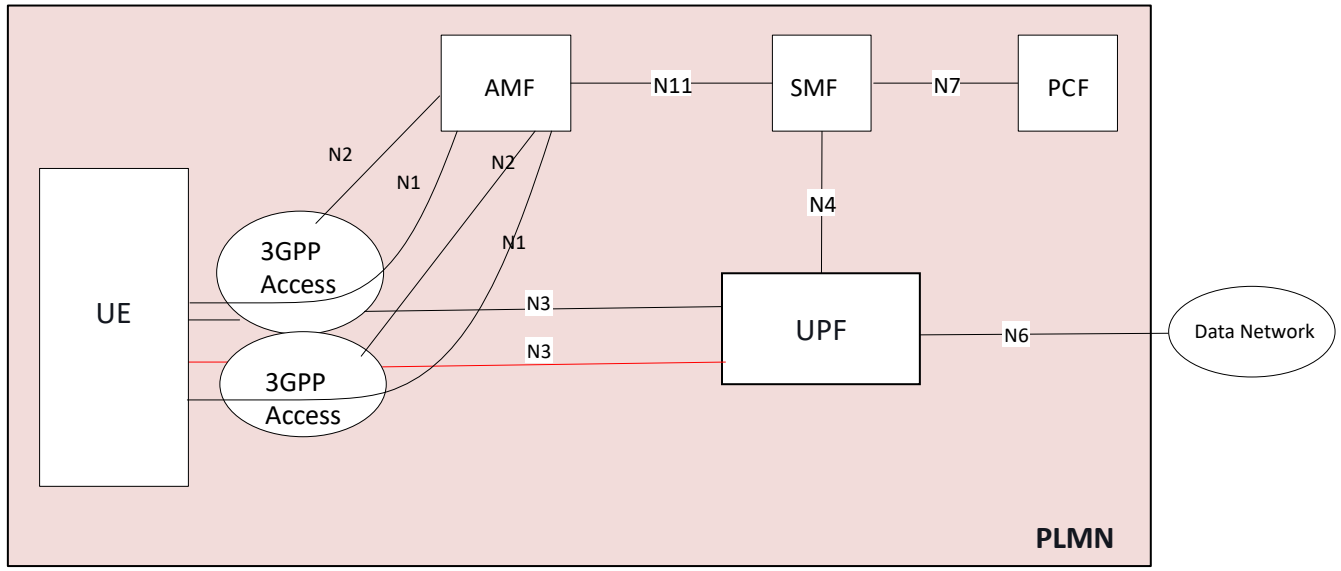

Scenarios: PLMN + PLMN

Example of scenarios and connectivity diagrams

- Area covered by both PLMNs' 3GPP RATs
  - Permanently or temporarily
- The two PLMNs can be managed by the same MNO or by two partner operators
  - No RAN sharing between PLMNs
- Single subscription
  - HPLMN+VPLMN
- Dual subscription (MUSIM)
  - HPLMN1 + HPLMN2
- 3GPP access can be same/diff. RAT, e.g.
  - NR&NR, NTN&NTN
  - NR&LTE, NR&NTN

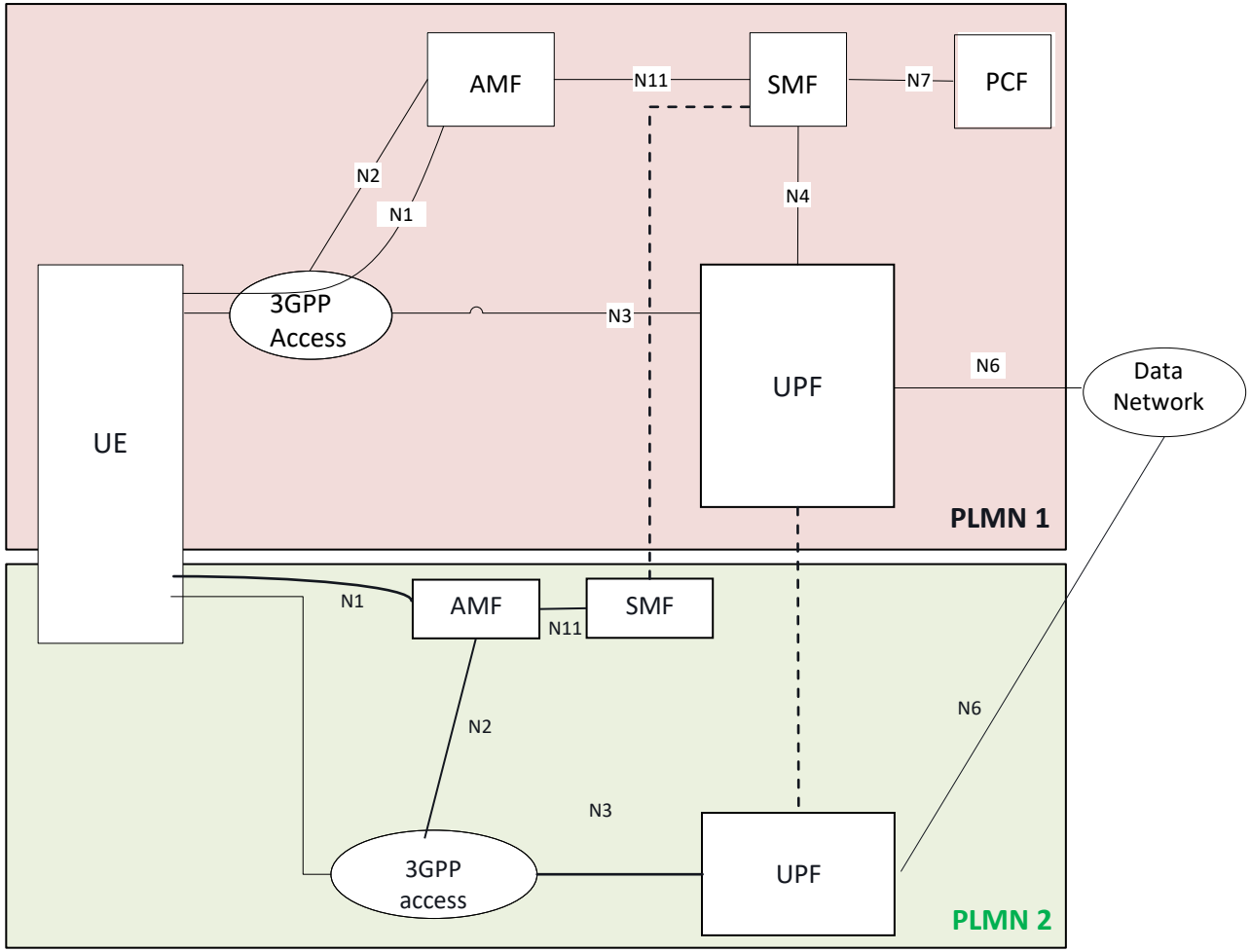

Fig shows only an example diagram - some of the interfaces may vary, e.g. based on the deployment & subscription scenario

Scenarios: PLMN + SNPN

Example of scenarios and connectivity diagrams

- Location covered by PLMN and local SNPN
  - permanent or temporary dual coverage
- PLMN and SNPN can be managed by the same operator or by two partner operators
  - No RAN sharing
- Single subscription, or Dual subscription
  - Dual subscription can be MUSIM or single-SIM (e.g. non-USIM credential for SNPN)
- 3GPP access can be same/diff. RAT, e.g.
  - NR&NR, NTN&NTN
  - NR&LTE, NR&NTN

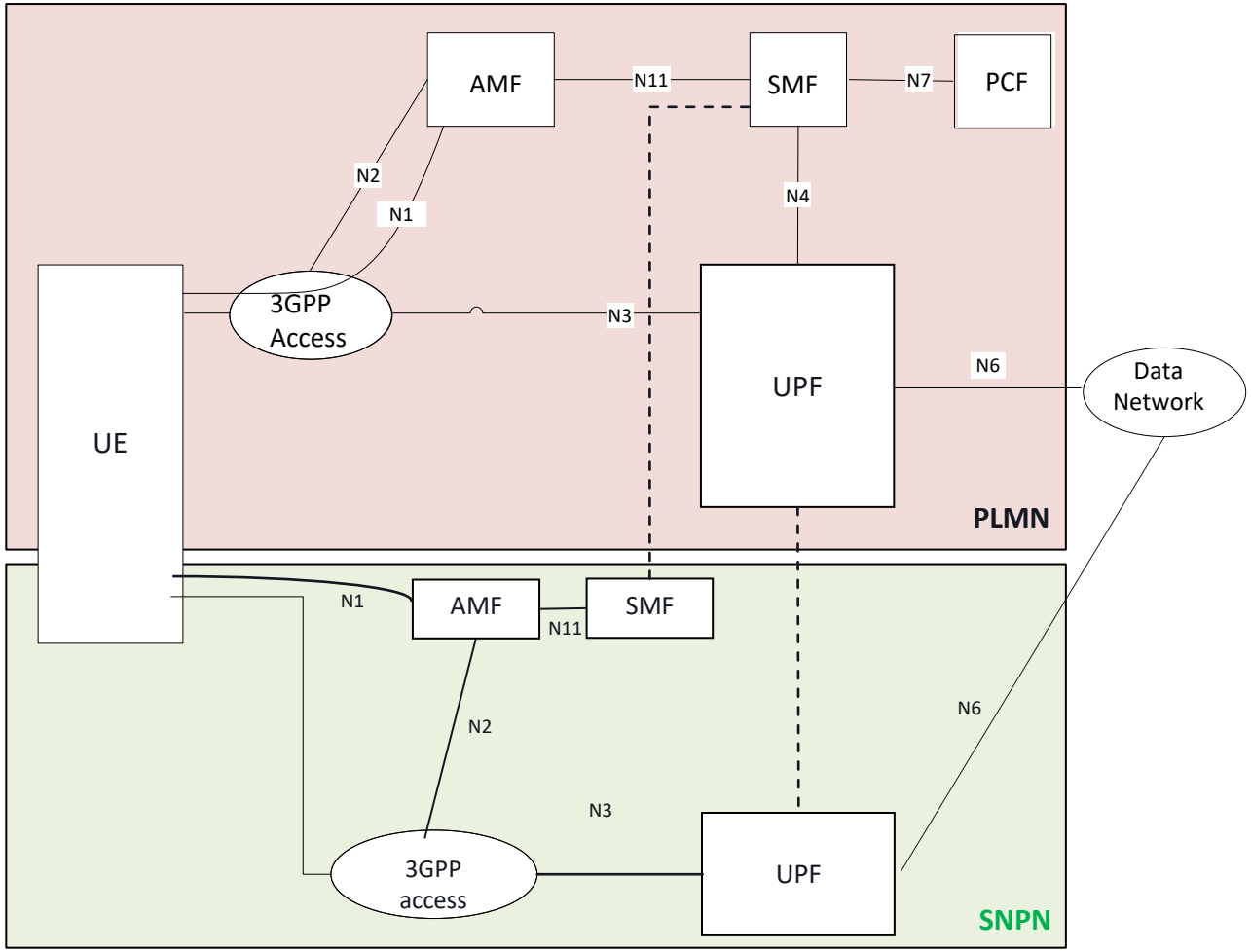

Fig shows only an example diagram - some of the interfaces may vary, e.g. based on the deployment & subscription scenario

Annex B

(Rel-16/17) ATSSS highlights

Qualcomm

ATSSS aspects

From 23.501

- The ATSSS feature is an optional feature that may be supported by the UE and the 5GC network.
- The ATSSS feature enables a multi-access PDU Connectivity Service, which can exchange PDUs between the UE and a data network by simultaneously using one 3GPP access network and one non-3GPP access network and two independent N3/N9 tunnels between the PSA and RAN/AN.
- The UE may request a MA PDU Session when registered via both 3GPP and non-3GPP accesses, or when the UE is registered via one access only.

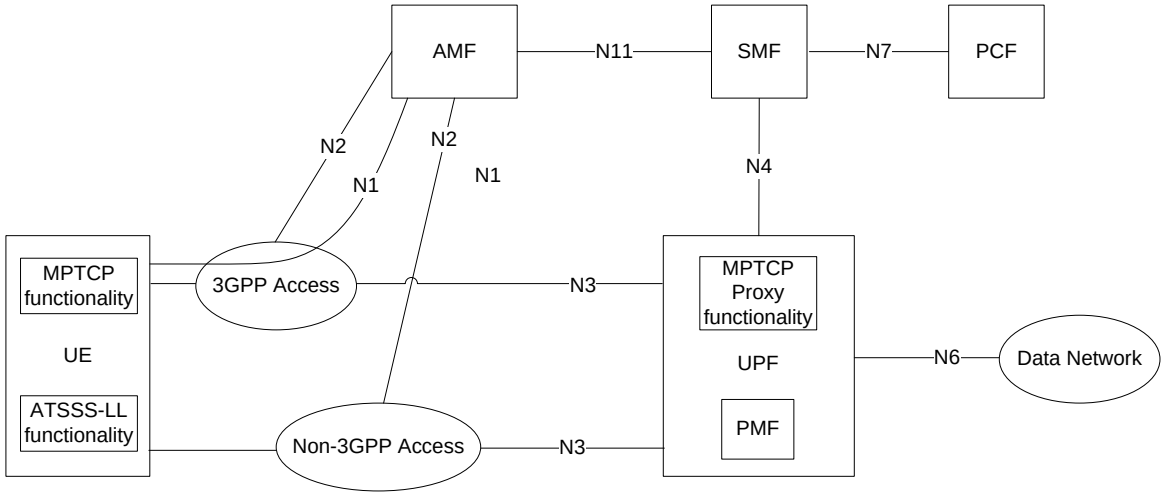

Figure 4.2.10-1: Non-roaming and Roaming with Local Breakout architecture for ATSSS support

The UE supports one or more of the steering functionalities, e.g. MPTCP functionality and/or ATSSS-LL functionality. The ATSSS-LL functionality is mandatory in the UE for MA PDU Session of type Ethernet.

The UPF may support MPTCP Proxy functionality, which communicates with the MPTCP functionality in the UE using MPTCP (IETF RFC 8684).

The UPF may support ATSSS-LL functionality (not shown in Fig)…ATSSS-LL functionality is needed for MA PDU of type Ethernet.

In addition, UE and UPF can support Performance Measurement Functionality (PMF), which may be used by the UE to obtain/report access performance measurements

The AMF, SMF and PCF are also extended with new functionalities.

ATSSS aspects

From 23.501

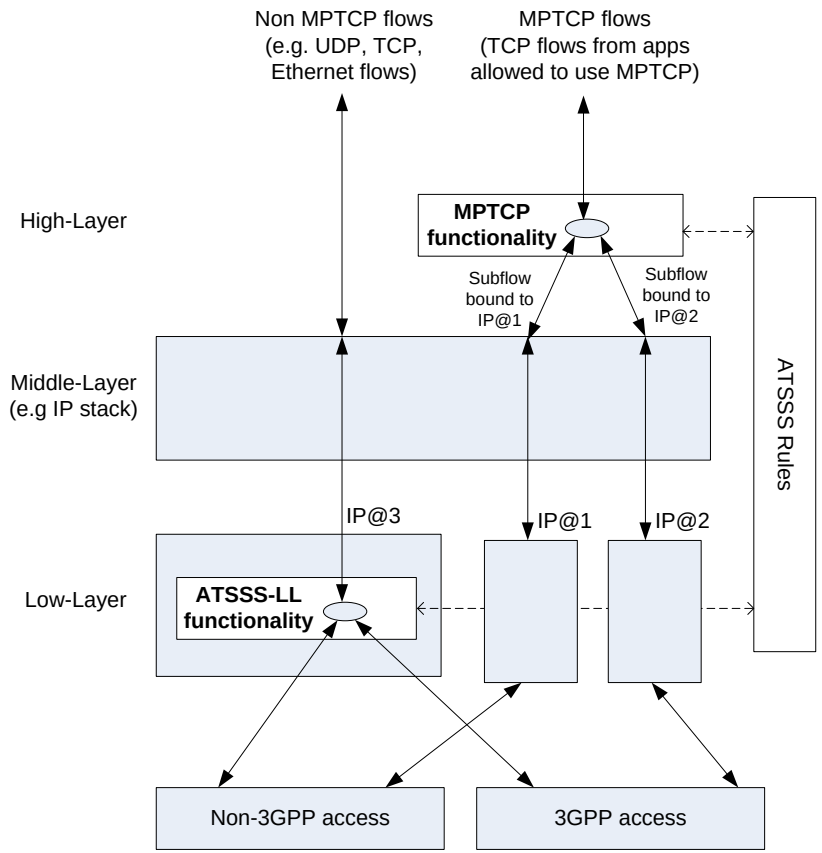

Steering functionalities in an example UE model

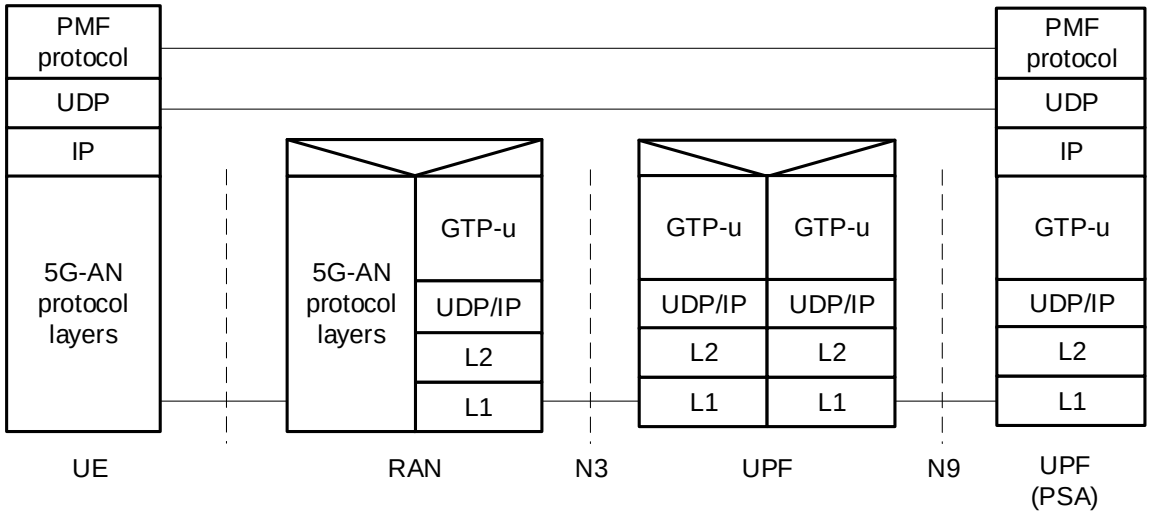

UE/UPF measurements related protocol stack for 3GPP access and for an MA PDU Session with type IP