Clarification Paper – EG.2
High level requirements for a in-vehicle system

2005-11-14

Author(s)

L.Strandberg/M.Haraldsson

Autoliv Electronics Europe

+

EG.2 members

Table of content

CHAPTER 1 - INTRODUCTION 1

1.1 WORKING PRINCIPLES FOR EG.2 1
1.2 OBJECTIVES 1
1.3 EG.2 MEMBERS 1
1.4 STAKEHOLDERS CONCERNED 2

CHAPTER 2 - EXECUTIVE SUMMARY 3

CHAPTER 3 - SECTOR DESCRIPTION 4

3.1 INTRODUCTION 4
3.2 OPEN ISSUES 5

CHAPTER 4 - EMBEDDED VS. NOMADIC 1

4.1 NOMADIC DEVICE 1
4.2 EMBEDDED DEVICE 1

CHAPTER 5 - COST ESTIMATIONS FOR IVS, EMBEDDED VS. NOMADIC. 1

5.1 FUNCTIONAL DIFFERENCES BETWEEN EMBEDDED VS. NOMADIC. 1
5.2 COST ESTIMATION 2

CHAPTER 6 - PSAP.1 REQUIREMENTS ON IVS 4

CHAPTER 7 - IVS FUNCTIONAL REQUIREMENTS 5

7.1 SIM OR NO SIM SOLUTION 5
7.2 LOCALIZATION ACCURACY 7
7.3 NAD REQUIREMENTS (GSM MODULE FOR EMBEDDED DEVICE) 7
7.4 VEHICLE INTERFACES: 8
7.4.1 AIRBAG CONTROL UNIT INTERFACE 8
7.4.2 INTERFACE MANUAL TRIGGER 8
7.4.3 AUDIO INTERFACES (MIC, SPEAKER) 8
7.5 AUTOMOTIVE REQUIREMENTS: 8

CHAPTER 8 - TRANSPORT PROTOCOL/BEARER 9

8.1 INTRODUCTION **9**
8.2 PROTOCOL **9**
8.3 DATA BEARER **9**
8.4 CONCLUSIONS **9**

CHAPTER 9 - CONCLUSION 10

CHAPTER 10 - REFERENCES 11

Chapter 1 - Introduction

1.1 Working principles for EG.2

The approach for establish the EG.2 Clarification Paper has been that all EG.2 members has been asked to give input to the paper, Autoliv has then compiled the inputs into the document. The work has been done via e-mail and telephones conferences, no face to face work shop has taken place.

1.2 Objectives

1. To define if an E-Call generator system must necessarily be composed by in-vehicle mounted devices, or if at list some components could be Nomadic Devices
    a. Cons. and Pros. Embedded vs. Nomadic
    b. Cost estimations for IVS, embedded vs nomadic.
    c. Create block diagram for both systems.

2. Fact finder study on requirements for the In-Vehicle System and a nomadic device based on the results from "PSAP.1"
    a. Extract requirements from "PSAP performance and requirements.doc" that are related to IVS.

3. Define the high level functional spec. for a in-vehicle system and/or a nomadic devise as the eCall generator

1.3 EG.2 members

Autoliv Electronics:

Lennart Strandberg, lennart.strandberg@autoliv.com

Magnus Haraldsson, magnus.haraldsson@autoliv.com

Motorola:

Alfred Krappel, alfred.krappel@motorola.com

Magneti Marelli:

Gianmaria Tomossi, gianmaria.timossi@mmarelli-se.com

SonyEricsson:

Darren Stratton, darren.stratton@sonyericsson.com

Stefan Gudmundsson, stefan.gudmundsson@sonyericsson.com

Sagem:

Emilie Berger, emilie.berger@sagem.com

Siemens:

Andreas Kohn, andreaskohn@siemens.com

Wavecom:

Olivier Beaujard, olivier.beaujard@wavecom.com

1.4 Stakeholders concerned

EG.3 Define and specify the in-vehicle system (ACEA), main concern is the cost for a embedded solution and the lead time to integrate the system in the vehicle, lead time from decision and to launch of the vehicle is approximately 3 years, this means that the cars that should be on the market 2009 need to be specified now (Q4 2005)

BC.4 Develop the business case (insurance companies), BC.4 pointed out that additional services like Theft Notification and Vehicle Tracking System would make the business case stronger

Chapter 2 - Executive summary

The specification must be on a high level and focus functional requirement, the detailed implementation of the system will differs from one car manufacturer to another.
On other important issue is that the document writhen in the DG eCALL group can not describe solutions that are company proprietary as this information will be available for competitors.

One main issue that have been discussed is Embedded vs. Nomadic devise, it obvious that the different steak holder promote solutions that will give business benefits to the own company
The conclusion is that both system solutions will work.

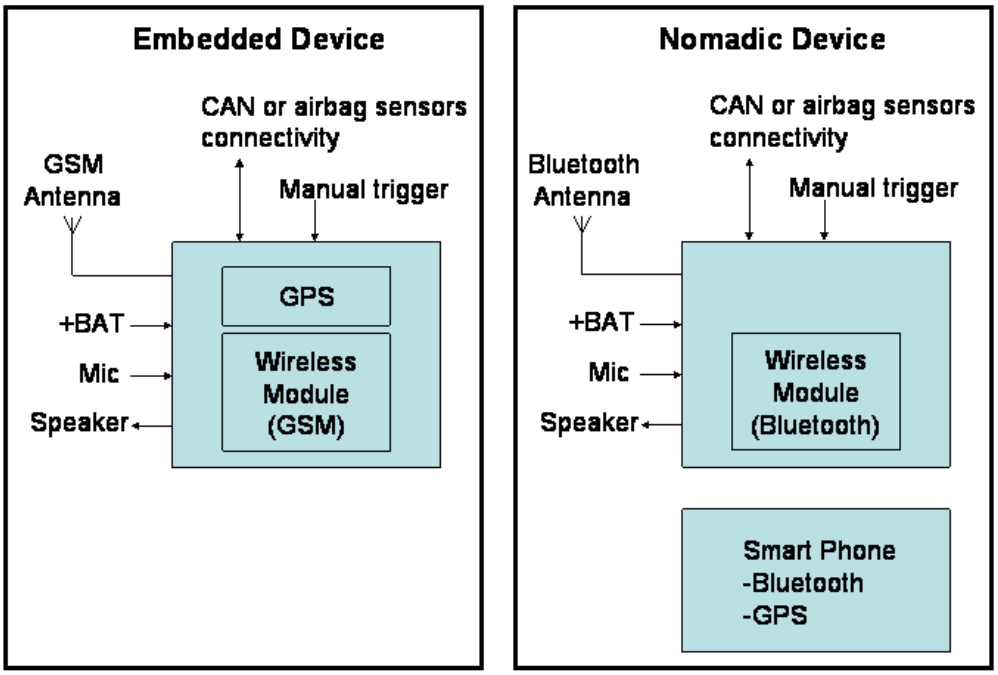

The benefit with not specifying Embedded or Nomadic system is this will allow e-CALL system based on Nomadic solution in low end cars (low cost) and Embedded solutions in mid/high end cars.

One other main discussion has been SIM vs. no SIM.
The main advantage with the no SIM approach is that there will be no additional cost for the SIM and that the system will work if the SIM is removed (no risk for SIM removal), the main disadvantage it that some operators does <u>not</u> allow 112 call from a device that has no SIM and that it <u>not</u> will be possible to reconnect to the vehicle from the PSAP if the connection is lost (no phone number to call)

Chapter 3 - Sector description

3.1 Introduction

Since the E-Call generator must be able to generate the E-Call in almost every condition, typical requirements are:

1. Crash proofness: the E-Call generator must continue to work after a crash
2. Capability to work even if the primary car power supply is damaged or the interfaces have been broken (ie outside antenna)

In principle, all these requirements could be respected both by a system completely integrated in the car and by a system at least partially composed by Nomadic Devices; in fact, Nomadic Devices:

1. Have their own power source
2. Can be installed in dedicated compartments in the car that protect them against shocks.
3. Need to interact with vehicle sensors via wired or wireless links
4. Signal reception is not fully optimized within a car without external antenna (due to new athermic windows for instance)

(Remark: The number of Bluetooth enable phones shall be high enough to become pervasive)

On the other hand, experience about how people use Nomadic Devices in the car shows that people don't use special care; for instance Bluetooth phones are usually left in pockets, so that:

1. Proper battery charge is not ensured
2. In the same way, protection against shocks is not ensured

About point number 2, the car could be fitted with a dedicated compartment, in which the Nomadic Device should be put by the user; even in this case some questions are still open:

1. Since Nomadic Devices differ one from the others in terms of shape and dimensions, but also connectors for voice and data communication, how can a generic fixation system be designed, in order to ensure also that the Nomadic Device itself is protected against shocks, and provide hands-free communication to injured persons
2. How can be ensured that the user puts the Nomadic Device in the dedicated compartment?

3.2 Open issues

1. asking for a standardization of some features of Nomadic Devices, e.g.:
    a. battery
    b. fixing points
    c. maximum dimension
    d. connectivity (voice, data, antenna, Bluetooth profiles)
2. putting some alerts that make very uncomfortable to drive if the Nomadic Device is not properly installed (for instance, in the same way that is already performed in order to encourage to fasten safety belts)

Chapter 4 - Embedded vs. Nomadic

4.1 Nomadic device

Pros	Cons
Cost: Use of existing customer's equipment (if compatible with onboard node and application) Likely higher adoption (due to assumed lower costs and flexibility).	**No call** during the following situations: Requires that the driver brings his phone, risk for incompatible device, Device is off, BT off, no BT in handy, batteries are drained. BT pairing not realized or user error. If the device don't work after impact/crash or has been ejected from the car! Bad or no reception, no external antenna. No automatic roaming enabled (in phone) Call already in progress **Automotive requirements:** Car environment (ex. temp req. -40 to +85 deg.) The phone does not work in -40 deg? Validation needs for each new phone? The introduction of new equipment/features in cars is subject to stringent methods and planning for which the E-call introduction needs to be aligned
Flexible solution: Allows occupants to leave vehicle while keeping in line with rescue Convenient - phone can remain in pocket, purse, etc. No clutter required in the car (holder, wires, etc.)	**BT profile:** In order to use nomadic to trigger the call and send MSD, there might be a specific BT profile. It doesn't exist yet, and will likely not be available on any new phone soon. Market adoption to be further investigated.Could be limited to high range mobiles at beginning
Positioning: Use location from nomadic (if precise enough) will reduce cost If possible, use the build in GPS in a smart phone. Possible usage of the GPS data from built-in navigation system	**Location/GPS:** Nomadic will be inside the vehicle without aerials: even with latest a-GPS, location is not secured for a trip duration; location enables mobile could keep Marginal offer at early stage
Features: Allows customer to update/upgrade its nomadic to get more services.	**Keep it simple:** e-Call doesn't require sophistication but reliability. Concern about how OEMs will keep car's node in line with new devices Interoperability between each mobile phone and onboard node can not be guaranteed. (See issues at existing BT handsfree speaking devices).
Other The nomadic device can be sponsored by telecom operators. No SIM-card issues (use existing private SIM) What if the driver don't have a phone with him (lost, stolen, or even no phone)	On board node is leaving to customer the choice to get compatible device and to make it work for each trip : non systematic approach would likely kill any public/insurance incentive approach

4.2 Embedded device

Pros	cons
Safety/security: Car standard compliant and robust design will secure function in most accident situations Embedded device would allow a more secure link to on-board electronic and better REM control Secure functionality due to limited and tested services. No risk of changing parameters – like it is possible with a mobile phone today	**Automotive requirements:** Car industry standards are requiring more expensive components when nomadic is just complying to electronic standards Technology is frozen for vehicle's life (but e-Call is not requiring high tech !) The introduction of new equipment/features in cars is subject to stringent methods and planning for which the E-call introduction needs to be aligned
Cost: Less diversity would allow standard design, then likely volumes to few OES and low costs The system and incentives from insurance companies, we are already building products today that contain a GSM engine and these products are subsidised by insurance companies.	**Cost:** Specific cost added to vehicle price tag if no public or insurance support This pledge to push for a “more than E-call” usage where additional services could be provisioned (insurance, remote diagnostics, service providers)
Features: Embedded device could allow other car related telematic like safety and security, and remote control and diagnostic without needing anyone in. Can be linked or embedded into other on-board electronics, allowing further cost reduction and applications SVT service: to track the car in case it's being stolen , but the concept is already there and we believe that it could be feasible.	**ISO TC204 and ETSI working in Liaison:** To be viable, the Standards need to have a useful life of 10-15 years This means that a car new in 2010 will still need to use the system in 2030, and a car manufactured 10 years after will still require the service in 2040 !!! (Therefore whatever Standards we develop must be able to migrate as telecommunications technology changes.) Wireless systems evolution (what if GSM is 100% replaced by UMTS or even newer technology?)
Only scenario allowing systematic fitment and activation, then supporting rapid ramp up IF PUBLIC and/or INSURANCE FINANCIAL INCENTIVE	Coverage issues: what if no wireless coverage (also applicable to nomadic device)
Validation: No validation needed for each new mobile phone on the market.	
Life cycle of the embedded system is a problem that can be overcome – we can think that a module integrated in an embedded system could last 10 years whereas we can't expect a Nomadic device to have such a lifetime.	

Chapter 5 - Cost estimations for IVS, embedded vs. nomadic.

5.1 Functional differences between embedded vs. nomadic.

The table below includes the functions needed in the vehicle embedded part of the system.

	Embedded	Nomadic
NAD (GSM module)	X	N/A (*)
GPS	X	N/A(*)
Bluetooth	N/A	X
Vehicle interface (CAN, Buttons)	X	X
CPU	X	X
Memory	X	X
Connectors	X	X
Power supply	X	N/A (**)
External antenna interface	X	N/A
Housing	X	X
SIM Card Holder	X (***)	N/A
Back-up battery and antenna	Optional	N/A

* The cost for a nomadic device with GPS (smart phone) will be an added cost for the customer.

** The nomadic device needs to be charged.

*** SIM or no SIM discussions (se chapter 7.1 SIM or No SIM solution)

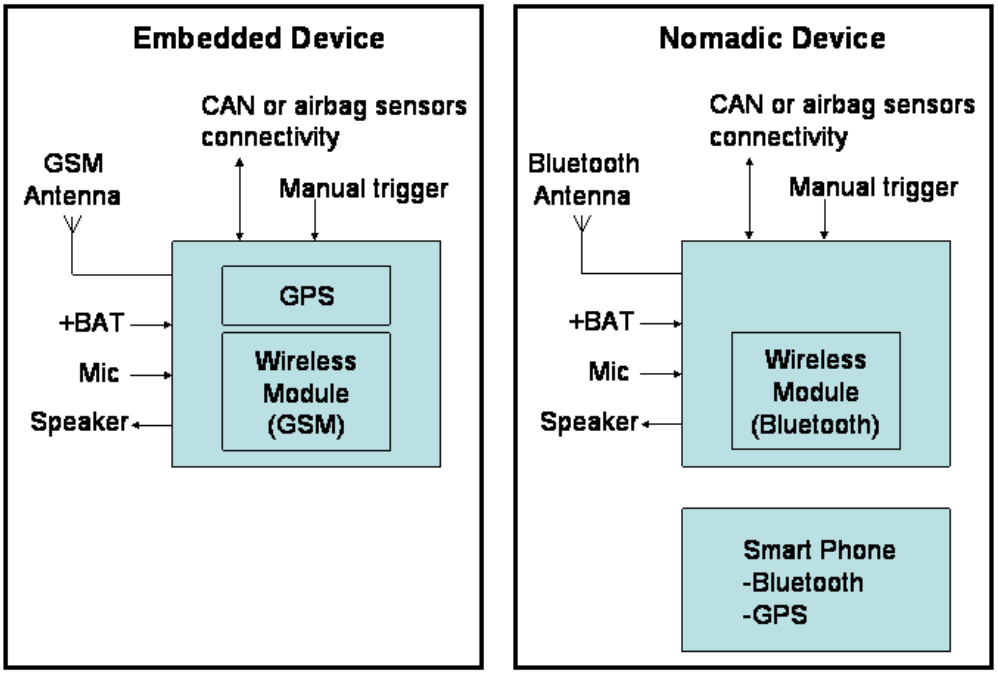

Nomadic device might require a new Bluetooth profile that supports transmission of trigger and MSD to the smart phone and transmission of acknowledge from the smart phone to the on board part of the Nomadic system.

5.2 Cost estimation

The cost estimation does not include costs for microphone, speaker, MMI (manual trigger), external antennas.

Embedded Device:
On board device cost for automatic E-Call will be <100 Euros in 2009, even for relatively low volumes. This cost is related to a crash-proof solution able to perform the following functions:

- Positioning (GPS + dead reckoning)
- Communication protocol management (SMS or data)
- Airbag signal management
- Power supply management, with integrated backup battery

Comments:
The major difference from embedded system to nomadic based system would be the cost difference between wireless module and link to nomadic device.
From a BoM perspective the nomadic device solution would be cheaper, but its drawbacks are bigger (Bluetooth penetration, standardization of connectors) than the embedded device which could be also used for other purposes. An order of magnitude of BoM comparison is half of

embedded solution. However, it shall be highlighted that there is no pervasive connectivity solution which can guarantee full compatibility with any device. This leads to the need of additional device (smartphone, phone, wireless PDA) which will add a cost of 50 to 500 Euros (according to the chosen device).

Chapter 6 - PSAP.1 requirements on IVS

Action s to be taken: Extract requirements from “PSAP performance and requirements.doc” that are related to IVS.

Chapter 7 - IVS functional requirements

7.1 SIM or No SIM solution

With SIM	**Pros**	**Cons**
Safety / Security	Clear Identification of the calling device through the SIM id.	The SIM can be removed either in a crash or stolen, then the security feature becomes unavailable.
Environmental Requirements The overall application must comply with automotive constraints		SIM plus holder specially qualified to support required Temperature / Humidity / Vibration levels.
Operator	All Operators will allow 112 calls Ownership of the SIM • Clear identification of the devices • Billing identification • Can allow extended services and data communication	
Cost		Who pays the service (subscription + communication) ? BOM : SIM holder, Accessibility of the SIM
Features	SIM presence can allow additional features • Update of SIM data by operators • SMS / GPRS calls (telematics, maintenance, …)	Additional features might interfere with emergency calls (additional validation)
Validation		Need to validate the solution with SIM providers for • SIM characteristics (levels, speeds, features) • Environmental constraints • Additional features present at the same time
Life cycle		Embedded solution life cycle is linked to SIM life cycle • Hardware life cycle (Temp/humidity/vibratio

		n) • Network life cycle (compatibility with networks)

Without SIM	**Pros**	**Cons**
Safety / Security	No risk of SIM removal.	No clear identification of the caller. Not possible to establish a call from PSAP to the vehicle (no phone number to dial)
Environmental Requirements The overall application must comply with automotive constraints	Embedded device qualified by design, self compliant from the beginning.	
Operator		Not sexy for operators, only a network cost item for emergency calls without possibility of additional source of revenues. Not all operators allow 112 call without a SIM.
Cost	No additional cost, no SIM holder, no SIM accessibility constraint	
Features	Dedicated to emergency call only,	No possibility of additional features, only emergency scope
Validation	Off the shelf embedded device validated for emergency calls.	
Life cycle	Same life cycle as the embedded device	

7.2 Localization accuracy

Is accuracy a real issue?

- As mentioned during the MSD definition meeting, we need to know which direction was the vehicle heading to before the crash (using the last 30sec positions), and a 10m accuracy should be more than enough. (from a practical perspective anybody can see a crashed car 10 meters from him)

7.3 NAD requirements (GSM module for embedded device)

Communication requirements RF / Radio Requirements

- At least dual band 900/1800 MHz
- At least GPRS
- A-GPS support?

HW interfaces support

- General IO-Ports
  - for direct link to airbag deployment signal
  - for generic inputs / outputs
- Standard buses UART / I2C / SPI / parallel / USB / …
- Audio : Hands-free, echo cancellation
- External antenna support

Power management

- Low power consumption modes

SW support

- Open platform that for application SW in NAD
- API allowing to take advantage of available communication / interfaces / power management

Conformance requirements

- The NAD (GSM module) has to support 'eCall' as defined at ETSI (see chapter 8).
- Supplier certified according ISO/TS16949
- Automotive qualified regarding reliability test (shock, temperature, vibration, …)
- IMDS listed
- GADSL compliant

7.4 Vehicle Interfaces:

The vehicle interfaces are depending on vehicle manufacturer, for example the transport layer of the CAN network differs from one manufacturer to another. Therefore the interfaces must be specified by the actual car manufacturer; only the content of the data needed for the e-CALL system should be specified.

7.4.1 Airbag Control Unit interface

7.4.1.1 Physical interface (CAN, LIN…)

This will most probably not be standardised, it will be different from one manufacturer to another depending on vehicle architecture.

7.4.1.2 Triggers & Thresholds

7.4.2 Interface manual trigger

The requirement is that there should be a manual trigger. The interface will most probably not be standardised, it will be different from one manufacturer to another depending on vehicle architecture.

Would it need an additional switch anywhere in the car's interior, meaning new interaction with car interior's design? Possible re-use of existing mayday lights (long press on button)?

7.4.3 Audio interfaces (mic, speaker)

The requirement it that there should be a e-CALL speaker and microphone.

Most car manufacturer is to day using the car Audio system amplifier and speaker for Hands Free telephony, from crash worthiness aspect the e-CALL system needs a dedicated speaker.

It is important to pursue autonomy of e-CALL system therefore a dedicated speaker and microphone must be used.

7.5 Automotive requirements:

The in vehicle system must fulfill the automotive requirements:

- Operating temperature rage (-40°C to +85°C)
- EMC compatibility
- Reliability
- Resistance to shock, vibrations, corrosion, water

Chapter 8 - Transport protocol/Bearer

8.1 Introduction

When the eCall unit has detected a crash, a voice connection to PSAP shall be established. Together with the voice call, the PSAP operator should be able to get the position of the car and the triggers that caused the eCall initiation, and all the other data included in MSD (minimum set of data).

8.2 Protocol

The protocol to use is not decided yet, but strong candidates are:

- GTP (Global Telematic Protocol)
- GSM Signalling protocol

8.3 Data bearer

How to send data over voice is not decided either at this point, but the discussions are including following candidates:

Data not over voice channel

- USSD (Unstructured Supplementary Service Data)
- UUS.1 (User to User signalling)
- SMS (Short Message Service)
- UMTS (Universal Mobile Telecommunications System)

True data over voice

- Airbiquity (modem over voice channel)
- DTMF (Dual Tone Multiple Frequency)

8.4 Conclusions

Which protocol and data bearer that shall be the standard for eCall is depending of the outcome from ETSI.

Chapter 9 - Conclusion

Please summarize and draw conclusions to the work here. Include as well eventual issues that still need to be investigated and/or clarified.

Chapter 10 - References

PSAP performance and requirements.doc