Fixed-mobile convergence related issues

Motivations, Use Cases and Proposal

China Telecom

Motivations

Network operators providing both fixed broadband and mobile 5G services seek to unlock new business opportunities by facilitating fixed-mobile convergence. In R19, this convergence can be performed in two directions: one is to enhance multiple accesses (e.g. non-3GPP) to 5G, which is discussed in use case 1; and the other is to utilize the capability of 3GPP systems (e.g. authentication, mobility) to improve user experience when users are served by non-3GPP systems. This is detailed in use case 2.

Use Case 1 (1/5)

➢ **Use case #1:**

To ensure data security, the school deploys its own servers inside the campus to store data for local service (e.g. educational resources, school rules and regulations), exclusively for the use of school personnel.

1. Users (e.g. students and staff) access campus network to obtain educational resources. **All data traffic is routed locally inside the campus for security purposes.**
2. Users access the Internet for social media, web browsing, and other activities. **Data traffic is routed off-campus.**

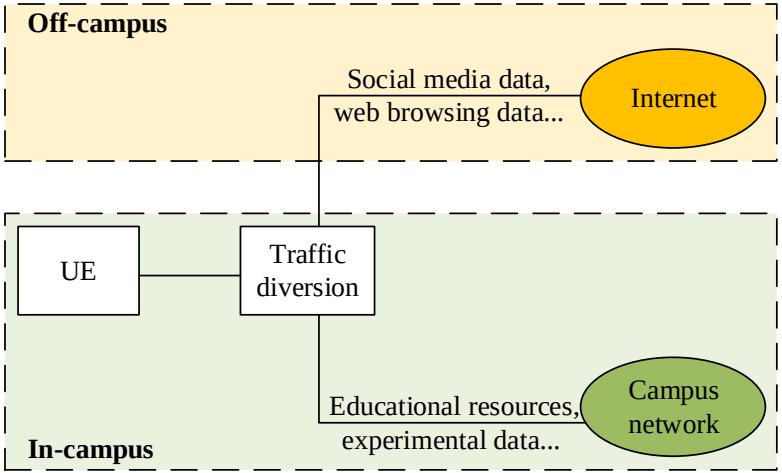

Use Case 1 (2/5)

➢ **Service flows:**

1. Bob is in the lab. His UE is registered to 5G over WLAN access and NR access simultaneously.
2. He uploads a high-resolution tutorial video to the campus network, while he messages friends on social media.
3. The UE dynamically distributes uplink traffic across **two accesses and four data paths** based on network-provided policy and local conditions:
   a) When some/all of the uplink traffic is routed across WLAN access, the traffic for video is offloaded via route A. The traffic for messaging is routed via route B.
   b) When some/all of the uplink traffic is routed across NR access, the traffic for video is offloaded to the campus network via route D, while the traffic for messaging is routed via route C.

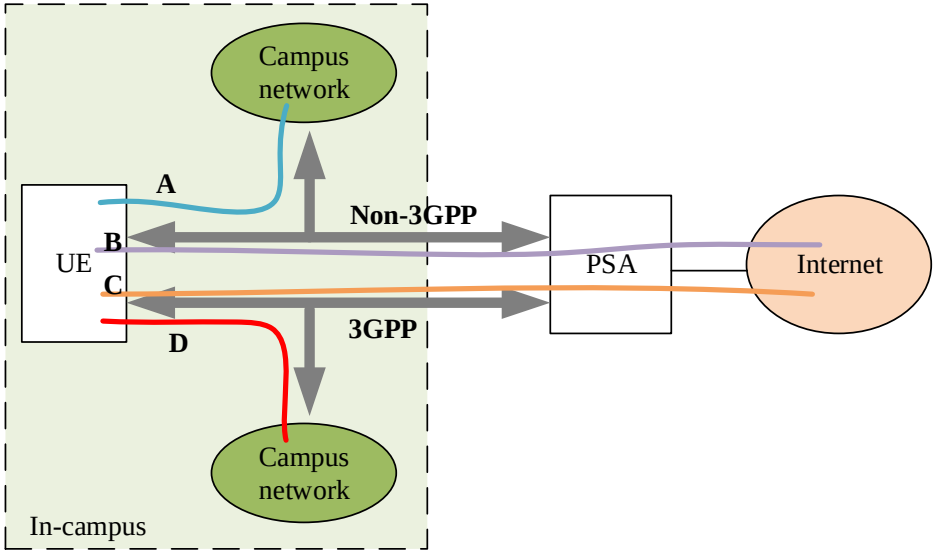

Use Case 1 (3/5)

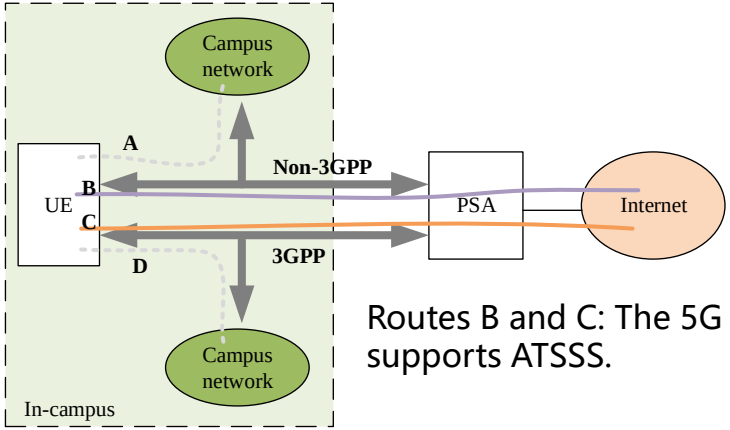

Routes B and C: The 5G system supports ATSSS.

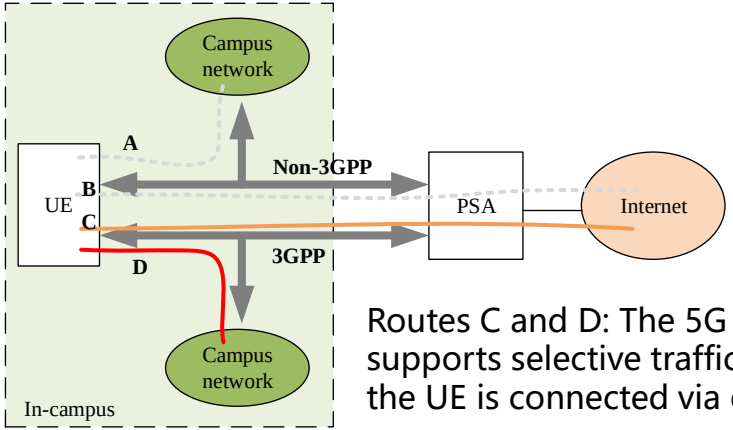

Routes C and D: The 5G system supports selective traffic routing when the UE is connected via one access.

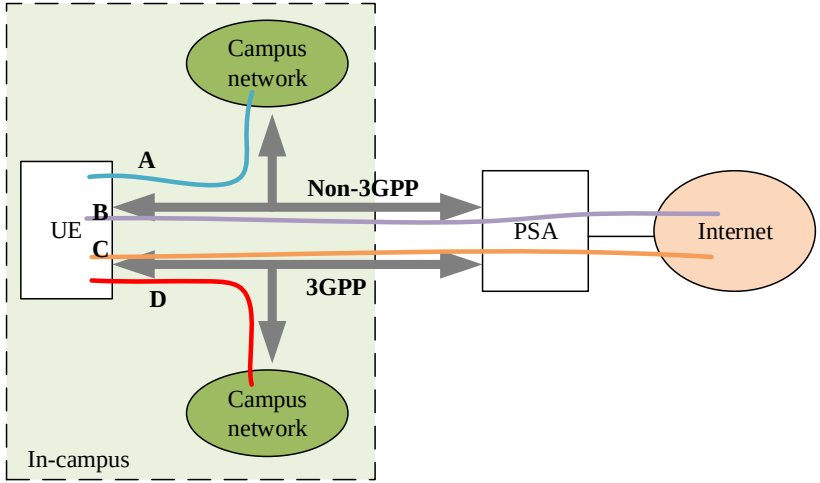

Proposal: The 5G system shall support traffic routing on each access when the UE is connected via multiple accesses. In addition, multiple accesses and diverse traffic routing on each of them lead to multiple data paths (routes A to D). Data transmissions shall be optimized considering different available data paths.

Use Case 1 (4/5)

➢ Gap analysis 1:

Requirement 1 in TS 22.261: Based on operator policy, the 5G system shall be able to dynamically offload part of the traffic (e.g. from 3GPP RAT to non-3GPP access technology), taking into account traffic load and traffic type.

- Requirement 1 specifies that the 5G system shall be able to support dynamic traffic offload among different accesses when the UE is connected via multiple accesses.
- To enable data path selection/optimization, it is proposed to support traffic routing on each access when the UE is connected via multiple accesses.

New requirement: Based on operator policy, the 5G system shall be able to support traffic routing on each access for UEs that are simultaneously connected to the network via different accesses.

Use Case 1 (5/5)

➢ Gap analysis 2:

Requirement 2 in TS 22.261: The 5G system shall be able to support data transmissions optimized for different access technologies (e.g. 3GPP, non-3GPP) for UEs that are simultaneously connected to the network via different accesses.

- Requirement 2 specifies that when there are multiple accesses available, data flows shall be **optimally** distributed among these accesses.
- Because of traffic routing supported on each access, there will be multiple data paths. **The 5G system shall be able to optimize data transmissions considering these potential data paths.**
- Therefore, we propose to include **data paths** in Requirement 2:

Requirement 2: The 5G system shall be able to support data transmissions optimized for different access technologies (e.g. 3GPP, non-3GPP) and data paths (e.g. local traffic routing) for UEs that are simultaneously connected to the network via different accesses.

Use Case 2 (1/3)

➢ Use case #2:

According to our internal report, the majority of indoor data traffic is transmitted through wired broadband (e.g. fiber). An example business scenario is proposed where UE can automatically connect to a public WLAN wherever it is available. This public WLAN

a) relies on existing home/business WLAN networks set up by wired broadband and wireless router. It leverages the infrastructure already established and extends the internet connectivity provided by fixed network. The subscribers of fixed network who join the public WLAN plan as a provider/contributor are rewarded.

b) has a unified SSID and password that update periodically. UE can use this public WLAN in areas served by the fixed network without manual selection.

➢ Pre-conditions:

The 5G network and the fixed network are owned by the same operator. Or the two operators have business level agreement so that the 5GC knows the latest SSID and password to be distributed to the public WLAN subscribers.

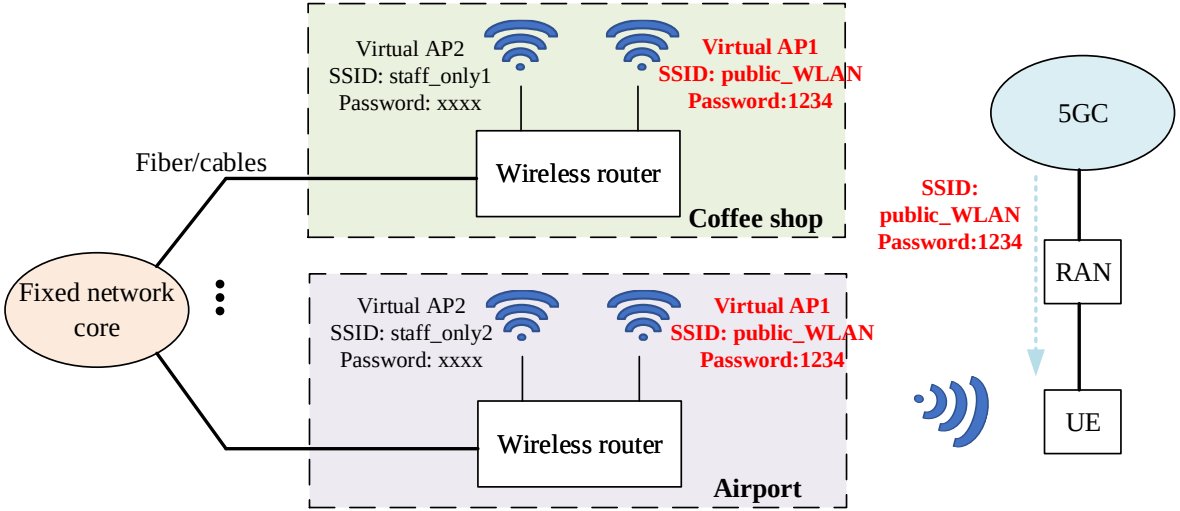

Use Case 2 (2/3)

➢ **Service flows:**

1. The UE is authenticated and registered to 5G (HPLMN). As he subscribes to the Public-WLAN service, he obtains the latest SSID and password from 5GC.
2. The UE moves to a coffee shop. This coffee shop has joint the Public-WLAN plan as a provider, the router in the shop broadcasts the SSID. The UE receives the SSID and connects to the Public-WLAN automatically. The UE obtains a good wireless internet connection despite insufficient 5G indoor coverage.
3. The UE moves to a crowded airport. The 5G speed is low because of the large number of connected passengers. The airport also joins the Public-WLAN plan as a provider and all routers broadcast the same SSID. The UE automatically connects to the Public-WLAN and gets a high-speed internet service.
4. The UE travels abroad and registers to VPLMN. He receives SSID and password used in the visited country and obtains the Public-WLAN service.

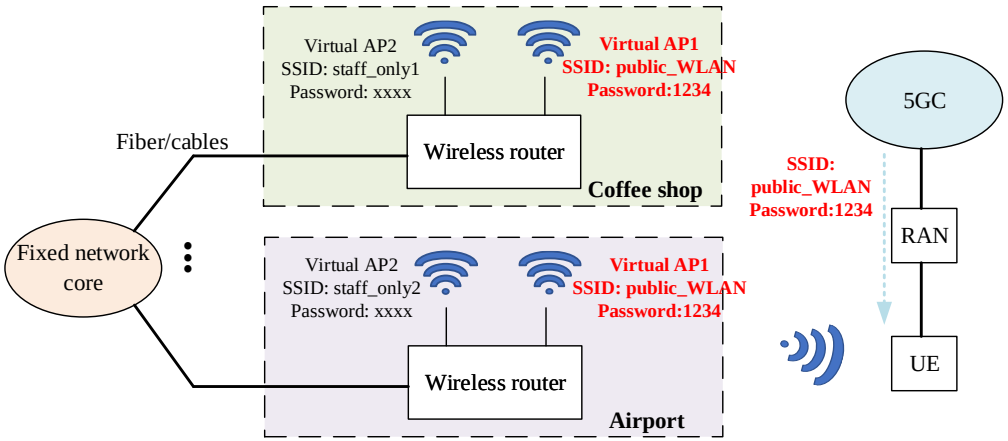

NOTE: When the UE obtains service from the Public-WLAN, user traffic is routed without traversing the 5GC. This use case does not require N3IWF deployment.

Use Case 2 (3/3)

➢ **Gap analysis:**

- The UE with subscription to the Public-WLAN service obtains SSID and password from 5GC (HPLMN/VPLMN), when he is authenticated by 5G. For example, he can receive/update these non-3GPP credentials during 5G registration. Then he uses these non-3GPP credentials to register to non-3GPP systems with the authenticated identity.
- To facilitate the convergence of 3GPP and non-3GPP networks and utilize the existing authentication capability of 5G, it is proposed to add a new requirement as below:

New requirement: The 5G system shall be able to support the distribution of non-3GPP credentials (e.g. SSID and password), so as to assist the authentication in non-3GPP systems.

Proposal

Based on use case 1, this proposal aims to introduce the following changes in TS 22.261 Clause 6.3 Multiple access technologies:

- New requirement:

Based on operator policy, the 5G system shall be able to support traffic routing on each access for UEs that are simultaneously connected to the network via different accesses.

- Modified existing requirement:

The 5G system shall be able to support data transmissions optimized for different access technologies (e.g. 3GPP, non-3GPP) *and data paths (e.g. local traffic routing)* for UEs that are simultaneously connected to the network via different accesses.

Based on use case 2, this proposal aims to introduce the following change in TS 22.261 Clause 8.3 Authentication:

- New requirement:

The 5G system shall be able to support the distribution of non-3GPP credentials (e.g. SSID and password), so as to assist the authentication in non-3GPP systems.

THANKS

感 谢 聆 听