SA Rel-18 Workshop
9-10 September 2021 Online
SP-210632

Rakuten Mobile’s view on Rel18

Rakuten Mobile

Background

- **Rakuten Mobile** is the 4th new and the E2E virtualized MNO in Japan. For such newly joined MNO, one of the most important concern is the "**coverage**".
  - We believe the scope for the future mobile NW to provide the Ultimate coverage 100% even if there is no people e.g. deep in the forest, top of the mountain. It is expected such "Ultimate coverage" plays the important role not only in the case of emergency, but also in the normal cases
- To provide mobile NW services more smoothly and efficiently, It is also expected much more "**automation"** shall be introduced for NW/UE configuration and operation.
  - NW automation and AI/ML should be enhanced for example NTN specific operation or harmonized with virtualized NW. And also URSP is beneficial to accommodate a lot of customer devices without configuration changes by customers and to make customers use MNO's application effectively.

Rakuten Mobile's View for Rel18 Study

- ✓ **Further NTN/ Satellite Access enhancement**
  - ✓ RAT Fallback(NTN<=>TN) for IMS voice or Emergency call, Dual Connectivity.
  - ✓ Service Continuity, Access Control between NTN and TN
  - ✓ MINT(Rel17) applicability to NTN

- ✓ **eNA Ph3/Application Layer AI/ML**
  - ✓ For the NTN specific operation e.g. UE location (non-GPS)

- ✓ **URSP enhancement**
  - ✓ operator-specific traffic categories

- ✓ **VMR, XR/VR, NW Slice and the other related Rel-18 Study**

NTN enhancement for Rel18

From the operator's perspective, more Flexible NTN deployment on the existing TN should be considered e.g. both **TN and NTN deployed in the same PLMN, same coverage or same frequency band**. And also NTN should provide the services provided by TN as much as possible.

- Voice, Emergency call continuity between TN-NTN (incl. RAT Fallback)
- Some "devices" may not be restricted to access the specific NTN area even the device support NTN capability and the contract. To achieve such "device"-based access control, existing EIR is not used but the enhancement or the other solutions could be considered?
- Different TAs will be configured at the same area. Study the efficient Paging reachabilty, how to reduce the signaling, access control with Existing Solutions e.g. Forbidden TA. And in case of emergency, Rel-17 MINT is applicable on the NTN scenario?

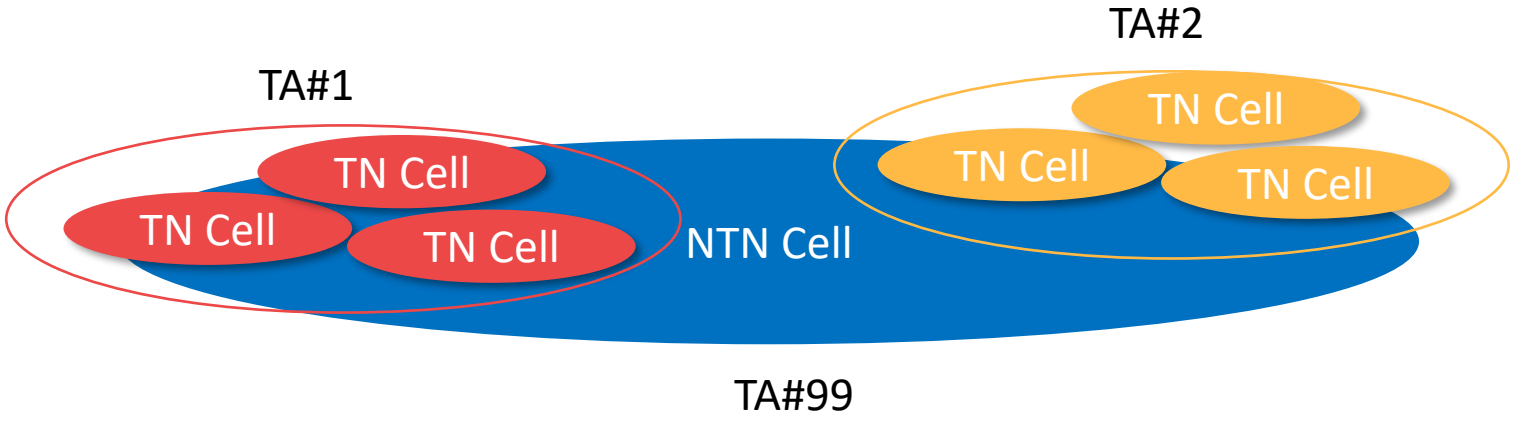

Network Automation, AI/ML

- In case of NTN, it is known the large coverage Cell can cause the mis-operation e.g. on CGI based PSAP on the emergency call. It is meaningful to study NWDAF can be available to improve such scenario.
- UE location information analysis, acquire information from LRF
- Paging and Tracking Area setting improvement
- Application based AI/ML can also be considered for such NTN specific operation e.g. expected coverage information

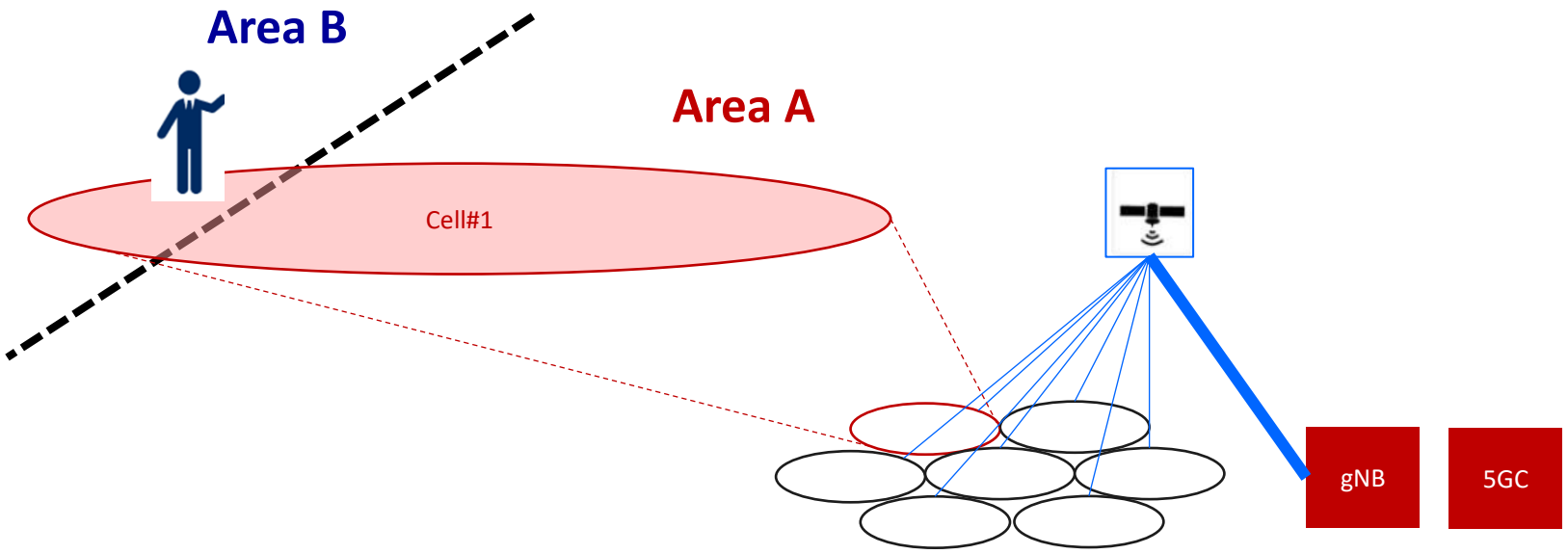

Enhancement of 5G UE Policy

- Investigate how to support standardized and operator-specific traffic categories in traffic descriptor of URSP For Operator specific Application.
- URPS also should be supported in the roaming scenario

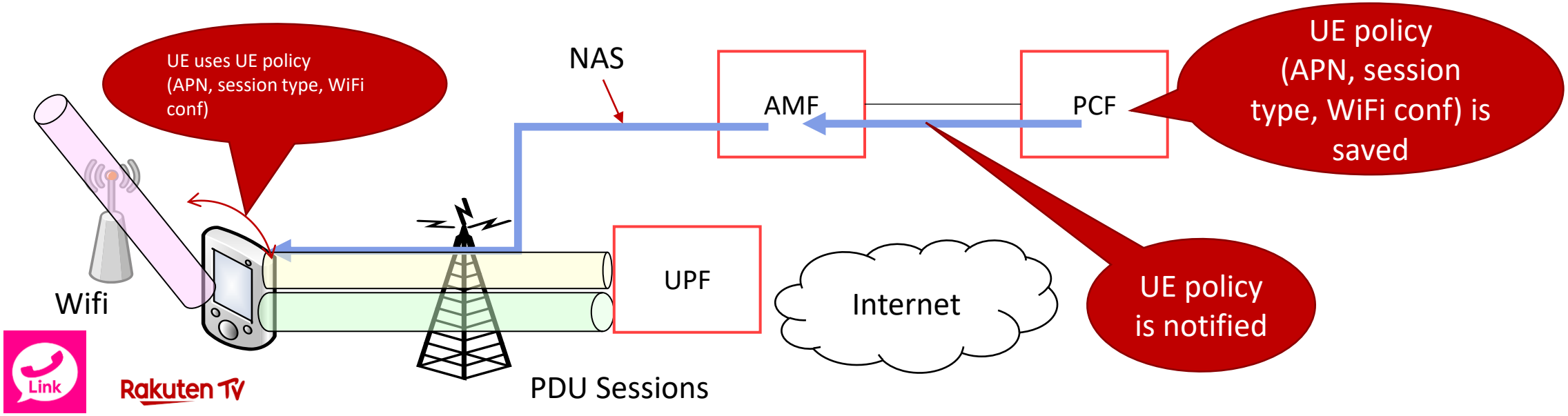

Rakuten Mobile