ZTE views on Rel-18 SA2 study

SP-210636 SA workshop

Emeeting, 9-10 Sep, 2021

Considerations on 5G Advance

- **5G architecture in 5G Advance should be stable as much as possible**
  - The 5G Advance should be kept as stable as possible to facilitate the 5G commercialization in near future. The main focus of 5G Advance should be further evolution and enhancement based on existing architecture to improve the system performance for both eMBB service and non eMBB service
  - There are plenty topics deprioritized from Rel-17. Most of them are expected to come back for Rel-18
- **5G Advance should consider new use cases and new capabilities**
  - 5G-Advanced has its new goals and new capabilities to generate greater social and economic value. Therefore 5G Advance needs to be open to embrace new use cases and new services, such as Sensing network, Passive IoT, etc.
  - 5G Advance starts from Rel-18, and mostly continue at next release. 3GPP should carefully decide the proper release to introduce these new features.

© ZTE All rights reserved

R18 areas with RAN dependency

- SA#93E(Sep) should identify the list of areas with RAN dependency. RAN#93E(Sep) also needs to identify the list of areas with SA dependency
  - The areas which only need alignment between RAN and SA should not be part of the list.
- Coordination between SA#93(E) and RAN#93(E) to identify the potential list of areas.
- Joint decision on final R18 package at SA#94E and RAN#94E

© ZTE All rights reserved

TU estimation

- **Difficulty on estimation of the time unit**
  - Considering if R18 stage 2 starts since Q12021 and is frozen at 2022Q4, the R18 study should be completed at Sep 2022 and normative work is to be completed at Dec 2022.
  - This is the same situation as R17 when we discuss the prioritization at Dec 2019. See discussion in SP-191258.
  - However most likely the 2022 Q1 SA2 will be e-meeting. And some of the e-meeting may be extended to 2 weeks. This causes difficulty to estimate the overall available TUs. It is also difficult to determine the requested TU for each study item because there is no limitation on input papers for each e-meeting.
  - Therefore it is difficulty to use TU as key factor for R18 prioritization

© ZTE All rights reserved

R18 prioritization recommendation

- SA2 should further work on the working tasks, to ensure that each working task is clear and technique correct
  - Moderator email discussion can be organized by SA2 to stabilize the working tasks.

- SA2 should down scope the study to meet the SA2 capacity
  - The overall SA2 capacity in 2020 depends on when to fallback to F2F meeting
  - It is suggest to make decision for Rel-18 as early as possible

- SA#94E can further down scope the objectives in each SA2 study based on RAN coordination input

© ZTE All rights reserved

ZTE views on Rel-18 focus areas in SA2

Existing R17 areas in SA2

1. Vertical enhancement (*)
2. AI enhancement
3. Non 3GPP Access
4. Edge computing (*)
5. Network slicing
6. Multicast and Broadcast (*)
7. Location service (*)
8. Proximity (*)
9. UAV

New areas in SA1

1. XR/VR enhancement (*)
2. Policy enhancement

(*) Dedicated RAN study is needed

© ZTE All rights reserved

XR/VR enhancement area

- Application traffic awareness to support QoS enhancement, e.g. based on Application Data Unit traffic for XR/VR, etc.
- RAN information exposure to application
- Further enhancement on mobility management to support AR/VR/XR traffic, e.g. DRX, dual connectivity

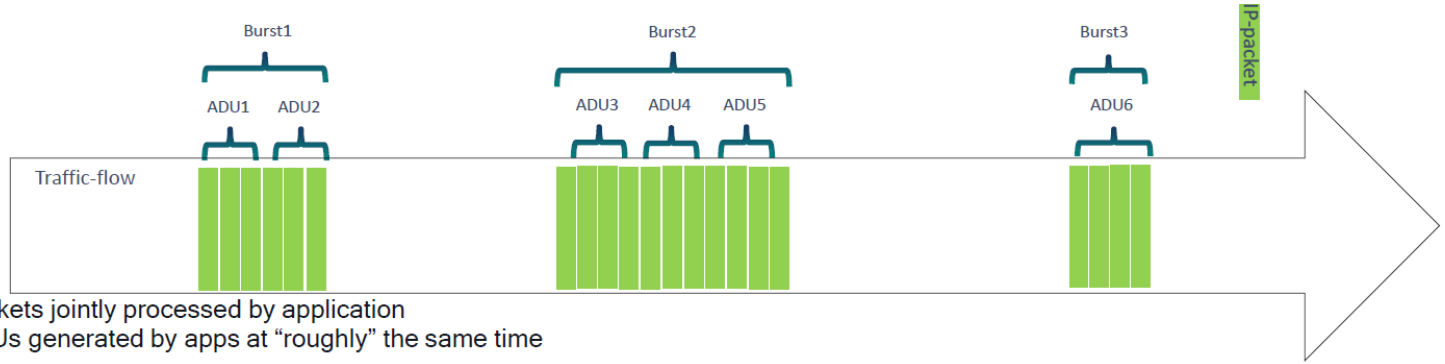

ADU: Set of packets jointly processed by application
Burst: Set of ADUs generated by apps at “roughly” the same time

© ZTE All rights reserved

AI enhancement area

- Data and analytics exchange in roaming case
- UPF data report for analytics based on service based interface
- Vertical Federated learning in 5GC

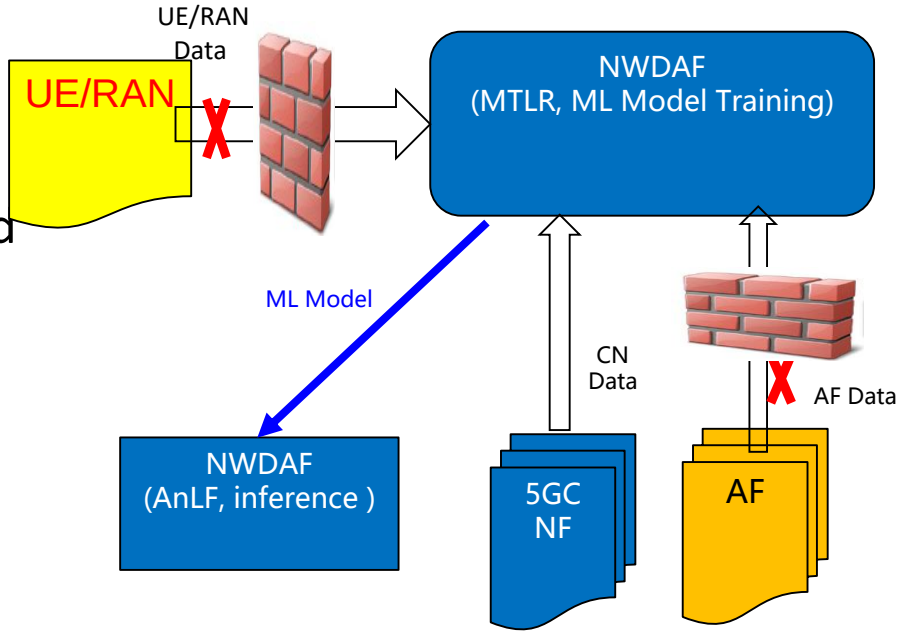

© ZTE All rights reserved

Vertical enhancement area

- NPN enhancement
  - Mobility between Equivalent SNPNs
  - On-boarding enhancement
  - New SA1 PALS requirements
- TSC enhancement
  - Timing Resiliency enhancement
  - Support of DETNET
  - AF request redundancy within the 3GPP network
- 5G LAN enhancement
  - VN communication enhancement(cross SMF, VxLAN, preventing loop, etc.)
  - Group management enhancement(new group attributes, group monitoring, group exposure, etc.)

© ZTE All rights reserved

Non 3GPP access area

- FS_ATSSS_Ph3
  - How to support an MA PDU Session using a Branching Point or UL Classifier
- FS_e5WWC
  - Heterogeneous wireline access MTUs
  - Device behind 5G-RG(QoS and charging)

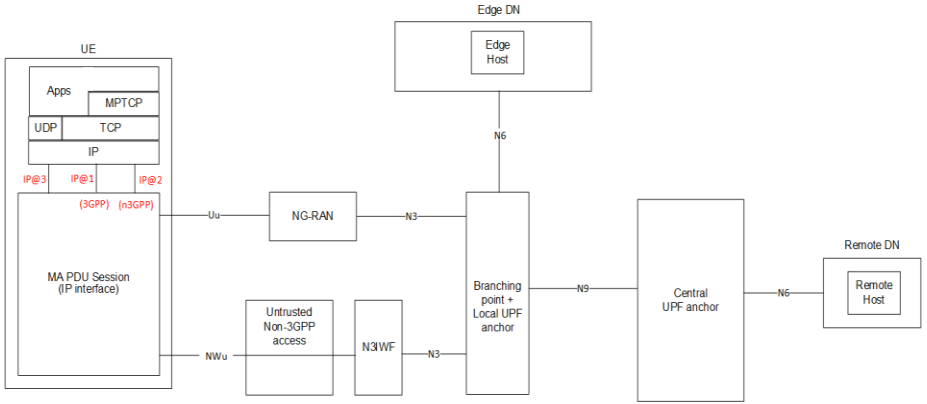

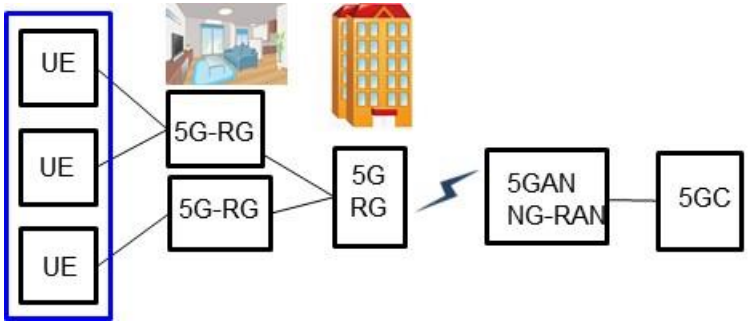

© ZTE All rights reserved

Network slicing area

- Support service continuity of a PDU session when the network slicing of the PDU session cannot serve the PDU session anymore

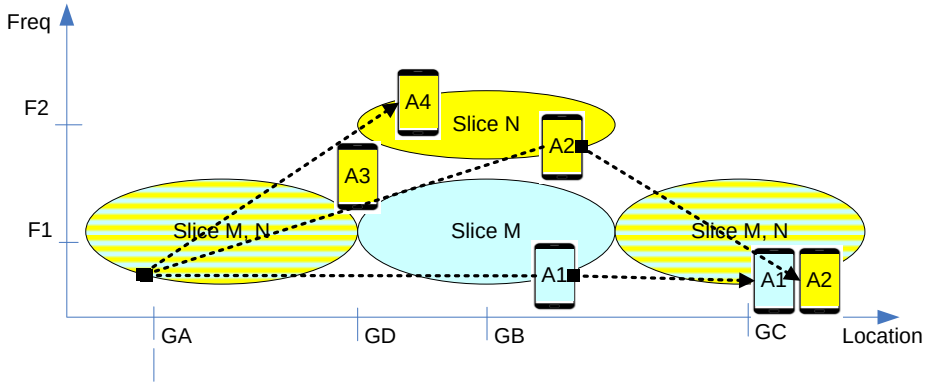

- Steer the UE to the one VPLMN when a UE is roaming in order to use the network slice

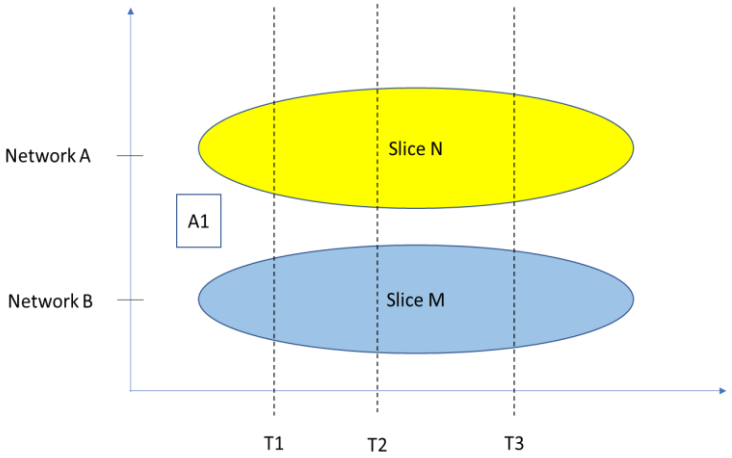

© ZTE All rights reserved

Edge Computing area

Dynamic group management

- Define offload policies for diverse collections of UE(s) i.e. diverse categories of Users, of user subscriptions and of applications.
- Influence PSA-UPF and EAS (re)location for collection of UEs in scenarios when UE(s) should use the same Edge Application Server and are not members of a pre-defined group

- Radio Network information exposure
  - Other information exposure from UPF

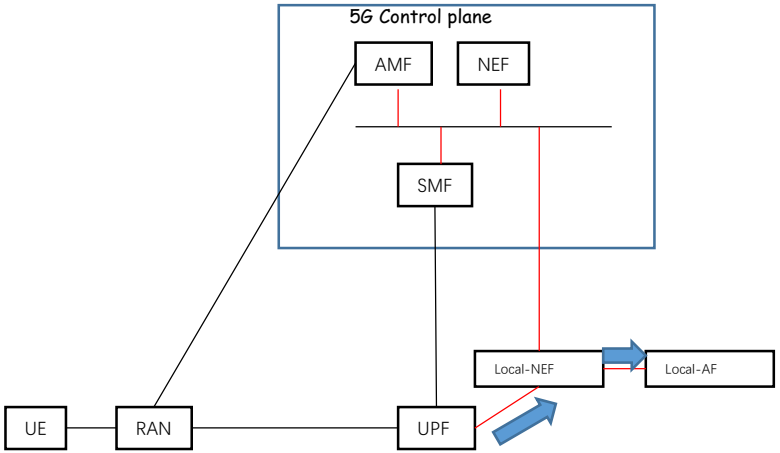

© ZTE All rights reserved

Proximity

- Path Switching support
- MBS traffic to Remote UE by Layer-3 and Layer-2 UE-to-Network Relay
- Support of one NR PC5 hop and multiple NR PC5 hops of Layer-3 and Layer-2 UE-to-UE Relay

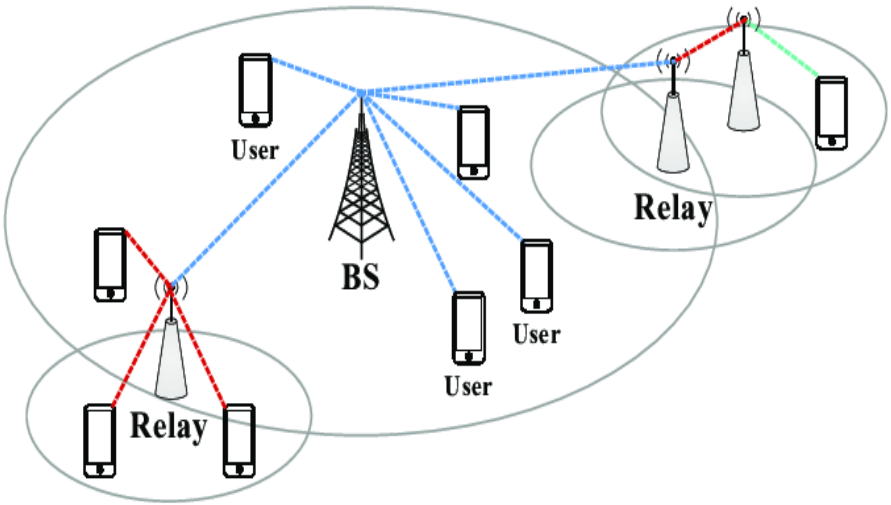

© ZTE All rights reserved

Location service

- Investigates the potential enhancement to location service in edge computing scenarios, e.g. reduce location service latency, and location estimate exposure

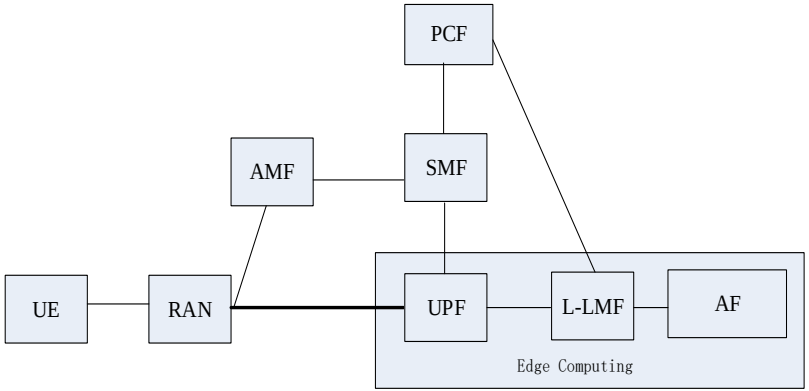

- Ranging (Relative positioning between 2 UEs)

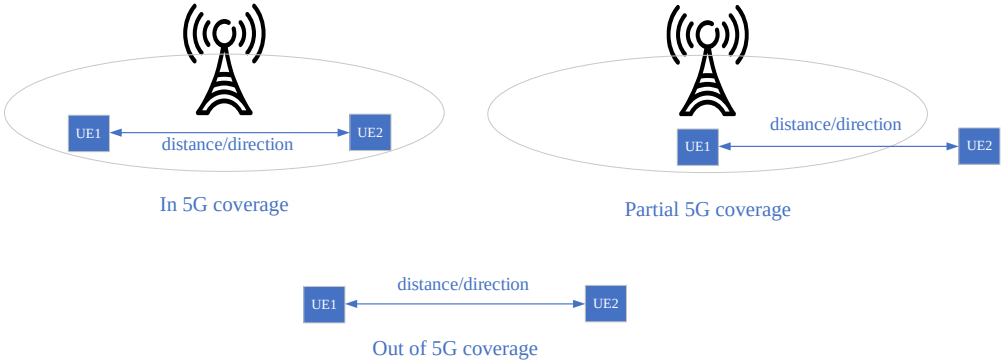

© ZTE All rights reserved

Multicast and Broadcast area

- Multicast MBS Session data in RRC states different from RRC_CONNECTED
- Support of receive only devices and devices with no subscription or with 3rd party content provider subscription only
- Support MBS session in deployment topologies with specific SMF Service Areas (ETSUN).

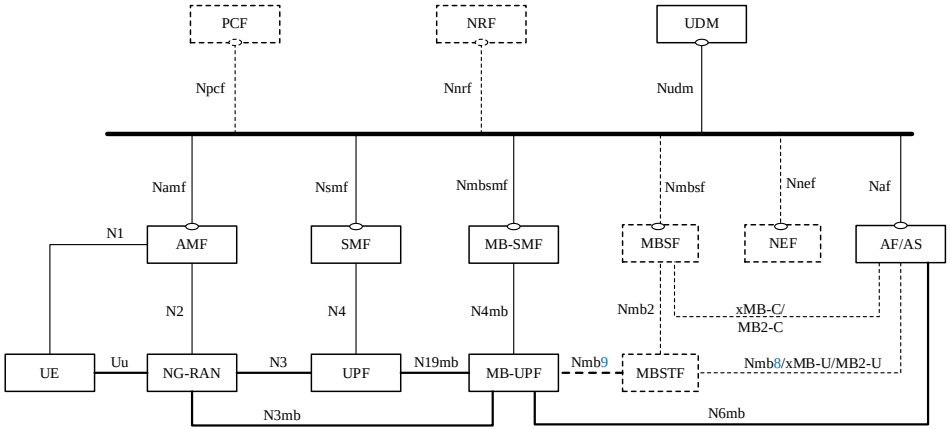

© ZTE All rights reserved

Policy enhancement

- UE policy enhancement
  - UE policy verification

AM policy enhancement

- DCAMP enhancement(Conflict requirements from multiple AFs, home routed roaming PDU session support)

© ZTE All rights reserved

UAV enhancement

- Support transporting Broadcast Remote Identification and Detect And Avoid (DAA) protocols and via PC5;
- Support of simultaneous connectivity to multiple PLMNs leveraging existing 3GPP solutions;
- Support of service differentiation and prioritization for different UAV/UAM categories and mission types.

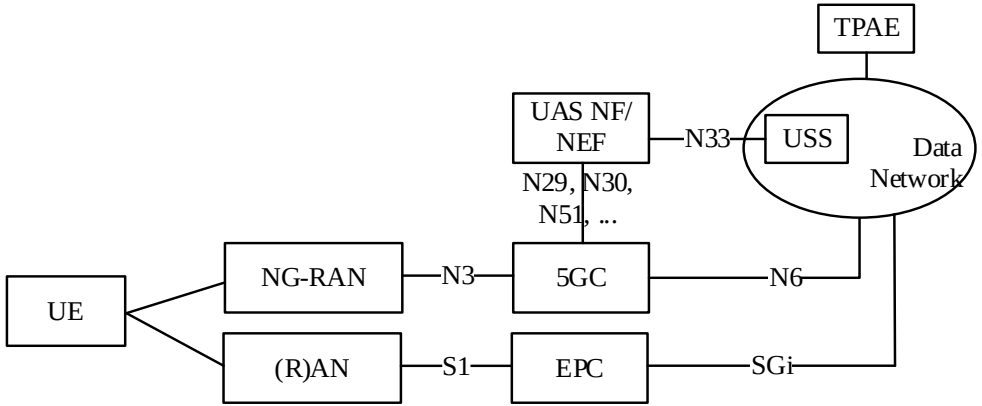

© ZTE All rights reserved

Rel-18 Timeline proposal(18 months)

None▲

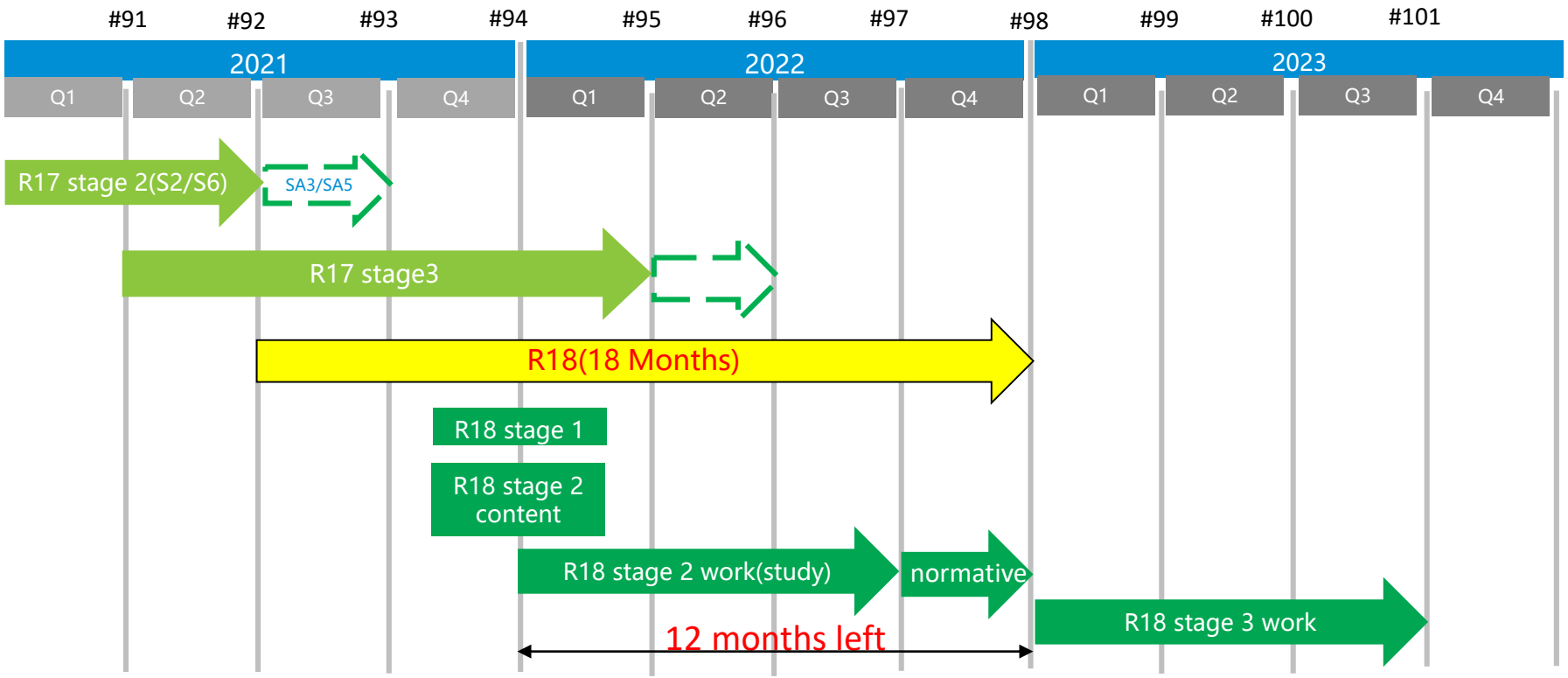

© ZTE All rights reserved

Thanks

5G 先锋