3GPP SA Rel-18 Workshop
Sep 9th –Sep 10th, 2021

SP-210628

Agenda Item	:	3 – Presentations from companies on Rel.18 views
Source	:	InterDigital Inc.
Title	:	InterDigital's Views on Rel-18 Scope for SA
Document for	:	Discussion and Decision

© 2021 InterDigital, Inc. All Rights Reserved.
interdigital

5G Advanced-Rel.18 SA considerations

Strike the right balance between enhancements and new requirements

- Further enhancements to current features e.g., 5G ProSe, eNS, UAV, EC and eNA are expected
- New requirements with focus on further vertical integration, new 5G use cases and automation, e.g., XR/Media services, Personal IoT and Residential Networks

Rationalization of Rel.18 SID proposals, addressing similar requirements

- Merging of proposals addressing similar requirements strongly encouraged
- Consensus-based SIDs/WIDs selection, giving proper weight to enhancements and new functionality, e.g., enhancements to existing features do not automatically have priority over new features

5G Advanced vs 5G-enhanced

- System support addressing new requirements from **Verticals beyond the "Edge"**
  - Including: XR/Multimodality communication, Access to Localized Services, Personal IoT/Residential Networks, and Sensing
- System enhancements addressing existing **requirements not-yet fulfilled**
  - Including: E.g., 5G ProSe, eNS, eNPN, UAV/UAM, eNA, EC

[back]

Confidential and Proprietary
© 2021 InterDigital, Inc. All Rights Reserved

Striking a balanced Rel.18 System

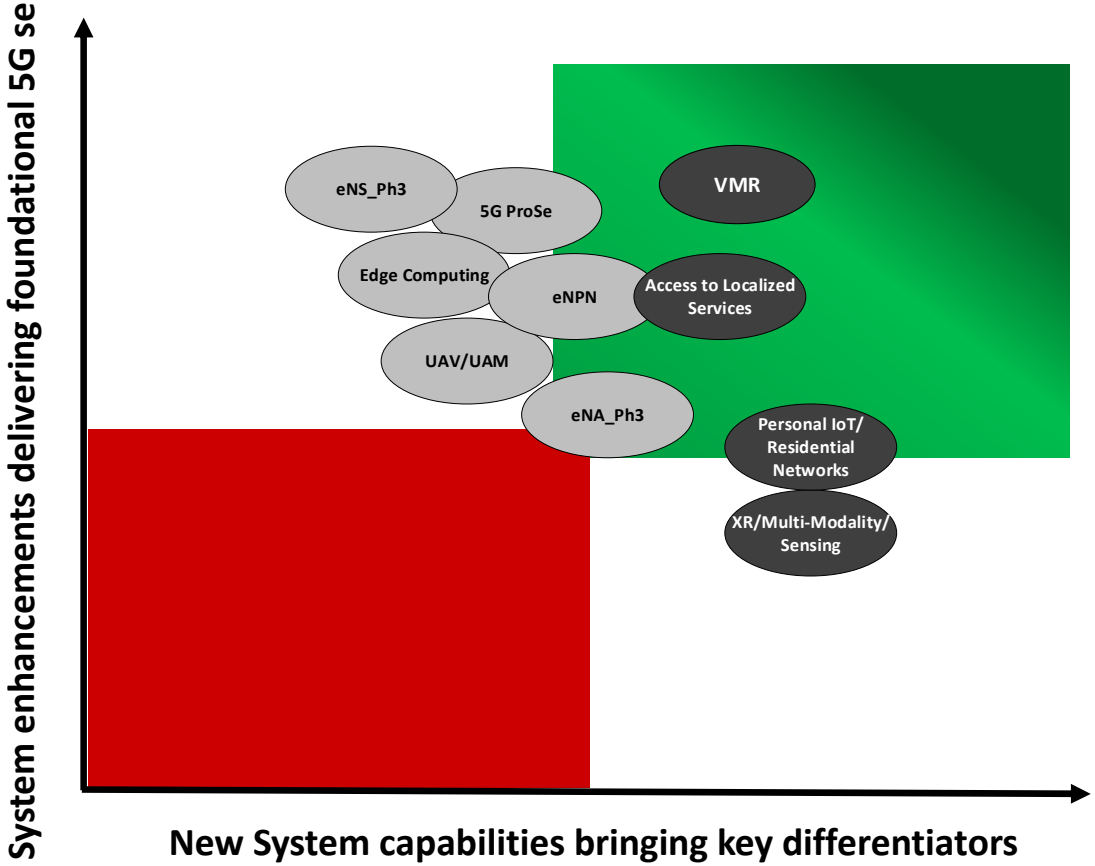

Rel.18 signals the beginning of "*5G-Advanced*"

- Enhancements to existing features ensure a strong foundational system that can delivered new features/capabilities
- However, *5G Advanced* must significantly provide new capabilities, allowing differentiation against previous releases

Considerations to ensure a "right" balance

- Strict evaluation of what constitute a key enhancement
  - Can the relevant feature still work without it? Is this just an optimization "nice to have" or is it addressing a critical need?
  - Is the enhancement required to support new capabilities?
- Is "this" new feature of commercial interest
  - Is there a clear requirement for it?
  - Can it be handled as an enhancement of an existing feature?
  - Is standardization clearly required? E.g., It cannot be delivered based on existing Standards

Confidential and Proprietary
© 2021 InterDigital, Inc. All Rights Reserved
interdigital

Pre-SA Rel.18 WS outlook

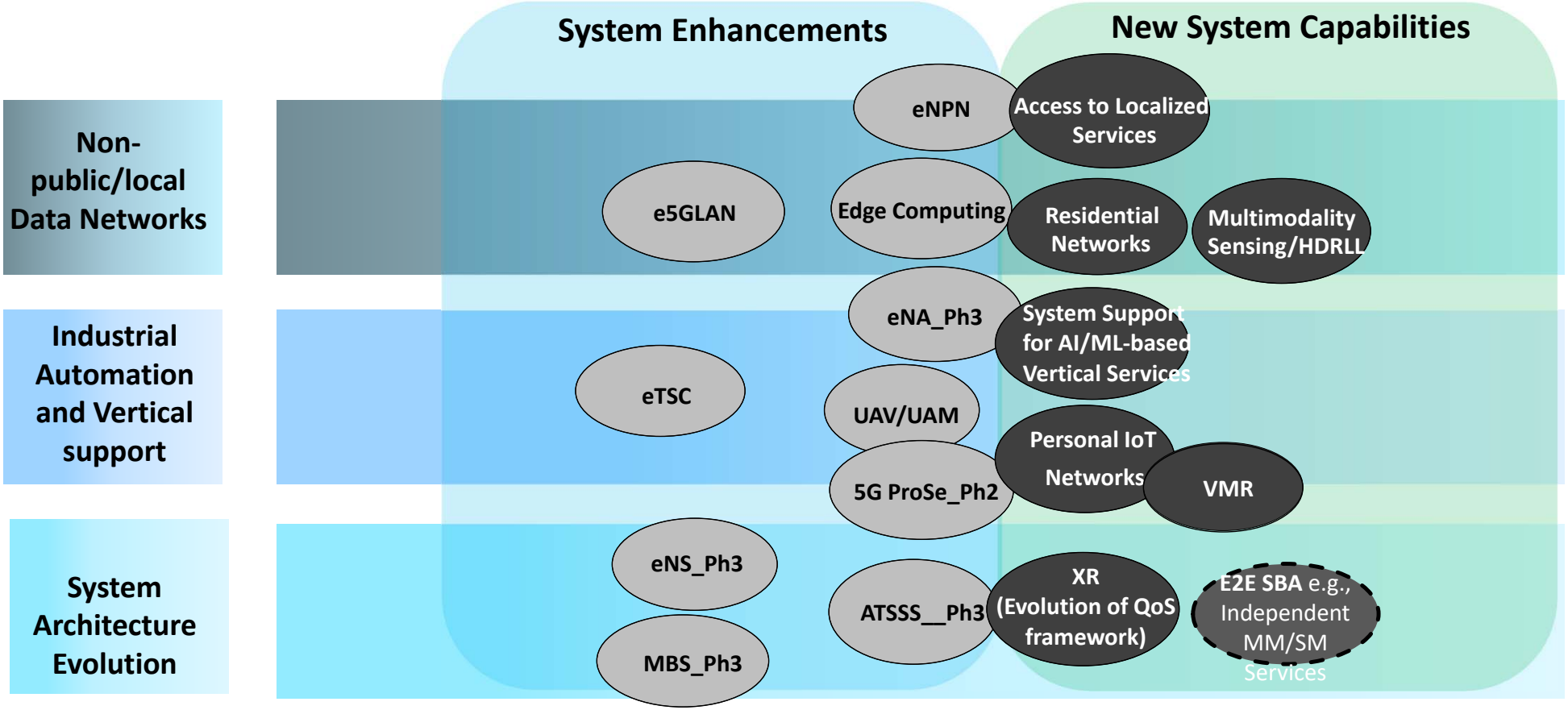

Confidential and Proprietary
© 2021 InterDigital, Inc. All Rights Reserved

XR/Multimodality Communications

Justification

- XR/Multimodality constitute an essential components of increasingly popular telepresence and gaming applications
- Existing QoS models may not be optimal when addressing high end media services

Objective

- Study possible system enhancements to enable multimodality services (e.g., tactile, video and audio)
- Study possible enhancements to the current QoS framework to improve user's QoE considering particular characteristics of media services, e.g., High Rate Low Latency)

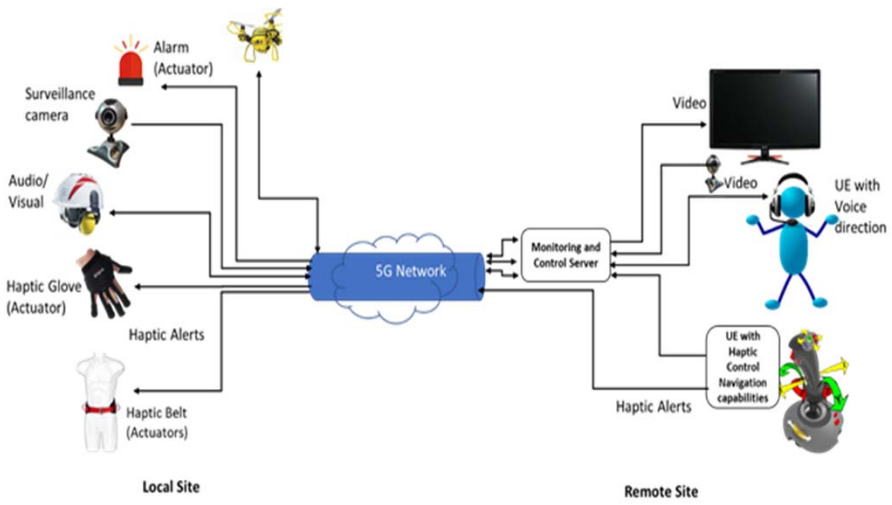

Example of a personal exclusion zone
Source SA1 22.847

System support for AI/ML-based Vertical services

Justification

- 5GS can provide an efficient way to handle application layer AI/ML data traffic
- Existing NWDAF handle AI/ML traffic distribution confined within the Core Network; therefore, enhancements are required to support model transfer, from client applications running at the UE

Objective

- Study possible system enhancements to support model transfer from applications running at the UE
- Study system considerations to enable transfer of AI/ML data while supporting regular User Traffic

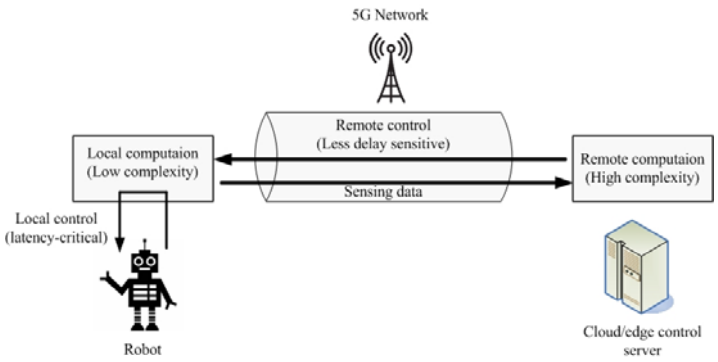

Split control of legged robot over 5G NW
Source SA1 22.874

Non-Public Networks and Localized Services

Justification

- Complete outstanding KI, e.g., providing SNPN support to non-3GPP access and equivalent SNPNs and service continuity across SNPNs
- Address new use cases and satisfy new requirements to enable NPN to offer access to localized services

Objective

- Study possible enhancements to enable mobility across SNPN and non-3GPP access to SNPN
- Study whether and how NPN can provide access to localized services
- Study whether and how (S)NPN providing localized services, e.g., at specific time and location, can interact with "enhancing features" such as 5G Proximity Services, Edge Computing and 5G LAN

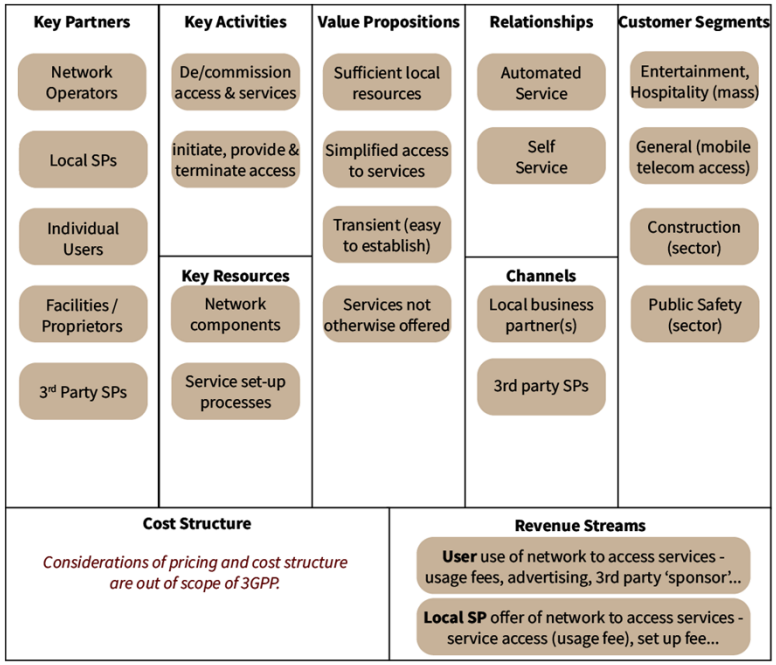

A Business Model Canvas for PALS
Source SA1 22.844

Proximity Services - 5GProSe, VMR and UAV/UAM

Justification

- Fulfill outstanding KI, e.g., path switch between Uu and PC5, UE-to-UE relay, and 5MBS traffic over UE-to-Network Relay
- Address new requirements/use cases, e.g., non-3GPP access over PC5, multiple hop relay and whether and how these requirements interact with requirements by VMR
- Increase operator's "value add" options, by enabling IoT devices to access the 5GS via 3GPP or non-3GPP access. E.g., within a user configured network, with 5GS assistance

Objective

- Study possible enhancements to support service continuity when switching between NR Uu and PC5, both direct and indirect paths, and to support 5MBS traffic to Remote UE
- Study possible interaction between 5G Prose and VMR and possible joint enhancements between 5GProse and UAS/UAM
- Further enhancements to relay solution e.g UE to UE relays, Multihop relays and relay mobility (both L2 and L3)
- Study whether and how the 5GS can support "PIN Element with gateway/relay capabilities acting as UE or an eRG and possible interactions with 5GProSe/UAV/UAM

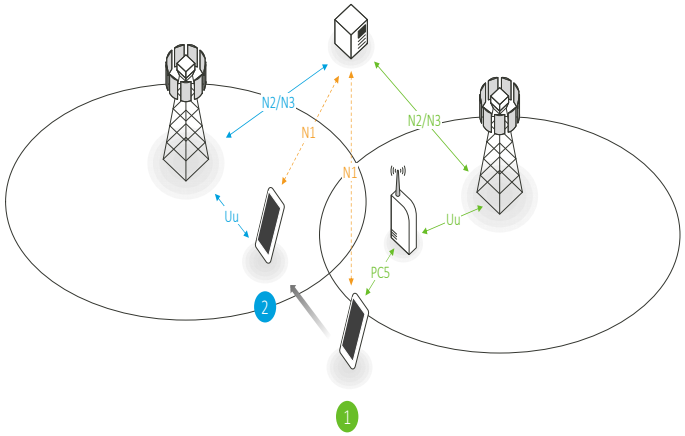

Inter-NGRAN mobility
Source SA2 23.752