3GPP SA Rel.18 Workshop
9-10 September 2021

SP-210621

Qualcomm

Priorities for SA4 Rel-18

Source: Qualcomm

SA4

QC Guiding Principles for Rel-18 Standardization Priorities

- Has identified commercialization interests
- Non-vertical framework for app integration & service collaboration
- Leverage deployed multimedia technologies
- Support for implementation and deployment (tools, reference s/w, interop,…)

5G Media Service Enablers (5G-MSE)

Bundling components into valuable features and simplifying the access

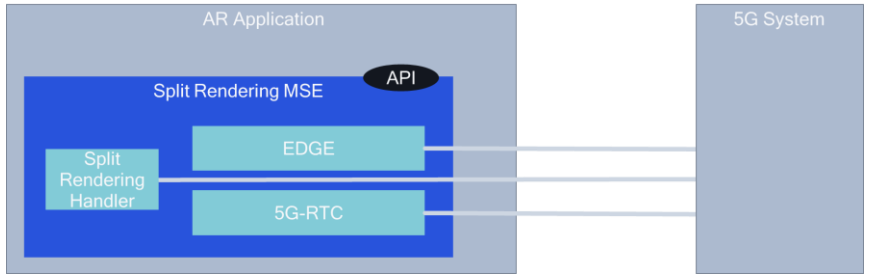

Definition

- Similar to an SDK with APIs
- A set of functions that may be used to develop applications integrated with 5G Systems
- A set of robust functionalities which reduce the complexity of developing 5G-optimized applications
- Leverages cross-layer system + radio optimizations/ features developed in SA2 & RAN
- Provides APIs to simplify and enable access to these functionalities
- Leverages network interfaces to connect to the 5G System

Potential Examples

- Conversational communication
  - 5G-RTC Stack Receiver + Sender
  - 2D codecs up 2k
- Raster-based Split Rendering
  - 5G-RTC Stack Receiver
  - 2D codecs up to 8k
  - Audio functionalities
  - Edge
  - QoS Framework
- Vector-based Split Rendering
  - Builds on raster-based split rendering
  - Add 3D media formats, transport, QoS
- AR Split Compute
- Real-time Cloud Gaming
- XR Library
- AI/ML Components

3GPP Conversational Services

Based on traditional vertical MTSI service model

3GPP TS 26.114 includes the following components in a single service specification based on SIP/IMS

- Session Setup and Control
- QoS and 5G Integration
- Content Delivery and Media
- End Points
  - speakers/displays/cameras/microphones

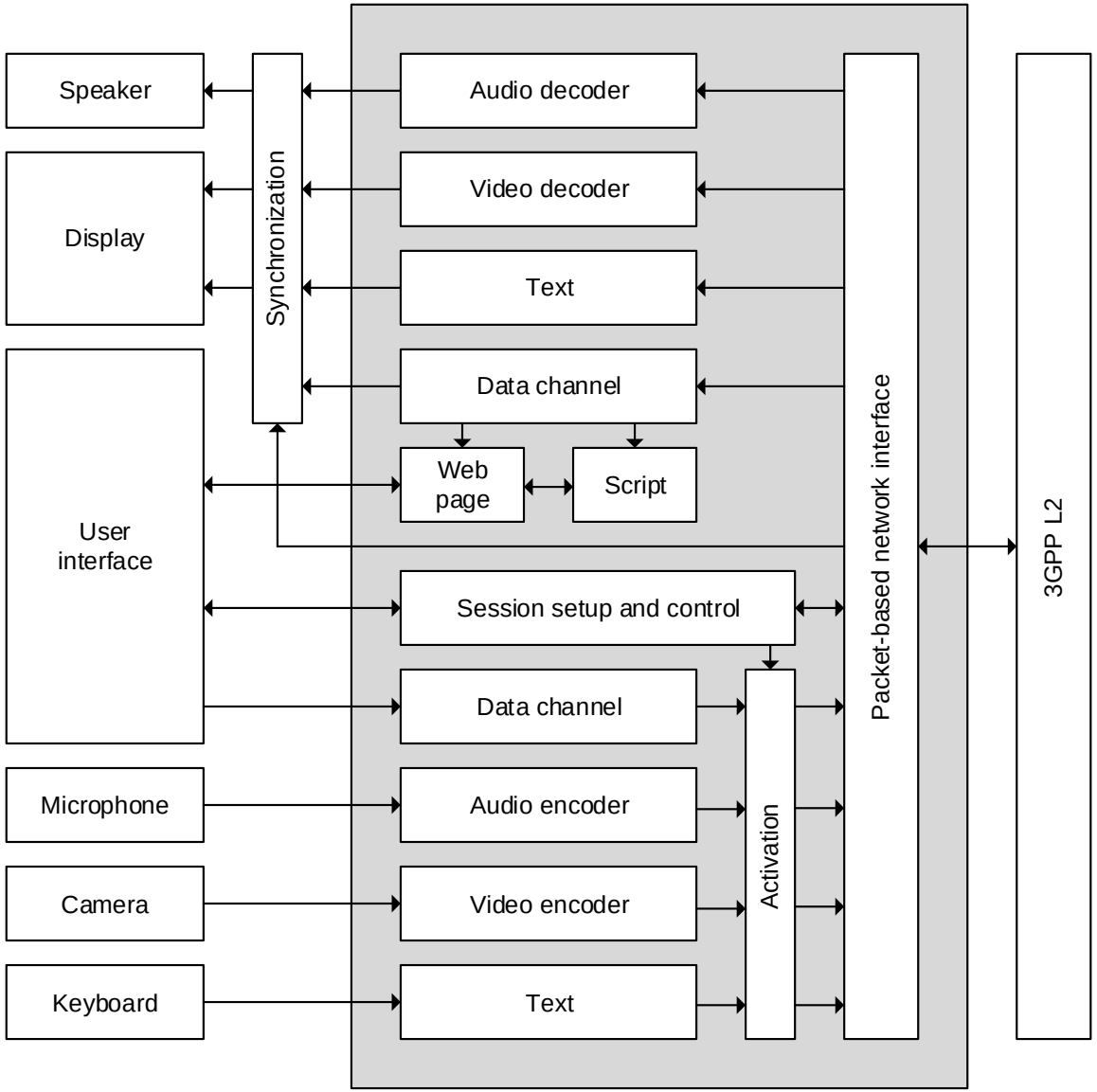

Decompose and evolve to support apps with modular 5G-RTC model

5G Real-time Communication (5G-RTC)

Based on ITT4RT, FS_5GSTAR, Split Rendering, etc.

- Integration of third-party services/apps
  - More components and specs are needed
  - Similar to the approach done for 5G Media Streaming
- Session Setup and Control
  - SIP-based (TS 26.114)
  - *App-based (webRTC model)*
- QoS and 5G Integration
  - SIP/IMS-based (TS 26.114)
  - *App/service-based (webRTC and 5GMS model)*
- Content Delivery and Media
  - RTP/RTCP-based + Control (26.114 + *webRTC*)
  - Codecs: TS 26.114 and TS 26.511 + *additional media*
- End Points
  - Direct output/input (speakers/displays/cameras/microphones)
  - *XR Rendering: scene rendering, e.g. glTF + MPEG-I SD*
  - *XR Runtimes: pose, trackers, and sensors, e.g. OpenXR*

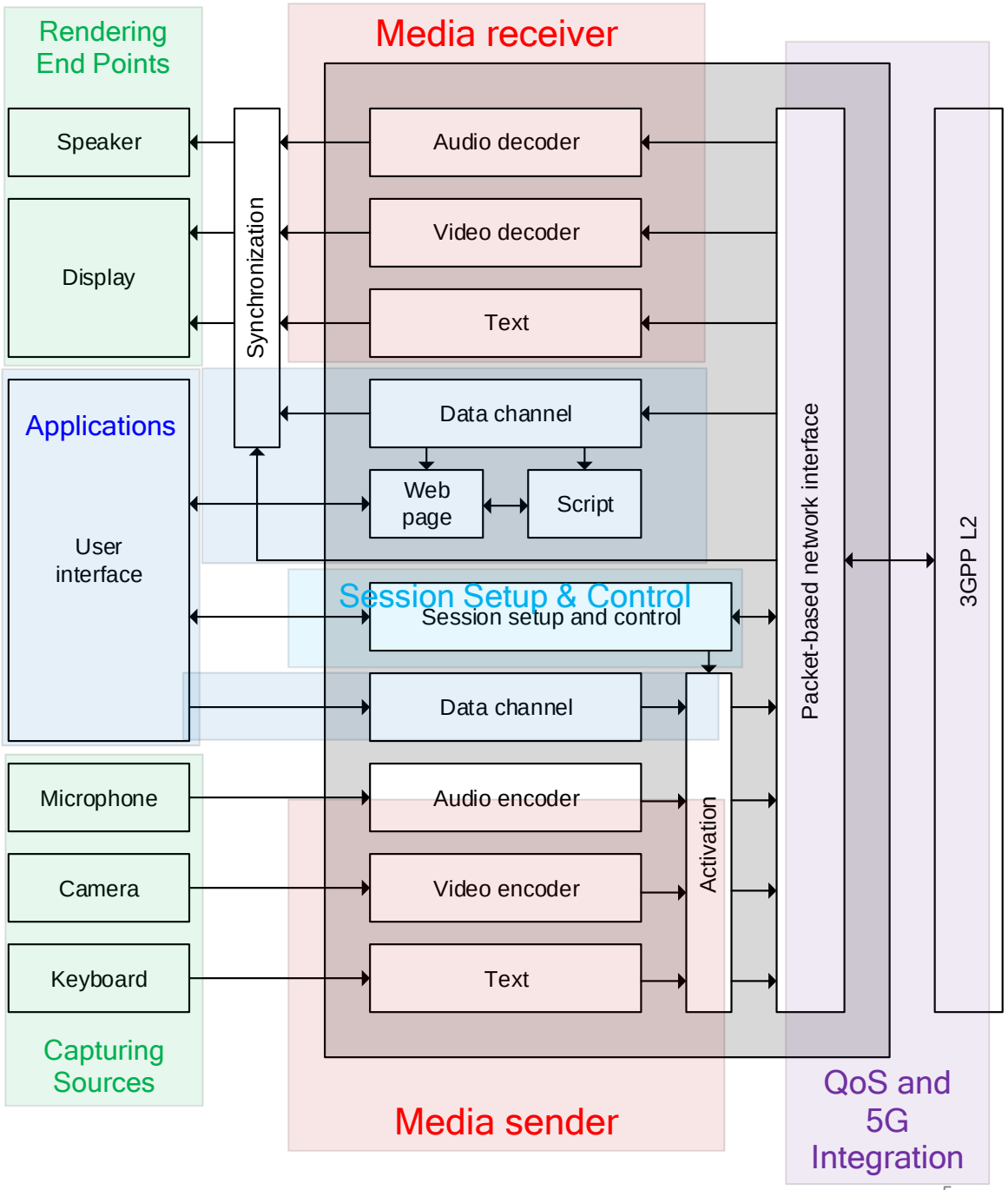

Italicized: new component to be specified

Example: Split-Rendering Stage 3

Based on FS_EMSA recommendations, 5GMS_EDGE, and FS_XRTraffic
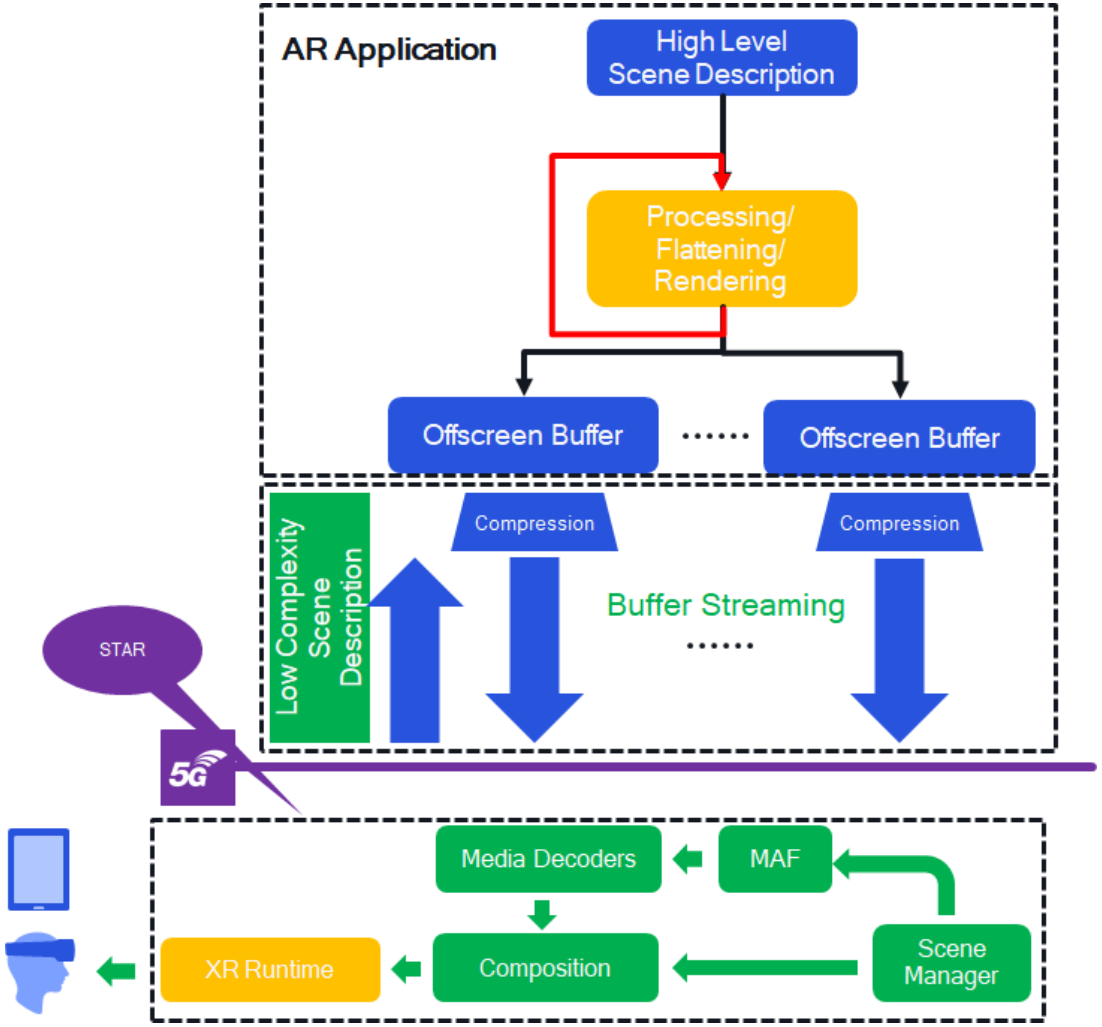
- Background/Justification
  - Rendering is quite complex, especially for advanced applications such as gaming and AR
  - 5G offers new capabilities such as low latency and edge processing
  - Enable UE to share rendering with the edge for superior user experience
- Draft Objectives
  - Re-use of 5G-RTC components
    - Media formats and codecs for split rendering
    - Control and transport protocols for split rendering
  - Integrate split rendering in the 5GMS architecture
  - Define split rendering context and context relocation