3GPP TSG-RAN WG4 Meeting #66 **R4-130034**
Malta, January 28th – February 1st, 2013

Title:	Preliminary Results on Absolute Data Throughput Framework
Source:	Motorola Mobility, Spirent
Agenda Item:	6.14
Work Item:	Verification of radiated multi-antenna reception performance of UEs in LTE/UMTS
Release:	11
Document for:	Discussion
Abstract:	This contribution presents preliminary results on Absolute Data Throughput, based on 2x2 MIMO reference antennas

Introduction

The Absolute Data Throughput is the MIMO test methodology which emulates a conducted scattered environment, predicting the radiated performance of any DUT while connected to the MIMO reference antennas [1].

While the reference antennas define a known radiated performance of the DUT, any measurement campaign of this complexity must start from well defined baseline measurements among participant labs. Initially a simulation campaign was proposed to define such baseline. Soon this approach was refused due intellectual property (IP) embedded in each DUT manufacturer's mobile device chipset, therefore disabling any attempt to share realistic DUT dependent LTE MIMO full-link simulation models.

Investigating other technically sound options to establish a baseline measurement, and protect IP from every DUT manufacturer, a specialized conducted measurement was elaborated. This work will provide preliminary measurement results.

In an effort to compare different MIMO OTA methodologies' results to conducted results under the implementations of channel models defined in [2], the absolute data throughput comparison framework has been defined by utilizing the reference antennas and reference mobile devices (LTE capable handsets).

The goal of this concept is to recommend a framework of utilizing absolute radiated data throughput as a method for comparing the radiated throughput results measured in any MIMO OTA testing methodology with conducted reference performance under the ideal channel model implementation. The conducted reference will be used to compare data against. It is not implied that the conducted reference is "ideal" or "perfect." For instance, the way that the pattern data is interpolated and quantized may contribute variations in the conducted reference that are not present in the radiated test.

This methodology will be used to understand each MIMO OTA testing method's ability to emulate the specified network and channel propagation characteristics based on an absolute throughput metric. This comparison framework will be used to understand the ability of different testing methodologies to provide comparable results.

Conducted measurements

The conducted portion of the absolute data throughput baseline evaluates the conducted performance of the DUT while connected to the base station emulator through a dual port channel emulator, as shown in Figure 1 below. The channel emulator is programmed to generate the channel model characteristics (temporal and spatial), identical of the channel emulated in the radiated test environment. Including the DUT complex radiation pattern, i.e. 2x2 MIMO reference antennas.

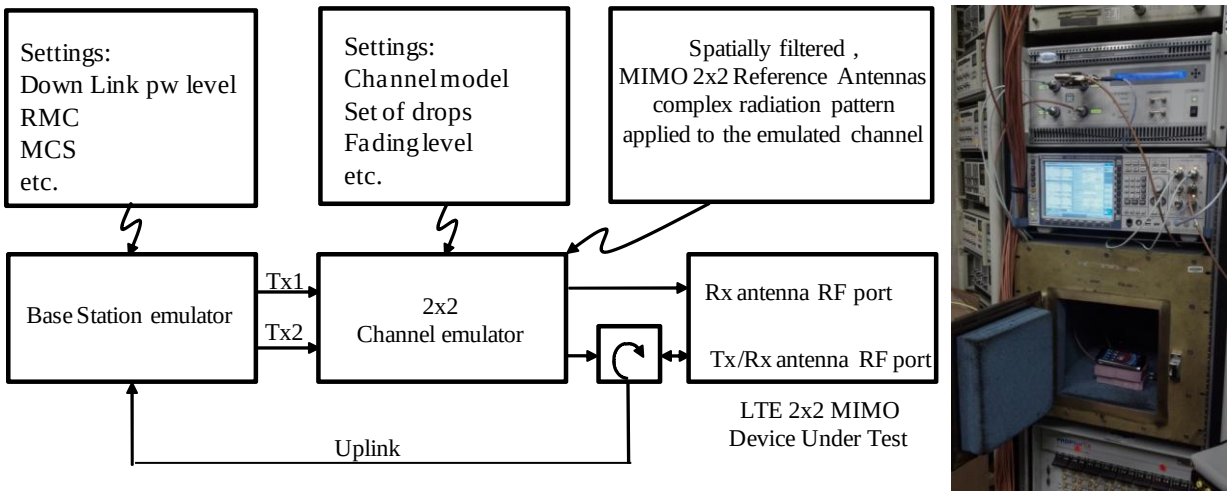

Figure 1: Absolute data Throughput, conducted measurement block diagram, and setup assembly details

The goal of this measurement is to determine a baseline data throughput over downlink conducted sensitivity, while encapsulating the following characteristics:

1. Network characteristics inherent in the base station emulator settings (the reference measurement channel, MCS, etc.); these settings are documented in Section 7.1 of 3GPP TR 37.977;
2. Emulated base station antenna characteristics; these settings have been defined in Section 7.2 of 3GPP TR 37.977;
3. Propagation channel characteristics (channel model, multipath profile, defined drop characterizing spatial and temporal parameters, etc.); these settings have been defined in Section 8.2 of 3GPP TR 37.977;
4. DL signal power level;
5. Complex antenna radiation pattern of the DUT (radiation patterns of CTIA MIMO 2x2 reference antennas are be applied to the emulated propagation channel characteristics);
6. Chipset characteristics (such as the receiver algorithm implementation).

The conducted reference measurement does not encapsulate the following characteristics:

1. Interference/coupling between antenna elements integrated into the UE;
2. Sources of self-interference coupling to the receiver chains via antenna elements integrated into the UE.

Adopting similar measurement setup based on figure 1, preliminary absolute data throughput results were obtained. The figures 3~5 demonstrates data throughput results over “good, bad and nominal” MIMO 2x2 reference antennas, each curve represents the average over elevation fixed to 90°, and 12 azimuth positions (0~330°, with 30° resolution). The complex radiation pattern of MIMO 2X2 reference antennas were uploaded into the two port channel emulator, while playing SCME Umi/Uma, in this work the Base Station antennas were correlated and uncorrelated. These measurements were taken manually loading each respective azimuth position antenna pattern into the channel emulator, then data throughput was measured over 2000 sub-frames at each RS EPRE level from maximum data throughput (100%) to minimum data throughput (approaching 0%), under 1dB resolution.

Emulation of the radiation pattern rotation

For the conducted portion of the absolute data throughput framework, it is necessary to generate the spatially filtered channel impulse response per polarization and then combine to generate the emulated channel impulse response coefficients. The measured antenna pattern shall be interpolated to match the spatial resolution of the angles of arrival of the SCME channel emulator (this value is typically 1 degree). Figure 2 below illustrates an example of this procedure using a simplified antenna pattern and channel PAS.

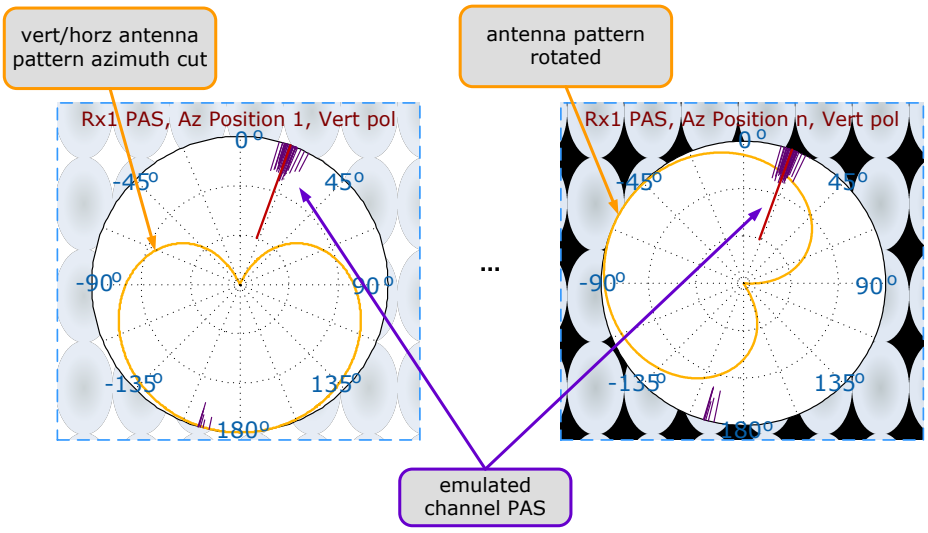

Figure 2: Rotation of antenna pattern over azimuth positions

In general, the emulation of antenna pattern rotation is specific to the channel model. For 2D channel models antenna pattern rotation shall be performed over 360 degrees in 30 degree steps (12 total positions). For other channel models this process is FFS.

This process may be automated with channel emulator control software or performed manually.

The antenna patterns for the Band13: “Good”, “Nominal”, and “Bad” reference antennas are incorporated into a conducted channel model and used to measure the performance of the selected UE device. The horizontal cut (θ=90°) is selected for each antenna pair, and the amplitude and phase response is obtained and offset according to the emulated rotation angle. The appropriate SCME UMa or UMi channel model is utilized and each cluster is evaluated for its quantized interpolated amplitude and phase vector. This information is used to create the fading components, and calculate the power levels associated with each cluster, and effectively the channel model observed on each antenna.
Since the patterns are different on each antenna, the total power observed may be different leading to branch imbalance. It is observed that the branch imbalance tends to be sinusoidal as the rotation angle shifts the view to the channel model.

Correlation is observed due to the angle of arrival and the phase response from the antenna pattern, for the arriving clusters. The gain response of the antennas, for both E(θ) and E(φ) and the phase of each influences the resulting correlation, which is observed to vary.

Each rotation angle is saved as a separate model and evaluated for throughput via changing the signal level delivered to the device under test.

Absolute Data Throughput Measurement Enabler

The fundamental enabler for the adoption of the Absolute Data Throughput metric is the ability to apply the complex radiation pattern to the channel for the conducted portion of the test. Such conducted measurements can be performed manually; however, without an application (SW) to rotate the loaded antenna complex radiation pattern, the measurement may become very time consuming and prone to human errors. Automation of this process is highly recommended

Output Data

A unified data format for recording the conducted test results is presented in Table2 below.

Table 2: Conducted measured data table format

Absolute data throughput: conducted measured data				
ID	Moto abs TP 011813			
Lab	Motorola Mobility			
Date	01/18/2013			
Methodology	Absolute Data Throughput, conducted			
eNodeB emul.	R&S CMW500			
eNodeB emul. ver	Installed SW V 3.0.10			
eNodeB ant config	Sec 7.2 in 37.977			
eNodeB PHY config	Sec 7.1 in 37.977			
Band	13			
DL channel	5230			
UL channel	23230			
RMC	R11			
Num subframes per SNR pt	2000			
Channel emul.	Spirent SR5500			
Channel emul. ver	03.51.01			
Channel model config	Sec 8.2 in 37.977			
Channel model	SCME Umi, Uma			
Emul. veh. speed	30 km/h			
Ant1 pattern	Provided by Satimo			
Ant2 pattern	Provided by Satimo			
UE mfg	Motorola Mobility			
UE model	Droid 4			
UE ID	IMEI:99000052951579			
Transmission Mode	TM3			
Max theoretical throughput	23.33 Mb/s			
Num theta pos.	Sec 9.3.1.3 in 37.977			
Theta pos.	Sec 9.3.1.3 in 37.977			
Num phi pos.	Sec 9.3.1.3 in 37.977			
Phi pos.	Sec 9.3.1.3 in 37.977			
Test plan version	Motorola 011813			
Comments	Spirent SR5500 TestKit SW used			

Conducted measurements results

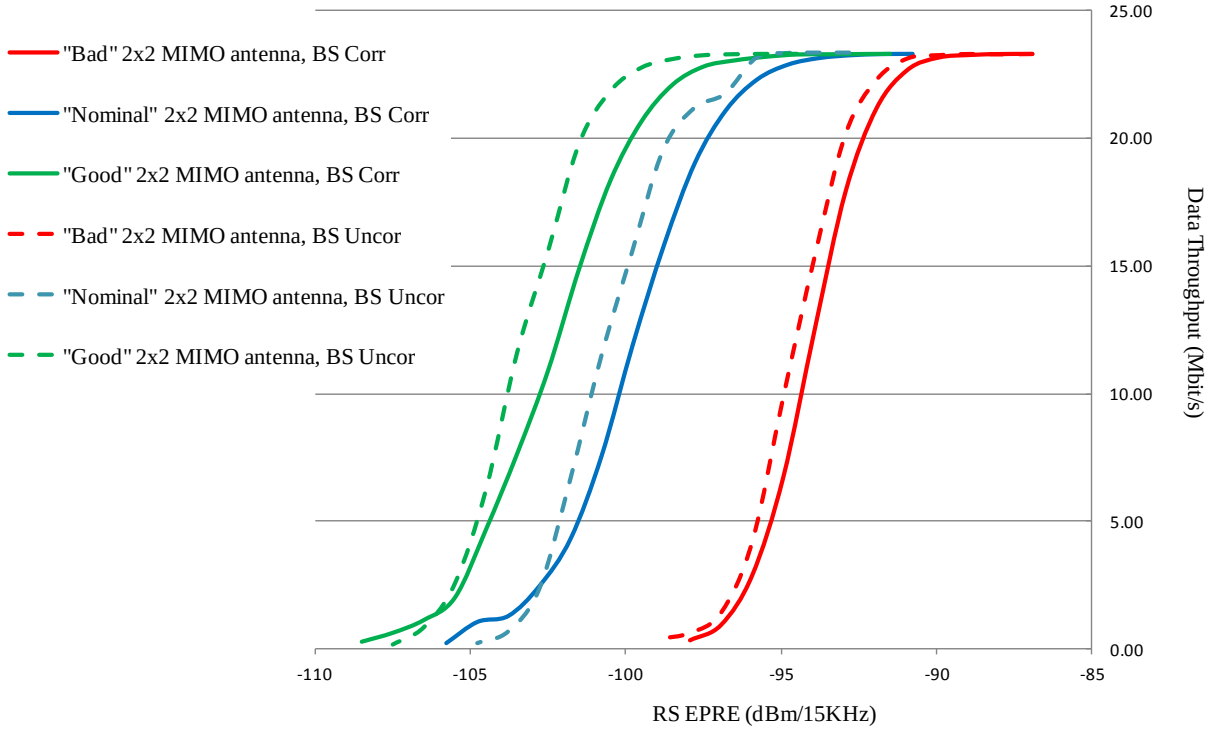

Figure 3: Band 13, SCME Umi, 16 QAM, Base Station antennas correlation comparison

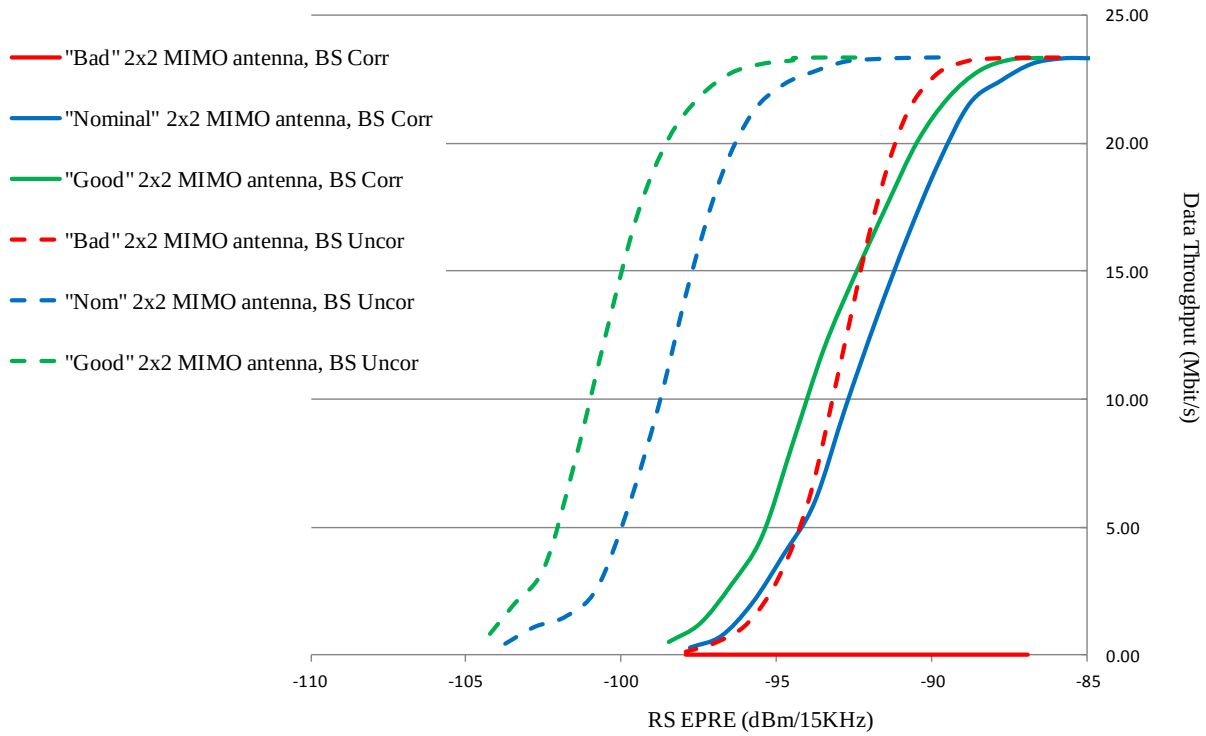

Figure 4: Band 13, SCME Uma, 16 QAM, Base Station antennas correlation comparison

The following dataset includes a modified (MOD) version of SCME Uma, where all Angle of Departure (AoD) were subtracted by 15º:

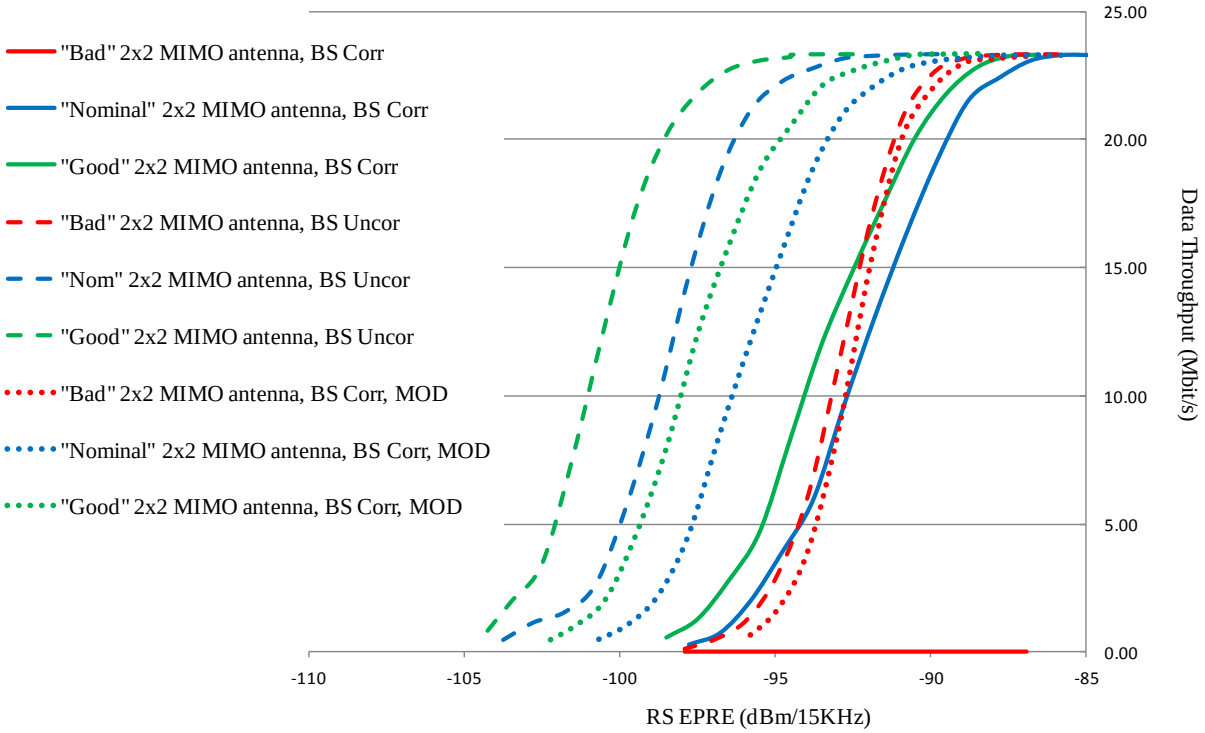

Figure 5: Band 13, SCME Uma, 16 QAM, Base Station antennas correlation comparison

Conclusion

As demonstrated, the absolute radiated data throughput method can accurately determine the DUT radiated performance baseline emulating the network, channel characteristics defined in the MIMO OTA performance specification and DUT complex radiation pattern, eventually it would provide a direction towards acceptance of valid MIMO OTA test method(s).

The performance discrimination between MIMO reference antennas measurement results presented in this paper agree with previous studies.

While SCME Umi doesn't present strong limitations under correlated Base Station antennas, SCME Uma shows correlation near 95%, presenting a challenge test environment mainly when evaluated with "bad" MIMO reference antenna.

A modification proposal on SCME Uma was presented, where 15º subtractions were applied to all Angle of Departure (AoD). Preliminary results demonstrated that such modification reduces the correlation down to 75%, enabling the characterization of all three MIMO reference antennas, and more appropriate discrimination among them.

References

[1] I. Szini, G. Pedersen, A. Scannavini, and L. Foged, "MIMO 2x2 Reference antennas concept," in Antennas and Propagation (EUCAP), 2012 6th European Conference on, march 2012, pp. 1540 –1543.

[2] "Verification of radiated multi-antenna reception performance of User Equipment (UE)", 3GPP TR 37.977 v0.3.0