3GPP TSG RAN WG2 LTE ad-hoc
20-21 June 2005
Sophia Antipolis, France

Tdoc R2-051734

Agenda item: 3.2

Long-Term Evolution of Radio Link Layer

Source: Nokia

Document for Discussion and Decision

Contents

- Discontinuous Reception and Paging
- RRC States
- Transport channels
- Proposed modifications to RRC
  - Complexity of extending current protocols
- Future of RLC
- Changes to MAC
- PDCP functions
  - Control-plane IP connectivity
- Radio Protocol Stacks for EUTRA
- Summary of proposed key changes

NOKIA

Discontinuous Reception and Paging

- WCDMA FACH has no DRX capability
  - => Cell_PCH is needed to save power for terminals on common channels
  - => Terminals, whose location cell is known, need to be paged prior to starting transmission
- WHAT IF:
- DRX capability would be built on downlink shared channel instead
  - => Active terminals can utilize DRX based on their active services delay requirements
  - => Not-active terminals, whose location cell is known, don't need to be paged (DL traffic can start directly, as long as DRX is respected)
  - => Paging messages can be sent on downlink shared channel
- Consequently, no FACH is needed either, and downlink resource can be handled as a common shared channel pool
- Compared to WCDMA, similar functionality for PS services can be achieved with reduced complexity

Reduced Number of RRC States

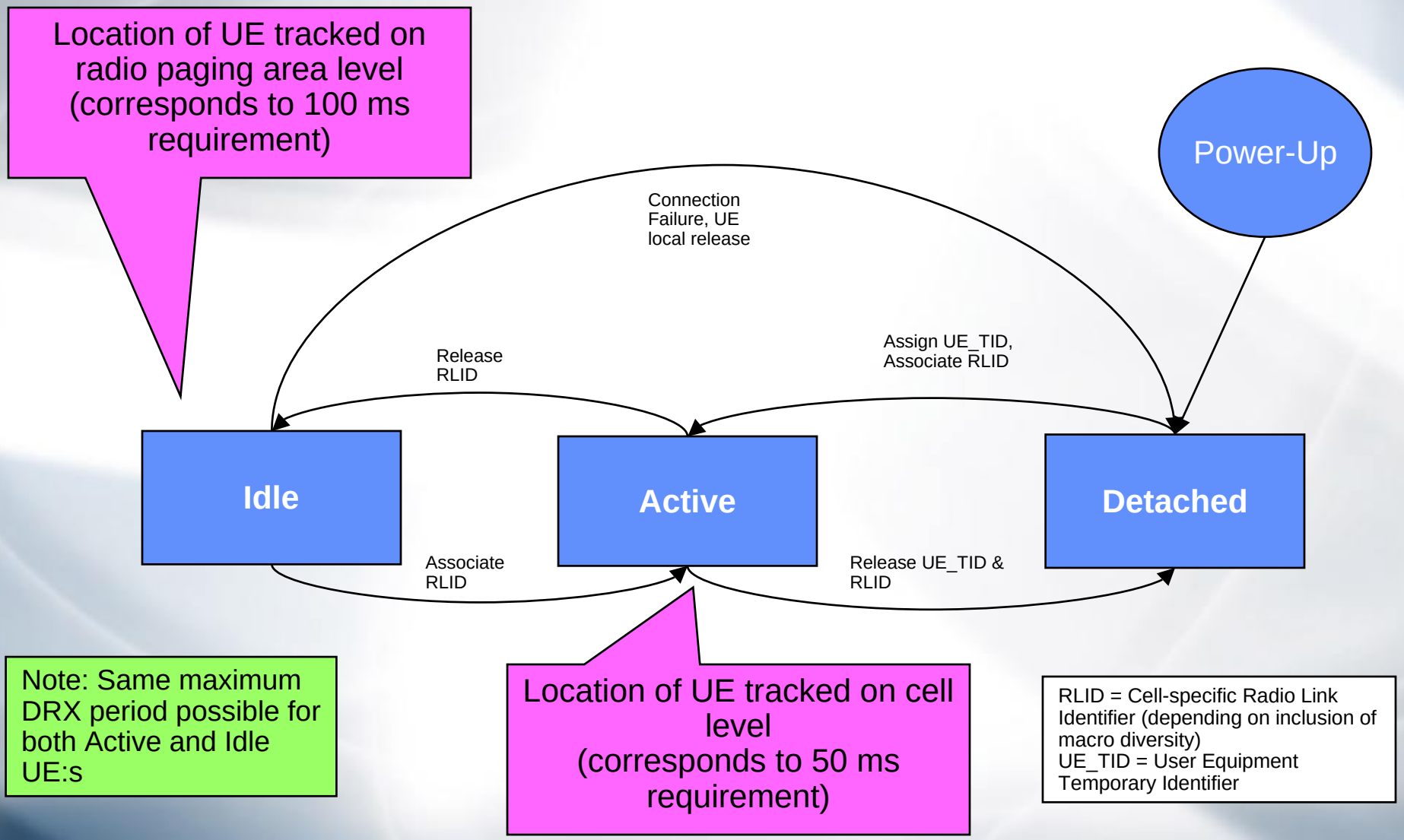

Note: Same maximum DRX period possible for both Active and Idle UE:s

RLID = Cell-specific Radio Link Identifier (depending on inclusion of macro diversity)
UE_TID = User Equipment Temporary Identifier

Simplified Set of Transport Channels

- In a fast packet-relay, no dedicated channels are needed
  - For uplink allocations persistence needs to be handled for e.g. VoIP
- FACH and PCH functions can be realized with a shared channel
- Support of MBMS FFS

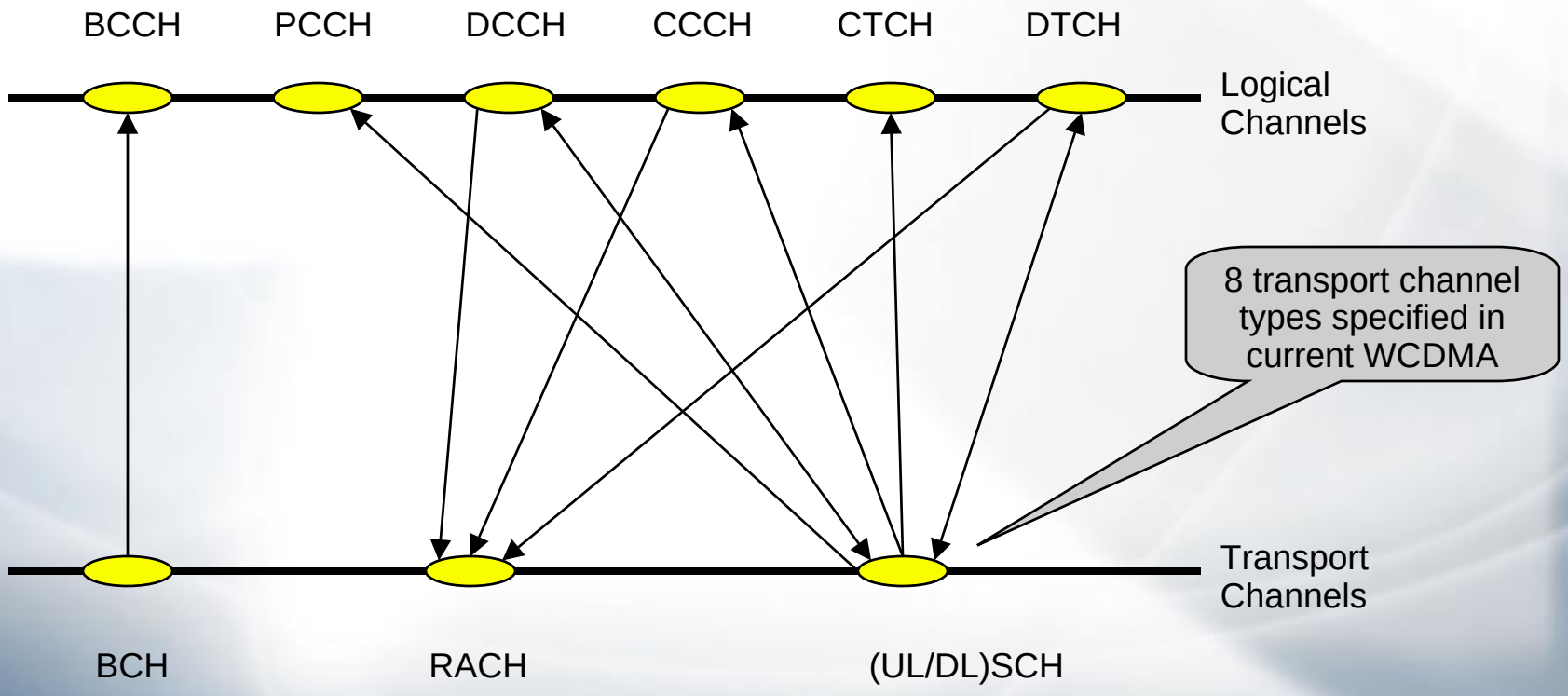

Summary of Proposed Modifications to RRC

- Implicit connection establishments
  - No bearer establishments in IP-world
  - Only packet-switched traffic – no need to manage the co-existence of circuit-switched and packet-switched
  - Create unnecessary context data
    - Shared channel configuration is instantaneous and doesn't need to be moved between Node B:s in handovers
  - Configuring bearers slows down connection establishments
- Reductions in number of transport channels
- Reductions of protocol states
- RRC signalling messages
  - Bulk of content consists of radio parameters, which will be different for a new radio interface
- => Low re-use for WCDMA RRC code, main elementary procedures (possibly excluding radio bearer configuration and soft handover) can be ported
- Further (semantic) change: RRC, as a link layer control protocol, should be a part of L2

Complexity of Extending Current Protocols

- It could be argued that for a dual-mode UTRAN EUTRAN terminal it would be simpler to extend current protocols rather than work on new specifications
- However, in practice dual-mode support of two different systems on one layer (e.g. physical layer) tends to lead to separation of functionalities also on other layers
- Additionally, carrying over complexity from existing protocols will not permit simplifications even when current UTRAN is no longer needed

1.

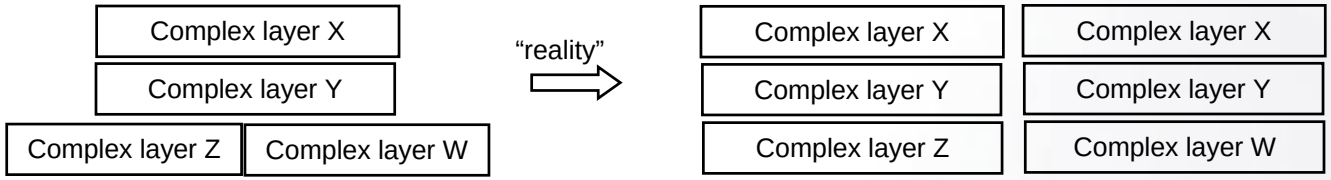

3G terminal complexity = X*Y*Z → 3.9G terminal complexity = X*Y*Z*X*Y*W

2.

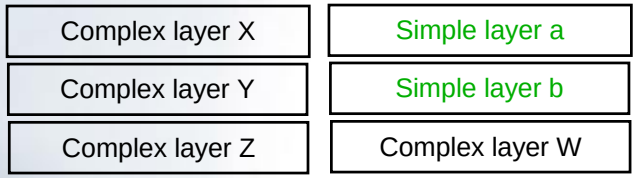

a << X, b << Y → Significant reduction in terminal complexity

- **Complexity in an existing 3G system does not justify the same complexity in the new system**

Future of RLC

- Hybrid ARQ Type-II or Chase combining solution expected to be introduced
  - Probably either as L1 or hybrid L1-L2 functionality
  - Role of RLC acknowledged-mode already decreased in HSPA
  - Making synchronous L1 HARQ robust enough for all cases may lead to suboptimal performance in typical cases => L2 backup still needed

- Therefore
  - L2 retransmission still needed for error-free performance, but complexity can be greatly reduced from WCDMA RLC
    - Majority of cases handled by lower-level HARQ
  - For operation without radio bearer negotiation, ARQ needs to work based on transmitter information
    - Poll-based status reporting
    - Inband indication of final (re)transmission if needed
      - Parameters like “MaxDAT” should no longer exist
  - Segmentation will still be needed
- => Open, depending on agreed functionality, whether a separate RLC is needed or if the functionality could be described as a part of MAC

Changes to MAC

- Current MAC model is based on a split between
  - RNC and Node B
  - Different transport channels
- With simpler transport channel structure and network architecture the various MAC entities can be combined into one
- MAC header structure can be further optimized based on a more flat MAC architecture
- The future MAC will even more clearly provide the framework for packet scheduling
  - Current DCH support no longer needed

PDCP Functions

- Current PDCP functions can be summarized as “Header Compression/Decompression” and “Detecting and mapping of a specific IP flow”
- PDCP should be further enhanced with better support for IP traffic
  - Detection of an IP “flow” based on the IP addresses and, if possible, also based on the application ID over IP and the port numbers, when needed and applicable
  - Assigning of PDCP SDU:s to radio L2 resources according to e.g. the DiffServ code point (FFS)
- Additionally, IP Compatibility Sublayer functions would be needed on C-plane
  - Provide an interface to RRC for the IP control protocols terminated in the Node B
  - No own signalling over the radio interface – contents in RRC signalling messages
  - Perform QoS policy configuration and possibly security-related functions

Radio Protocol Stacks for EUTRA

User Plane (+ IP Control)

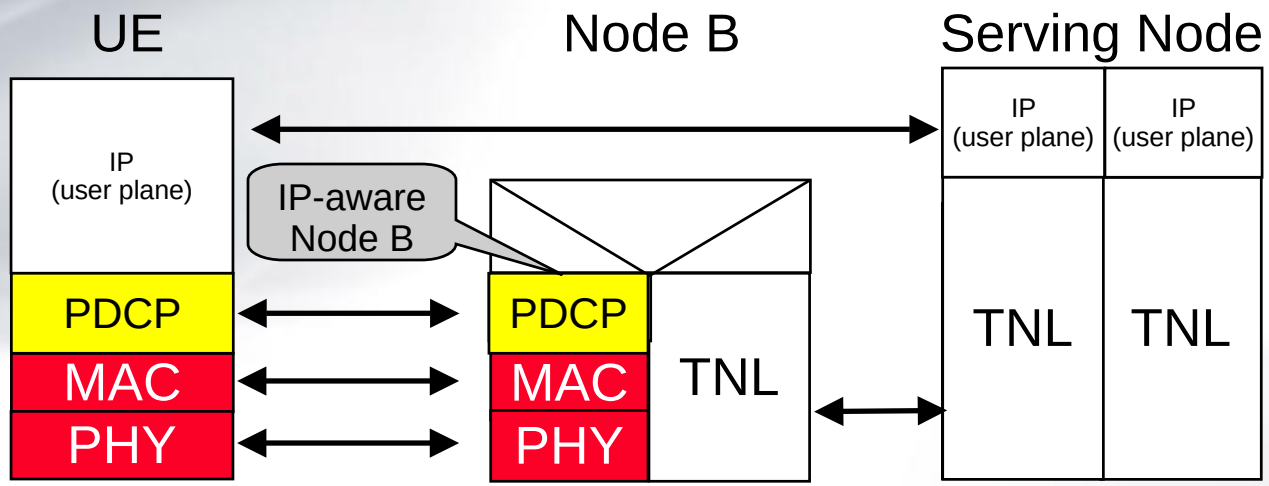

IP-based control signalling handled with U-plane traffic

PDCP = Packet Data Convergence Protocol

New or Major Update

Slightly Updated

Radio Control Plane

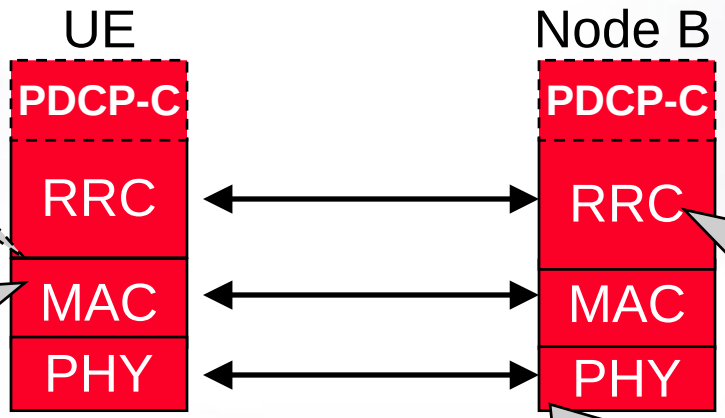

No separate RLC?

•MAC configuration to be more based on default parameters
•Fast packet relaying, no TFC support

•Majority of RRC message parameters will be new due to new radio interface
•Lighter radio bearers
•Change or remove many current RRC procedures

All radio protocols assumed to be terminated in Node B for low latency

NOKIA

Radio Link (L2) Key Changes Summary

- Major simplifications foreseen on RRC to support PS-traffic only
- New radio will also need new parameters – extending current RRC is not the way
- Best latency achieved without over-the-air radio bearer setup
- For transport channels, BCH, RACH and (uplink and downlink) shared channels are enough
  - Simplified set of RRC states
  - Similar power-saving mechanisms for idle and active terminals
  - Lower latency
- MAC reduced to one entity providing the framework for packet scheduling
- RLC reduced to segmentation and a simple L2 ack / unack support for L1-based Hybrid ARQ
- PDCP to improve mapping of IP flows into radio resources
- Control-plane PDCP function to be introduced for mapping IP control protocol information to RRC
- From L2 point-of-view it is preferable not to have to support macro diversity