Overall radio protocol and NW architecture for NR

R2-162573

NTT DOCOMO, INC., Copyright 2016, All rights reserved.

Topics

1. NR operation modes
   - LTE assisted NR operation
   - Standalone NR operation
2. CN connectivity for NR RAN
   - NR RAN connects to EPC
   - NR RAN connects to new CN
3. CU-DU split with open interface
   - CU: Central Unit
   - DU: Distributed
4. Overall architecture for LTE assisted NR and EPC connectivity

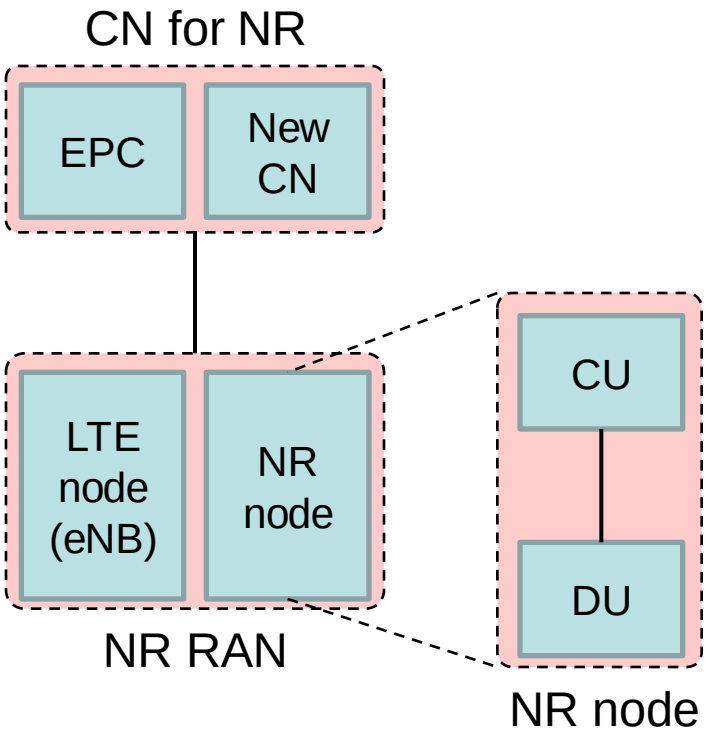

NTT DOCOMO, INC., Copyright 2016, All rights reserved.

1. NR operation modes

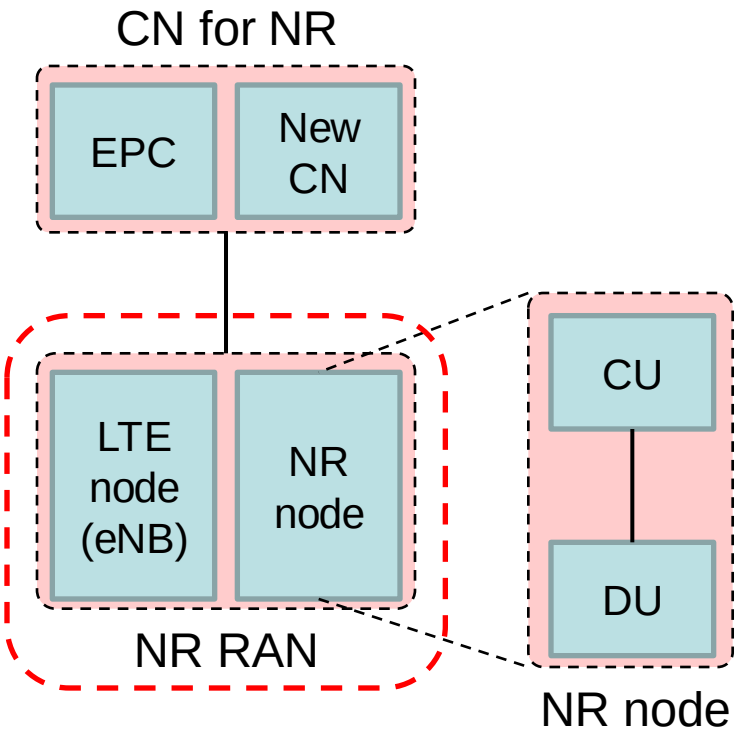

NTT DOCOMO, INC., Copyright 2016, All rights reserved.

NR operation modes

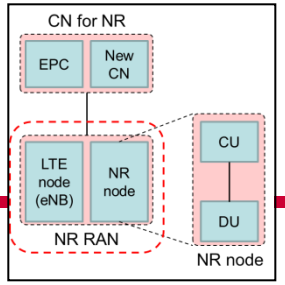

- Based on past inputs to RAN, it is clear that there are interest in both LTE assisted NR operation and Standalone NR operation
  - ➔ Both modes of operation need to be studied
  - ➔ The scope of Phase I will be determined when agreeing on Phase I WID(s)

NTT DOCOMO, INC., Copyright 2016, All rights reserved.

LTE assisted NR operation

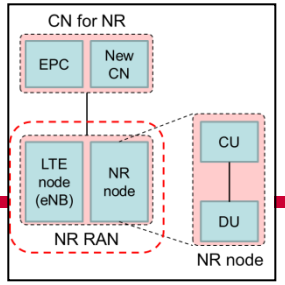

- Basic principle
  1. Base C-Plane connectivity provided by LTE
     - ✓ Good coverage and mobility ensured by already deployed and mature LTE networks.
       → Relying on LTE-A relieves coverage planning and deployment efforts for NR
  2. NR provides U-Plane boost via aggregation with LTE
     - ✓ NR provides U-plane boost adding on to LTE.
       → Aggregation ensures higher data rates with NR compared to legacy LTE

NTT DOCOMO, INC., Copyright 2016, All rights reserved.

LTE assisted NR operation

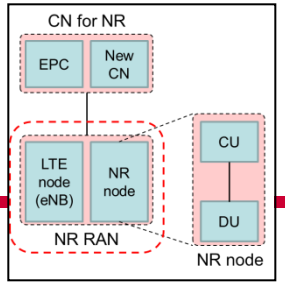

- U-plane aggregation/split at PDCP
  - PDCP split like R12 dual connectivity can be applied to the scenario where LTE & NR nodes are non-collocated, as well as to the scenario where they are collocated
  - This PDCP may be located on the LTE side or the NR side, and this needs study
- Open interface between LTE node (eNB) and NR node
  - Could be similar to X2 defined for R12 dual connectivity
  - But it should allow for efficient/fast data distribution between eNB and NR node

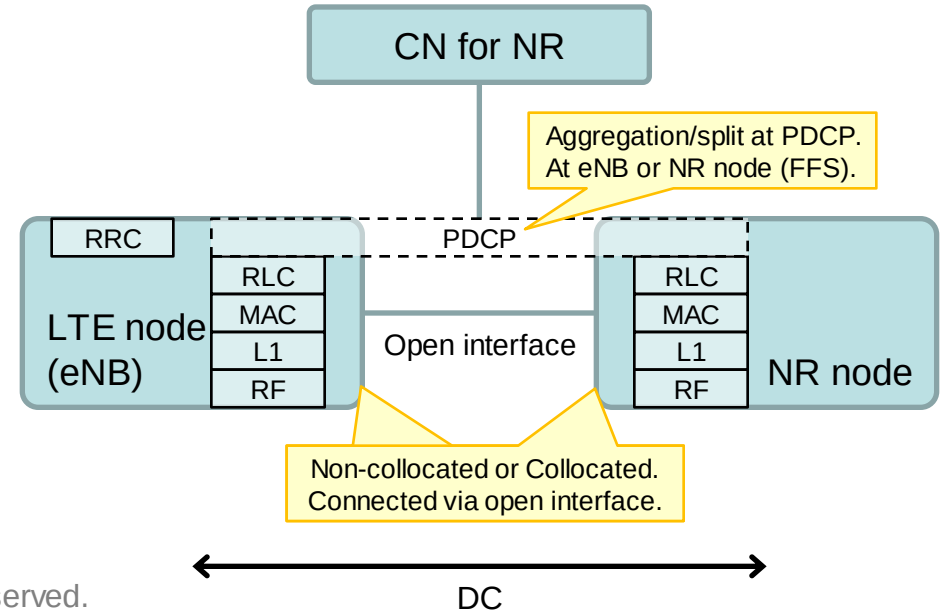

NTT DOCOMO, INC., Copyright 2016, All rights reserved.

Standalone NR operation

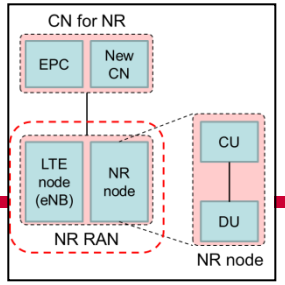

- For standalone operation, NR C-plane protocols/procedures need to be defined, and there seems to be various approaches for this on a high level
  - Approach 1: By extending the existing LTE protocols (extension approach)
    - ✓ Possible benefits: Earlier availability of standalone NR operation
    - ✓ Possible drawbacks: Potential overhead/restriction incurred by existing LTE specifications
    - ✓ Makes sense if basic C-Plane protocols/procedures for NR will be similar to that of LTE, and if functional extensions for NR are of “build-on nature” to LTE
  - Approach 2: By introducing brand new protocols (clean slate approach)
    - ✓ Possible benefits: Opportunity to optimize behavior/specification for standalone NR operation
    - ✓ Possible drawbacks: Delayed availability of standalone NR operation
    - ✓ Makes sense if C-plane protocols/procedures are to change drastically compared to LTE
  - Approach 3: Combination of the extension approach and the clean slate approach
    - ✓ ??

NTT DOCOMO, INC., Copyright 2016, All rights reserved.

2. CN connectivity for NR RAN

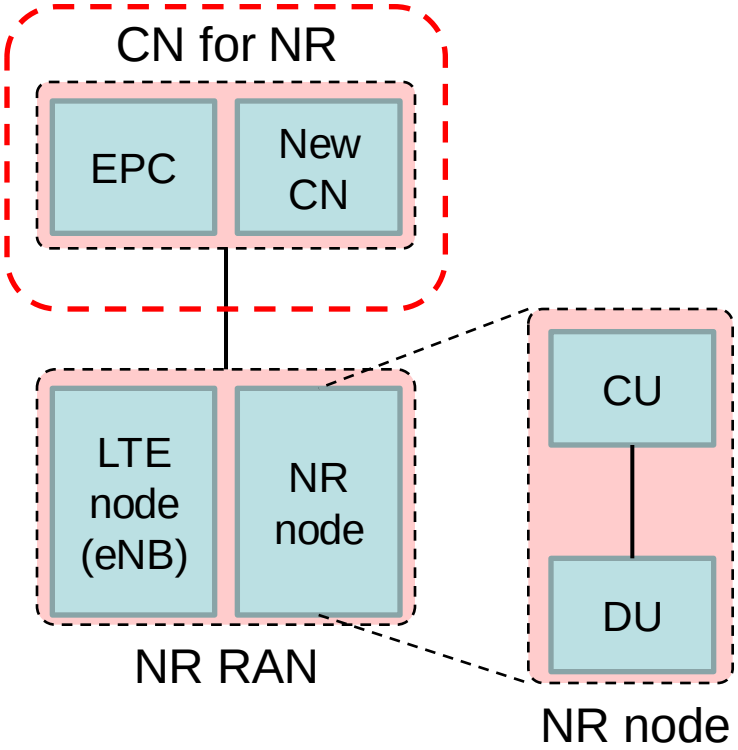

NTT DOCOMO, INC., Copyright 2016, All rights reserved.

CN connectivity for NR RAN

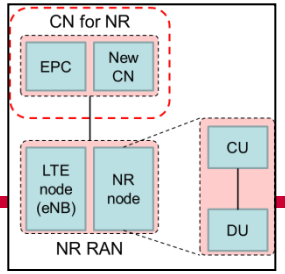

- Two options can be considered
  1. NR RAN connects to existing EPC
  2. NR RAN connects to some new CN

NTT DOCOMO, INC., Copyright 2016, All rights reserved.

CN connectivity for NR RAN

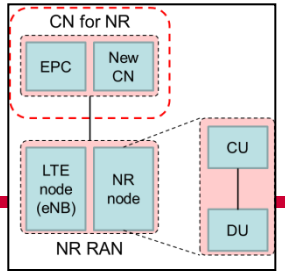

- NR RAN should be able to connect to EPC
  - ✓ EPC is already serving and is well suited for eMBB type traffic
  - ✓ Existing infrastructure can be used allowing early / low-cost NR introduction
  - • Impacts (if any) on LTE-NAS and S1 specifications need to be addressed
- If New CN brings benefits (e.g. it allows support of new services like URLLC)
  - ✓ NR RAN should also be able to connect to such New CN
  - ✓ In addition, EUTRAN should also be able to connect to such New CN
  - • Benefits/necessity of New CN to be studied with SA2 (FS_NexGen)
- NR RAN / EUTRAN connectivity to EPC and New CN may co-exist (NW slicing)
- Allow for independent/modular evolution of RAN and CN

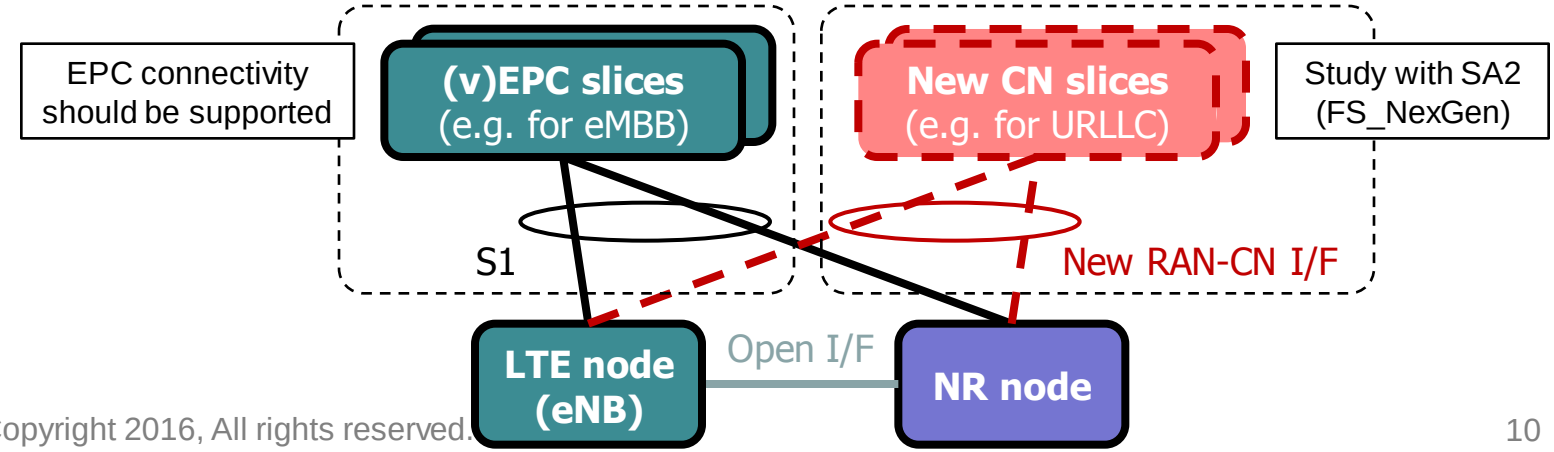

NTT DOCOMO, INC., Copyright 2016, All rights reserved.

3. CU-DU split with Open interface

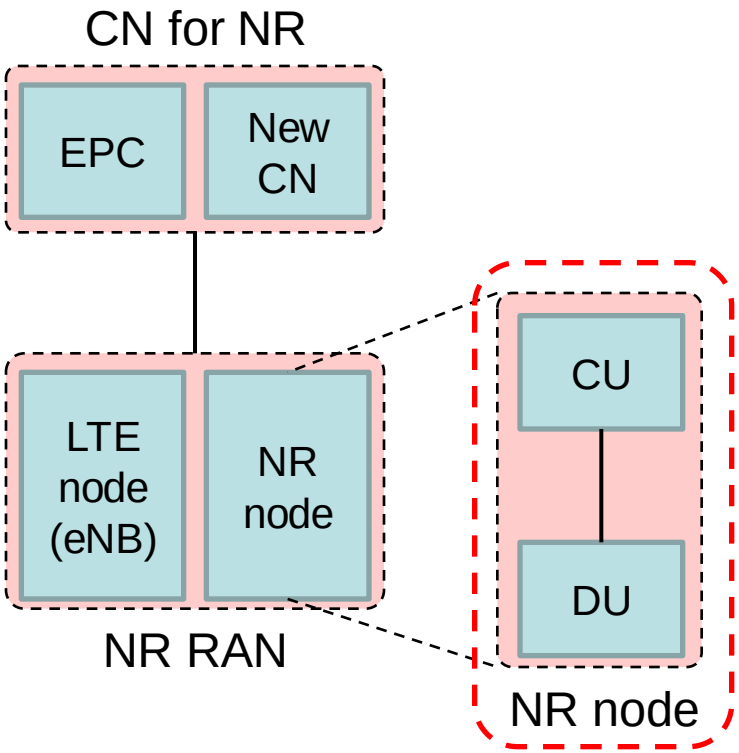

NTT DOCOMO, INC., Copyright 2016, All rights reserved.

CU-DU split with Open I/F

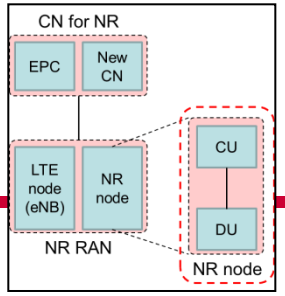

- Already today, operators are deploying networks using the C-RAN architecture
  - ✓ Composed of centralized digital baseband processing units (CU: Centralized Unit), and remotely distributed radio units (DU: Distributed Unit)
  - ✓ CPRI is the defacto standard used today for the fronthaul link between CU and DU

http://rethink-wireless.com/2011/12/08/korea-telecom-plans-worlds-commercial-cloud-ran/

Korea Telecom plans world's first commercial Cloud-RAN

Will roll out LTE using a virtualized network based on a Samsung/Intel platform, but barred from refarming 1.8GHz band yet

The operators in China, Korea and Japan are far more willing than their western counterparts to think laterally about how they design 4G networks. The world's largest mobile market, and its two most broadband-hungry, are all trialling or deploying the new 'Cloud RANs', at a stage when US and European carriers mainly see them as an option for an LTE-Advanced future.

China Mobile has major Cloud-RAN trials ongoing with various partners including Alcatel-Lucent, Intel, Huawei and ZTE. Now, KT has gone one better with a commercial roll-out, aiming to leapfrog its larger mobile rival, SKT. The latter has an advanced strategy for delivering cloud-based services over various access networks (LTE, Wi-Fi, 3G, fiber and copper). But KT – which is also integrating all those access technologies plus WiMAX – is going a step further and placing much of its baseband processing in the cloud too.

This is the central concept of C-RAN, deconstructing the traditional base station to leave a low power unit at the cell site, integrating antenna and radio, while centralizing all the baseband activity and supporting hundreds or thousands of sites flexibly from the cloud. KT calls its LTE approach its Cloud Communications Center (CCC) architecture, and it has been co-developed with Samsung and Intel. The latter is leaping on the opportunity to bring its expertise in servers and data centers to the telco network, and in this case its platforms are integrated with Samsung modems to create a centralized exchange for signals communications processing. This is linked by fiber (essential for C-RAN) to the cell sites.

As seen in vendor strategies like ALU's lightRadio and Nokia Siemens' Liquid Radio, the CCC also harnesses virtualization technology so that the central processing resources can be allocated flexibly according to the peaks and troughs of demand in different sites. Yung Kim, senior EVP head of strategy planning at KT, told TelecomAsia: "For example, at a sports stadium you can dynamically allocate more resources for that area during a game on a millisecond basis." The design also improves coverage at the cell edge, he added, claiming twice the capacity per cell, on average, because of better improved edge management.

http://www.sk.com/Channel/News/view/1035

SK telecom | **World`s First Application of Advanced-SCAN**

SK Telecom (CEO & President Ha Sung Min, www.sktelecom.com) applied world`s first `Adva
between base stations.

Through this technology that automatically controls the signal interference between base stati
SCAN technology.

In addition, after applying the `Advanced-SCAN` into Boondang area to examine the quality in
efficiency will be maximized in the densely-populated countries such as Korea.

The `Advanced-SCAN` applied to the LTE network by SKT is one of world`s best network tech
upgrade of the technology in November 2011. It took only two months to apply this technology

By supplementing the existing SCAN technology, the Advanced-SCAN technology has both a
environment. This new technology evolved into a smart base station, beyond a simple virtual

The signal interference control technology uses virtualization of digital unit`s wireless environm
provide the optimized wireless environment. Therefore, customers who are in between two dif
through many different digital units, they can receive more stable data services than the existi

The traffic reallocation technology is to analyze the real time traffic concentration and to reallo
stable LTE services in case of traffic concentration.

With the Advanced-SCAN technology, SKT is planning to achieve smart evolution of the existi

Kwon Hyuk Sang, President of SKT N/W Division, said, `SKT is providing outstanding LTE qu
By applying various PETA solutions including Advanced-SCAN into nationwide LTE networks

https://www.nttdocomo.co.jp/english/info/media_center/pr/2015/0205_00.html

Press Releases

February 5, 2015

DOCOMO Verifies Advanced C-RAN in Outdoor Commercial Environment for Stress-free Communications in High-traffic Areas — Will enable efficient LTE-Advanced deployment with increased radio network capacity and improved throughput —

Print | Tweet | Like 2 | G+1 0 | R&D

TOKYO, JAPAN, February 5, 2015 --- NTT DOCOMO, INC., a personalized mobile solutions provider for smarter living, announced today that it successfully completed an outdoor-commercial-environment verification of its Advanced C-RAN, a network that efficiently increases radio capacity and transmission speed, especially in train stations, large-scale commercial facilities and other high-traffic areas, by achieving a 240Mbps downlink using 35MHz bandwidth, on February 3, 2015.

The successful outcome of the verification paves the way for commercial deployment of the technology together with the launch of DOCOMO's LTE-Advanced network in March.

The verification was conducted using category-6 mobile devices capable of download speeds up to 300Mbps in the Yokosuka area of Kanagawa Prefecture, south of Tokyo, beginning in November 2014. The purpose was to verify performance and optimize the Advanced C-RAN system for commercial deployment.

Advanced C-RAN is a network based on a concept proposed by DOCOMO in 2013 that leverages carrier aggregation (CA) technology to enable users to receive data simultaneously over small cells for localized coverage deployed in congested areas, and macro cells that provide wider area coverage. This benefit, which will provide stress-free communications in high-traffic areas, will be achieved by using small cells that significantly increase throughput and system capacity while maintaining mobility provided by the macro cells.

"Advanced C-RAN represents an important contribution to the evolution of LTE and will be a key technology for the realization of 5G in the future," said Seizo Onoe, DOCOMO's Executive Vice President and Chief Technology Officer.

DOCOMO expects its LTE-Advanced users to enjoy stable, high-speed mobile experiences thanks to greater throughput and unbroken communication even in high-traffic areas.

Going forward, DOCOMO will continue to develop technologies that improve the capacity and throughput of its wireless communications network, the world's most advanced mobile environment.

NTT DOCOMO, INC., Copyright 2016, All rights reserved.

CU-DU split with Open I/F

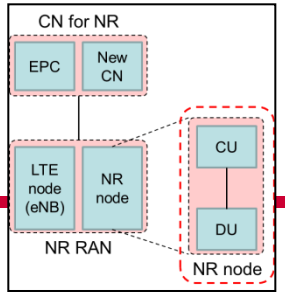

- C-RAN is a promising architecture also for NR, but the fronthaul may not scale considering peak data rates and massive MIMO for NR
  - ➔ Need to study new DU-RU functional splits for NR

DL rate for 150Mbps (2layer/2Tx) LTE

DL rate for 8Gbps (8layer/64Tx) NR ex.
~if split is not changed~

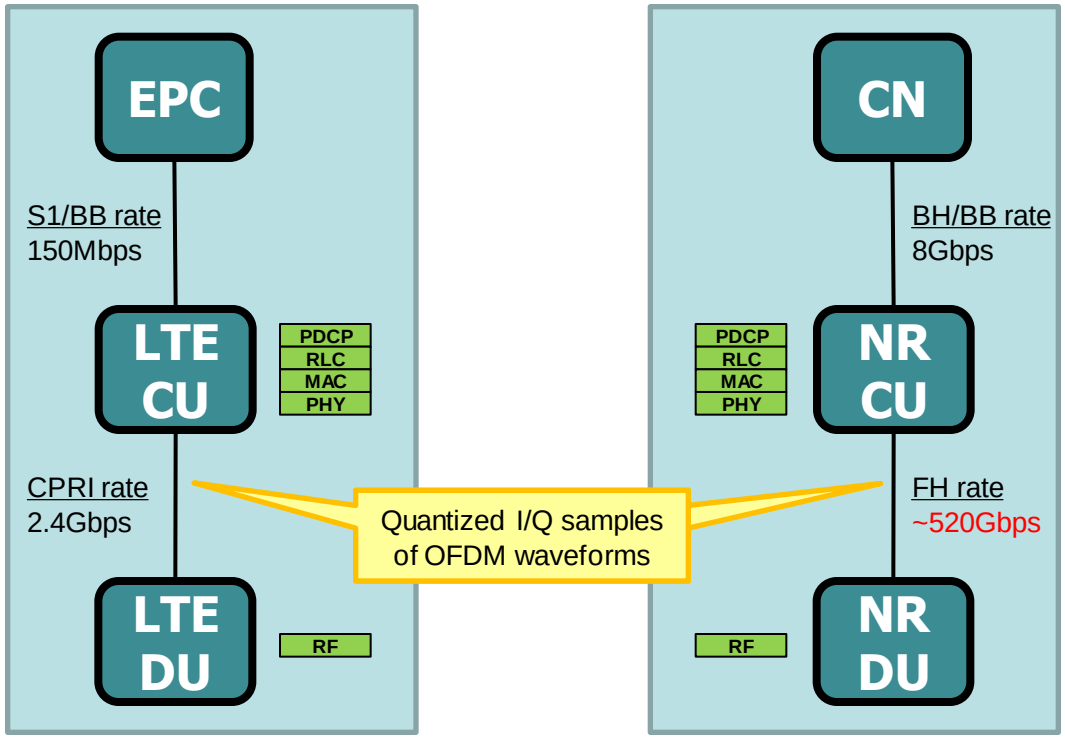

NTT DOCOMO, INC., Copyright 2016, All rights reserved.

CU-DU split with Open I/F

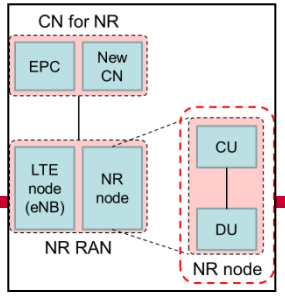

- FH bandwidth can be relaxed by moving L1 functions to the DU
- Seems better to have two CU-DU split options to cater for different FH networks
  - ✓ Lower layer split (e.g. MAC-PHY) for low delay fronthauls
  - ✓ Higher layer split (e.g. PDCP-RLC) for higher delay fronthauls

Conventional split
(reference)

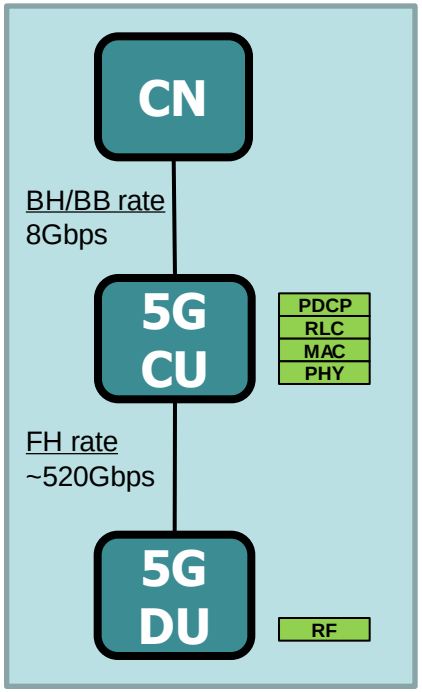

Lower layer split
(for low delay FH: e.g. P2P links)

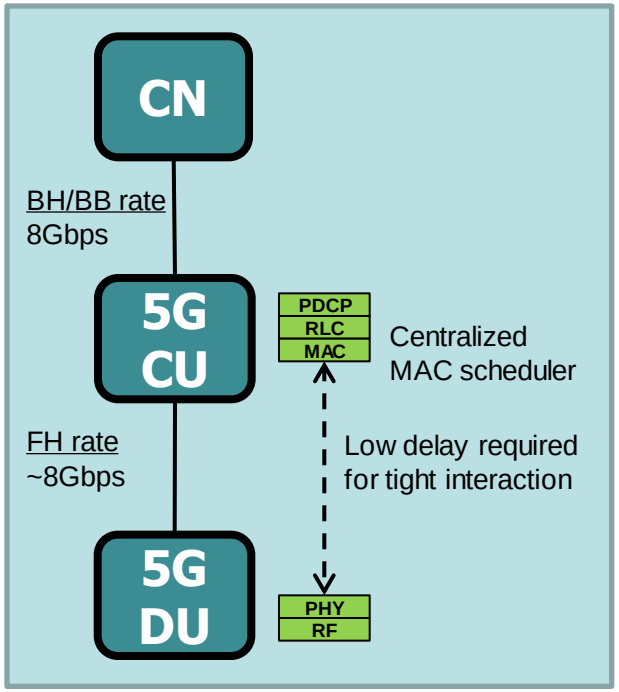

Higher layer split
(for higher delay FH: e.g. switched NW)

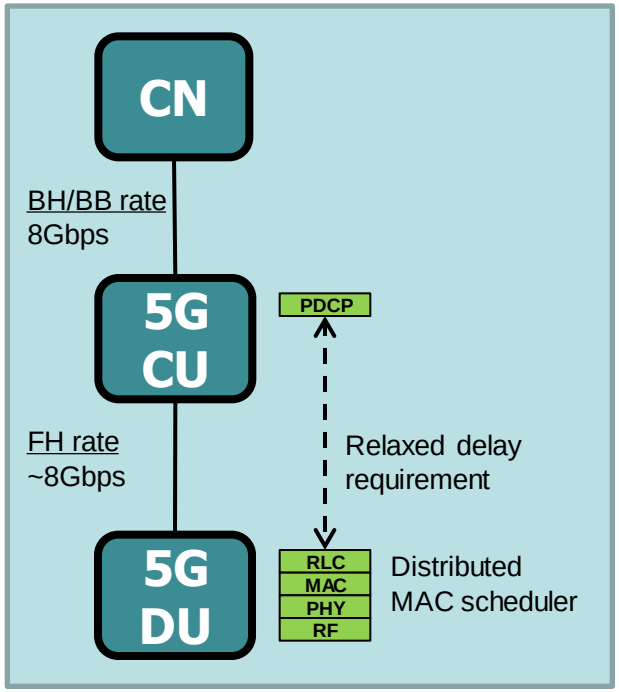

NTT DOCOMO, INC., Copyright 2016, All rights reserved.

CU-DU split with Open I/F

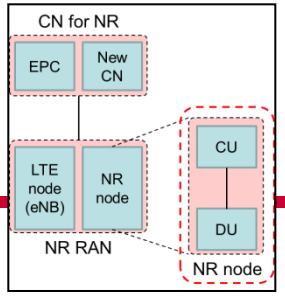

- The fronthaul interface between CU and DU should be made open to realize multi-vendor CU/DU operation
  - ➔ Fronthaul interface aspects (e.g. data, control, management, transport) needed to facilitate such operation should be identified, and the best place to specify them (e.g. RAN3, SA5, outside 3GPP, …) should be studied

NTT DOCOMO, INC., Copyright 2016, All rights reserved.

4. Overall architecture for LTE assisted NR and EPC connectivity

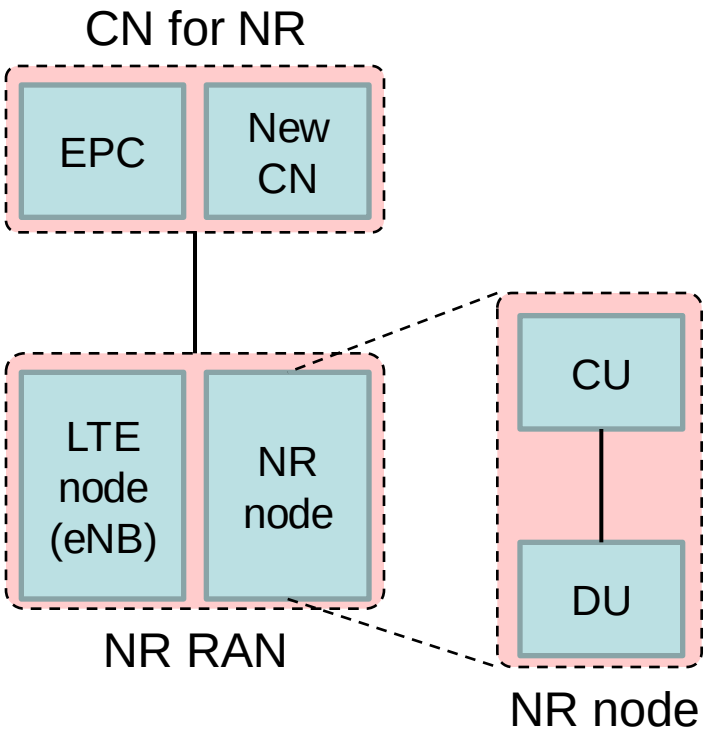

NTT DOCOMO, INC., Copyright 2016, All rights reserved.

Overall architecture

- Below figures is an illustration of the overall architecture with (1) LTE assisted NR operation, (2) EPC connectivity and (3) lower layer CU-DU split for NR node

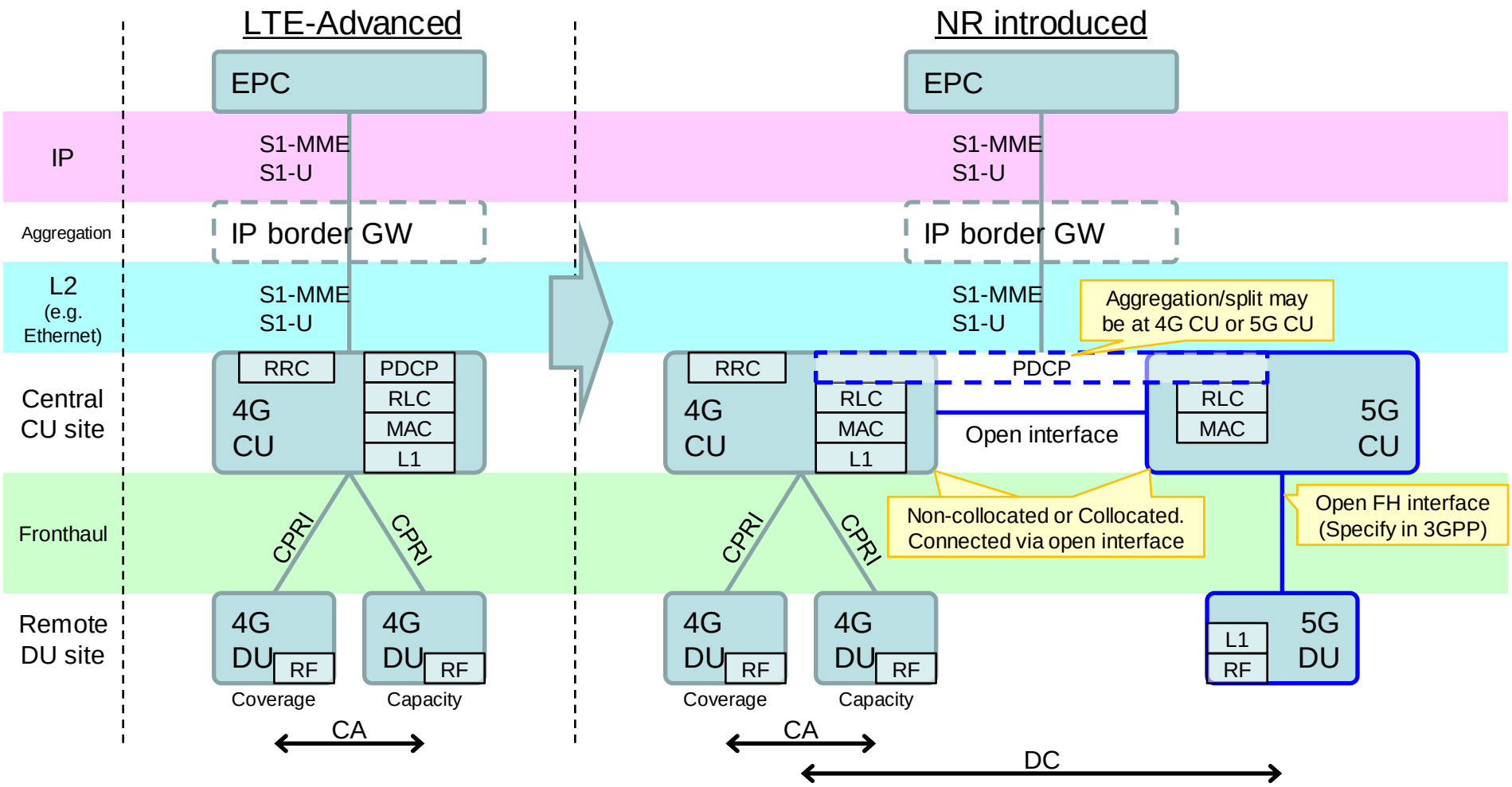

NTT DOCOMO, INC., Copyright 2016, All rights reserved.