3GPP TSG-RAN WG2#59 **R2-073535**
Athens, Greece
20 - 24 August 2007

Agenda item: **5.2.2**

Source: **Motorola**

Title: **RLC AM Re-segmentation mechanism and header structure**

Document for: **Discussion and Approval**

1 Introduction

Due to the dynamic nature of the TB size, LTE system has to support the variable size RLC PDUs. There has been considerable discussion on the issue of PDCP SN re-use, including during the conference call hosted by NTT DoCoMo. It has been recognized that the issue of RLC SN definition needs to be quickly resolved in order to make progress on other issues. This contribution does not address PDCP SN re-use itself, but focuses on the header design, assuming a decision is made to not re-use PDCP SN. Two alternatives are proposed with advantages and disadvantages for each highlighted in order to help arrive at some conclusions during RAN WG2# 59.

2 Discussion

As already captured in RLC Stage 3 TS (36.322), If the RLC PDU or RLC PDU segment to be retransmitted does not fit into the new TB size selected by lower layer at the particular transmission opportunity, the AM RLC entity can re-segment the RLC PDU or RLC PDU segment to be retransmitted into RLC PDU segments, as many times as needed for reliable transmission of the PDU. Details of the procedures of RLC PDU-segment generation at the transmitter and reassembly at the receiver are still open in the RLC stage 3 TS 36.322. In particular it has not been concluded if the re-segmentation should happen over the entire PDU (including RLC header) or just on the PDU payload.

LI Size

During the RLC conference call held on August 9, 2007 it was decided that 11 bits for the LI should serve as the baseline. Further optimizations on a radio bearer basis are FFS.

SO/LSF

It is already agreed to include SO and LSF in the RLC PDU Segment header.

S bit

An indication of a PDU or PDU segment is seen necessary to ensure appropriate recognition of the header format/contents.

D/C

In the interest of saving RLC overhead, it has been proposed to provide indication of data vs. control PDUs using the MAC header. The decisions on individual vs. joint byte alignment of fixed and extension headers are still open. It seems unncecessary to have RLC protocol information be carried through MAC protocol layer and in fact it is not clear that this in itself ensures overall overhead reduction – the overhead is simply pushed into the MAC layer.

Resegmentation procedure

It is already agreed to include SO and LSF in the RLC PDU Segment header. There are two approaches possible as describe below.

Approach 1: Segment the entire PDU including the RLC PDU header

This re-segmentation procedure approach is depicted in the figure 2.1 below. It basically segments the entire PDU including the header as sequence of segments. The segment header as shown in the diagram includes the following fields:

- D/C&S: 2 bit field to indicate if it is Data PDU, Control PDU or Data Segment
- SN: sequence number, same as the SN in the PDU
- SO: segment offset into the PDU (including the PDU header)
- LSF: last Segment Flag to indicate if the last of the segments is received.

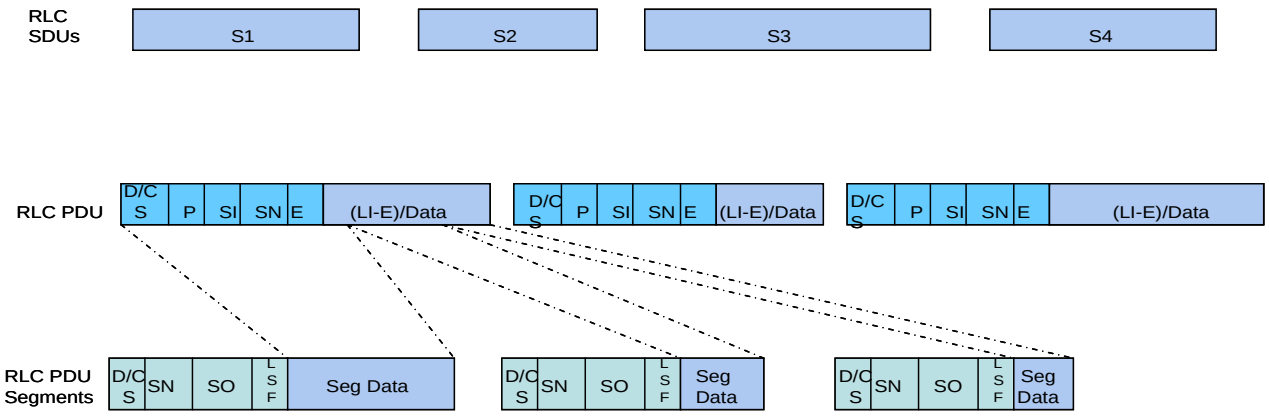

Figure 2.1: Segmenting the whole PDU

Advantages of this approach are:

- Simple and easy to implement including multi-level re-segmentation. Fewer cycles to build segment header.
- Keeps the header overhead due to re-segmentation small.

Disadvantages:

- Two pass re-assembly (segments to PDU and then SDU).
- Slightly inefficient when a segment contains a whole SDU and out-of-order delivery is allowed (mainly during handovers).
- Issue if first segment containing original header is lost – but with re-segmentation and HARQ this should be a rare occurrence.

Approach 2: Segment only the payload of the PDUs

In this approach only payload part of the PDUs are segmented. Figure 12.2 below depicts this procedure.

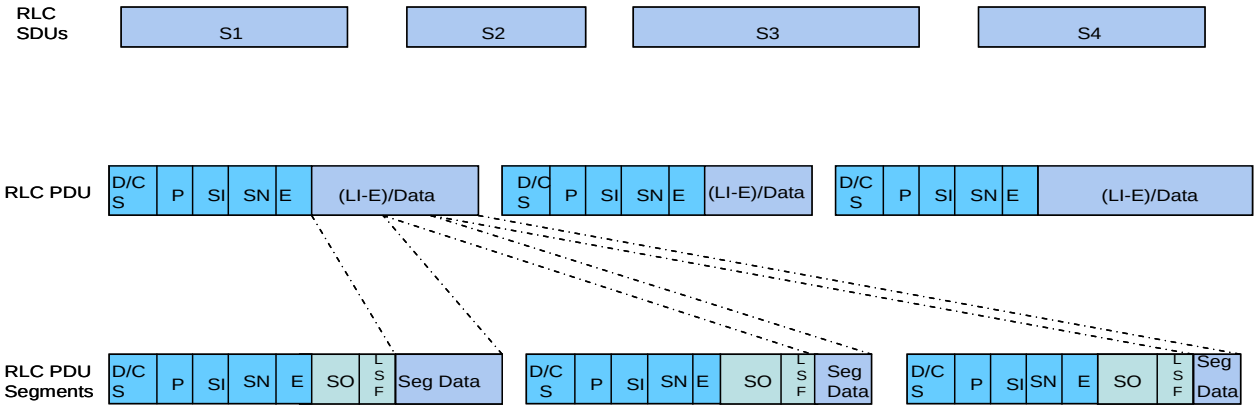

Figure 12.2: Segmenting the payload of the PDU

As shown in Figure 12.2 PDU segment header pretty much looks like the PDU header itself. Data for most of the fields in the segment-header will have to be built at the time of segmentation from the original PDU or segment from which (re)segmentation is being done.

SegData includes a set of (E, LI) fields for the data that is included in the segment

Advantages:

- Single-pass re-assembly
- Whole SDUs contained in the segments can be delivered to the upper layer
- Efficient if segments contain full SDUs and if out-of-order delivery is allowed (during HOs).

Disadvantages:

- Perhaps the biggest drawback of this scheme is the need to rebuild most of the header fields except SN from the original header thus implying more processing overhead.
- Overall rather complicated
- Bigger header overhead

Overall, approach 1 provides significant implementation advantages by avoiding repeated header builds. The one issue where Approach 1 is not transparent to the delivery process is when the segment containing the original PDU header is lost. However, this is an issue only if the other segments that were received included full SDUs i.e. in the concatenation case.

4 Conclusions

It is proposed to discuss and agree on Approach 1 if it has been concluded that RLC SN shall not rely on PDCP SN re-use. In addition, it is proposed to include the D/C and S bits in the header. The inclusion of the poll bit can be conditioned to the final allocation of bits to the individual fields and the resulting header size and it's impact on byte alignment.

References

[1] RLC Telco Minutes, Rapporteur, August 10, 2007.