R2-060946 PHY Layer Models

Motorola

Agenda Item 3.7

UE DL Physical Layer Model-1

- **This model applies in case:**
  - **Transport block (TB) is split into two sub-blocks sharing one CRC, and a different MCR combination is applied to each sub-block**
  - **MAC PDU is split into two transport blocks and to each TB, a separate CRC applied and a different MCR combination are applied**
- **The different physical steams carry coded bits from different Resource Assignments in the TTI**

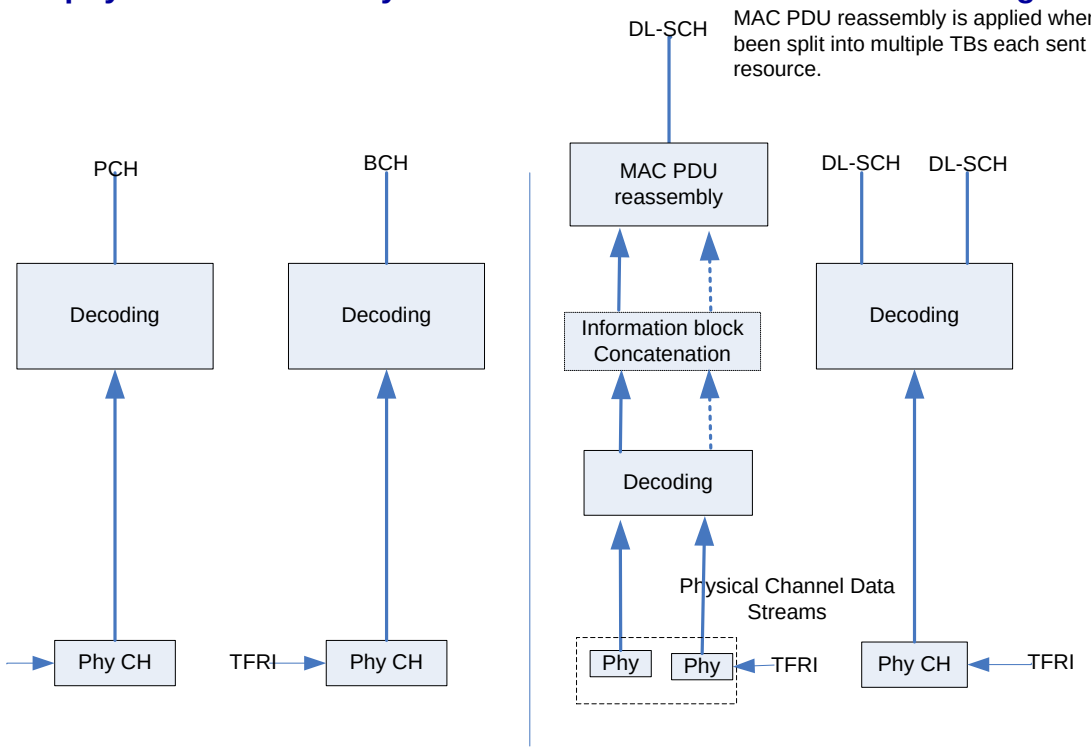

Information Block concatenation is required in case the separate physical streams each carry fragments of a transport block (one CRC). If Information block concatenation is used then MAC PDU reassembly is not required.

UE DL Physical Layer Model-2

- This model applies when the transport block is coded with one channel coding scheme and the coded bits are allocated to multiple Resource assignments using potentially different modulation schemes.

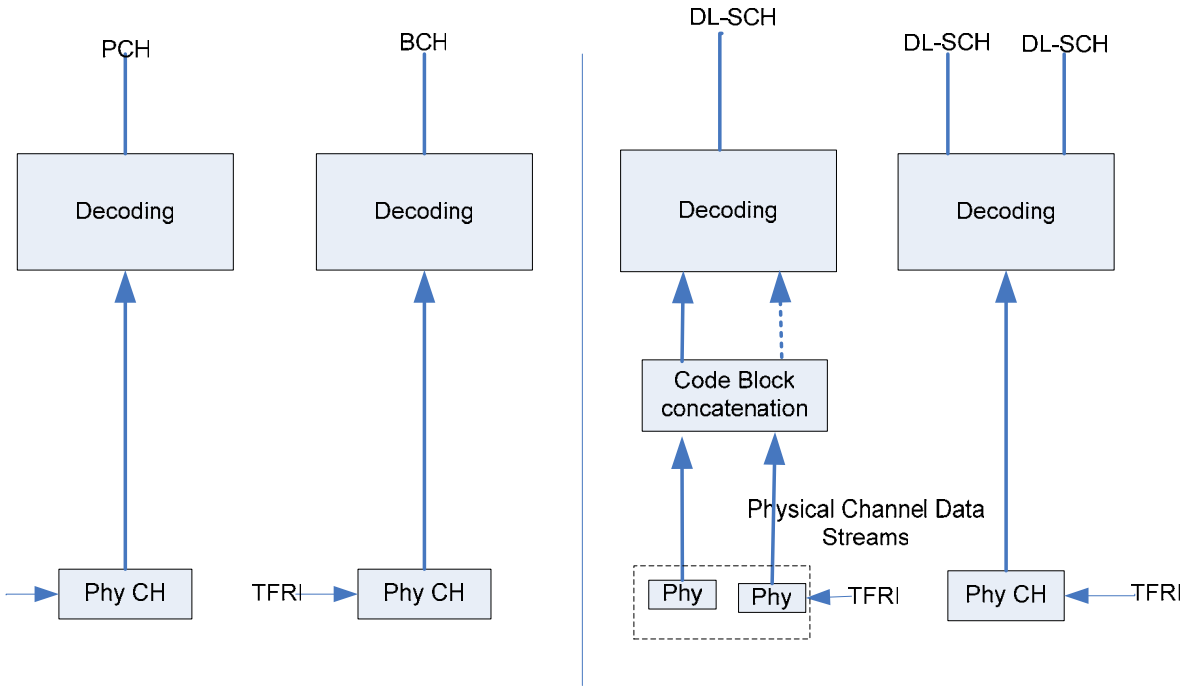

Summary

- The physical layer models for the downlink shared channels shown here support multiple transport channels being transmitted to the UE in one sub-frame
- Similar model would apply for the uplink case
- The PCH is mapped to the same time-frequency region as the DL shared channel
- The BCH is mapped to the first sub-frame of the 10 ms super frame.