R2-060123 MAC Architecture and Physical Layer Models

Motorola

Agenda Item 8.1

Downlink/Uplink Transport Channels

- **Downlink Transport Channels**
  - **BCH – Broadcast channel**
  - **PCH – Paging channel**
    - Associated with related indication information
  - **SCH – Shared Channel**
    - Shared Data Channel
- **Uplink Transport Channels**
  - **RACH - Random Access Channel**
  - **SCH – Shared Channel**

Logical Channel Mapping

- **Downlink**
  - CCCH, DCCH and DTCH mapped to SCH
  - BCCH mapped to BCH
  - PCCD mapped to PCH
  - MTCH mapped to SCH
- **Uplink**
  - CCCH mapped to RACH
  - DCCH and DTCH mapped to SCH

Multiplexing

- **Logical Channel Multiplexing**
  - **Multiple logical channels can be multiplexed onto one transport channel**
  - **Need for transport channel switching**
    - Based on TTI characteristics i.e. whether defined as variable or semi-static/fixed
  - **Similar to HSUPA**
    - Receiver segregates packets for the respective logical channels prior to re-ordering

Transport Channels – Multiplexing, etc.

- **Adaptive Frequency Selective Allocation**
  - **Typically a transport block mapped to a Resource Block is associated with a particular Modulation and Coding Rate (MCR) based on CQI information**
    - This still allows a different UE's transport block mapped to this Resource Block to use a different MCR; the two UEs are assigned different parts of the Resource Block (different sub-carriers).
  - **Advantageous to support Multiple Resource Blocks assigned to one user within a TTI, with the distinct Resource Blocks using different MCR combinations**
    - Can be applied for UE's being served with single service or multiple services
    - Different combinations possible
      - Same modulation, different code rate
      - Different modulation, same code rate
      - Different modulation and code rate

Adaptive FS Allocation - Single Service

- **In case of UE being served with a single service:**
  - Data from a logical channel can be scheduled using a Multiple Resource Block Assignment (multiple resource blocks within same TTI)
  - Three choices:
    - MAC PDU is treated as one TB and one CRC is attached
      - » The resulting TB+CRC is split into multiple sub-blocks (equal in number to number of Resource Block Assignments) and each sub-block is then separately coded, interleaved and data-modulated using MCR combinations optimized for that Resource Block (Scheme 1)
      - » The resulting TB+CRC is coded jointly and then split into multiple code words which can be (potentially) modulated independently and mapped to separate Resource Assignments. (Scheme 2)
    - MAC PDU is split into multiple transport blocks and a CRC attached to each
      - » Each TB is then separately coded, interleaved and data-modulated using MCR combinations optimized for that Resource Block (Scheme 3)
  - Different from the current case where the transport channel emits a single TB in a TTI, and the Transport Channel is associated with a single MCR combination for all transport blocks emitted in that TTI

Adaptive FS Allocation – Multiple Services

- **In case of UE being served with multiple services in one sub-frame**
  - Multiple transport channels, each associated with the logical channel linked to the different services being scheduled
  - Multiple transport blocks (one per service) in a sub-frame - each is mapped to only one of the multiple assigned Resource Block and uses potentially different MCR combination
- **Useful in a number of scenarios**
  - Mixed voice+data services
    - Typically separately coded (1 or more code-words) on separate HARQ processes using different TTIs.
  - Applications using Layered Codecs
    - Foundation layer and enhancement layer transmitted over different resource blocks (can even be combination of FS and FD allocations)

Physical Layer Processing Scheme 1

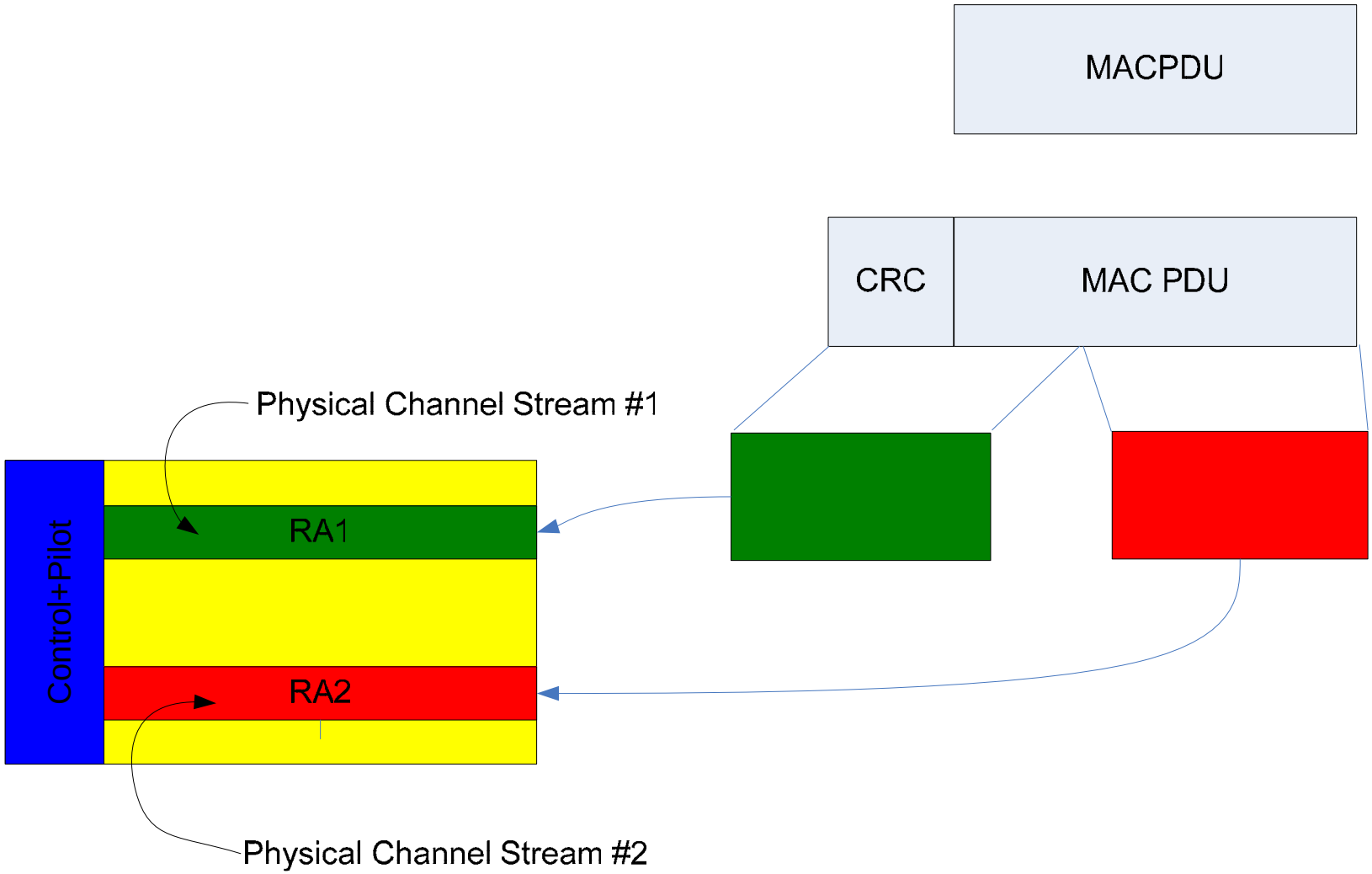

Physical Layer Processing Scheme 3

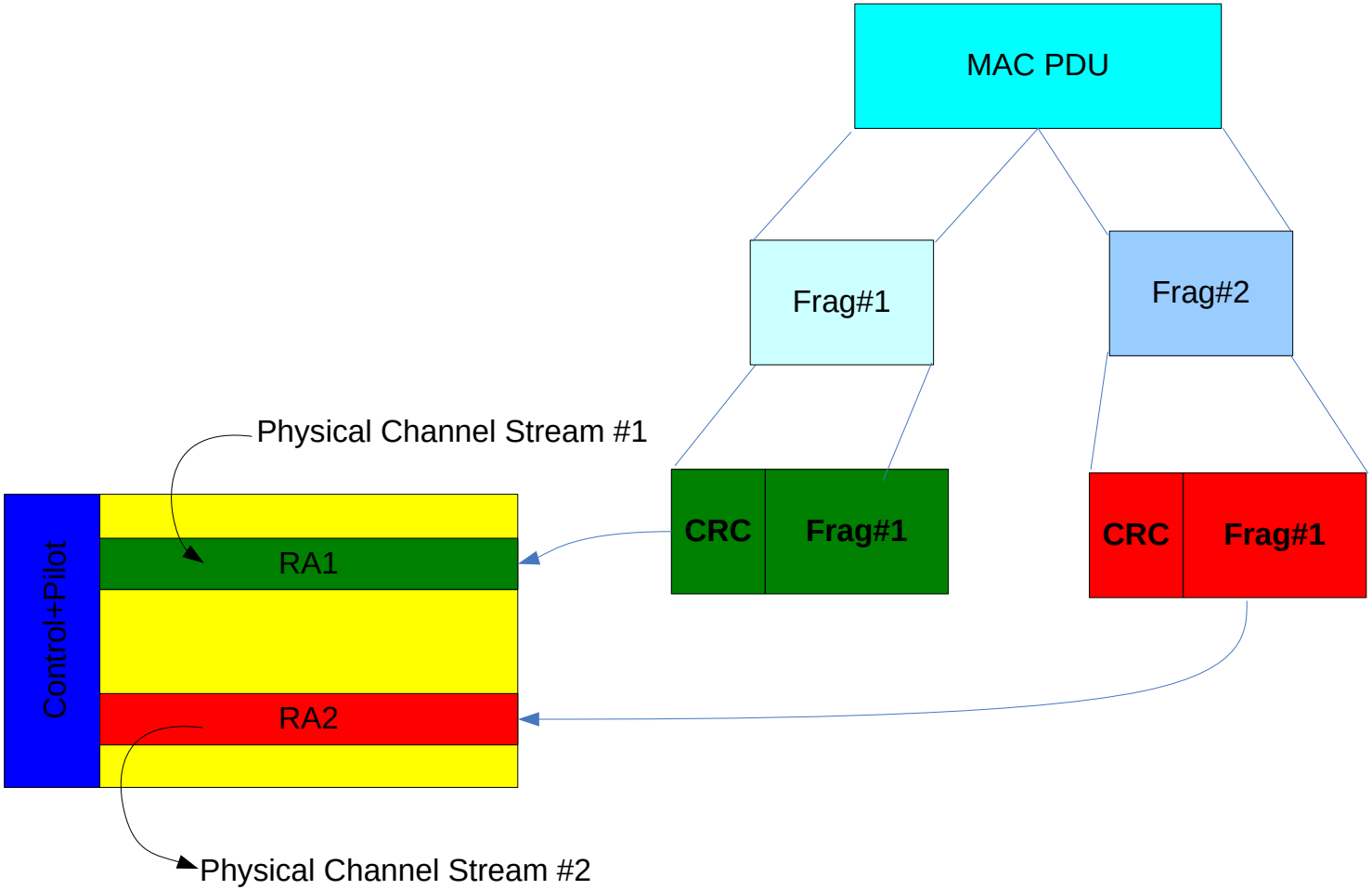

Adaptive FS Allocation

- **In general, different services (with different QoS requirements) for one UE are mapped to different transport channels**
- **For different transport channels that are scheduled in the same sub-frame**
  - **May have same or different TTIs**
  - **The aim here is <u>different from that offered by the current CCTrCH</u> mechanism in that the mapping of the physical layer bits is done in a non-random fashion during the Physical Channel Segmentation/Mapping steps**
    - There is a one-to-one mapping of the bits from a given transport channel (TB) to the Resource Assignment
    - There is no inter-leaving of the bits between the two transport channels

Channel Multiplexing

- **For a UE in given sub-frame there is a one-to-one correspondence between a transport channel and a Resource Assignment**
  - **Transport channel multiplexing is not supported**
    - Thus a given physical resource assignment cannot contain bits from multiple transport channels
    - Reduces control channel signaling (no need to support TF combinations)
- **But multiple transport channels can be mapped to the same sub-frame**
  - ***This is similar to the case if we were to be able to assign physical shared channels (PHSDSCH) using simultaneous assignments on different HS-SCCHs in case of HSDPA***
- **Multiple transport channels scheduled in one sub-frame are mapped to different Resource Assignments.**
  - **This implies the need for the UE to support multiple HARQ processes in one sub-frame**
  - **The multiple transport channels can be assigned different TTIs**
  - **In case the individual transport channel share the same TTI, HARQ feedback resources may be shared.**

MAC Architecture (NW Downlink)

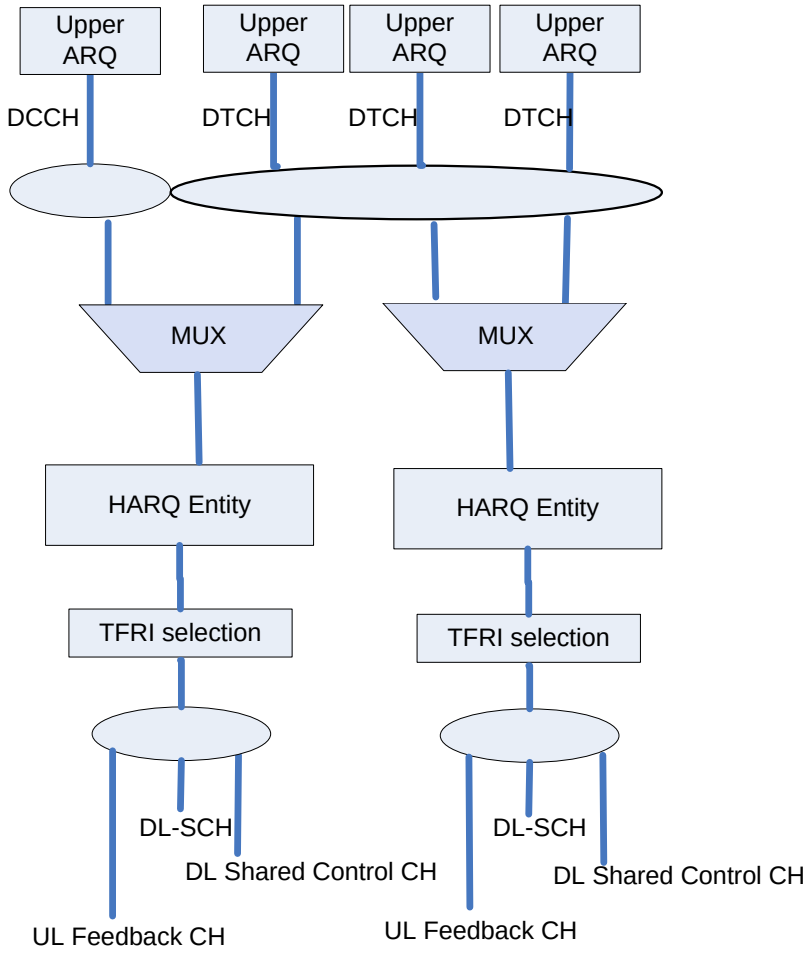

- **Each logical channel has an associated priority**
- **Each logical channel is mapped to one DL-SCH**
- **Many logical channels may be multiplexed onto one DL-SCH**
- **TFRI selection: selection of MCR**

MAC Architecture (UE Downlink)

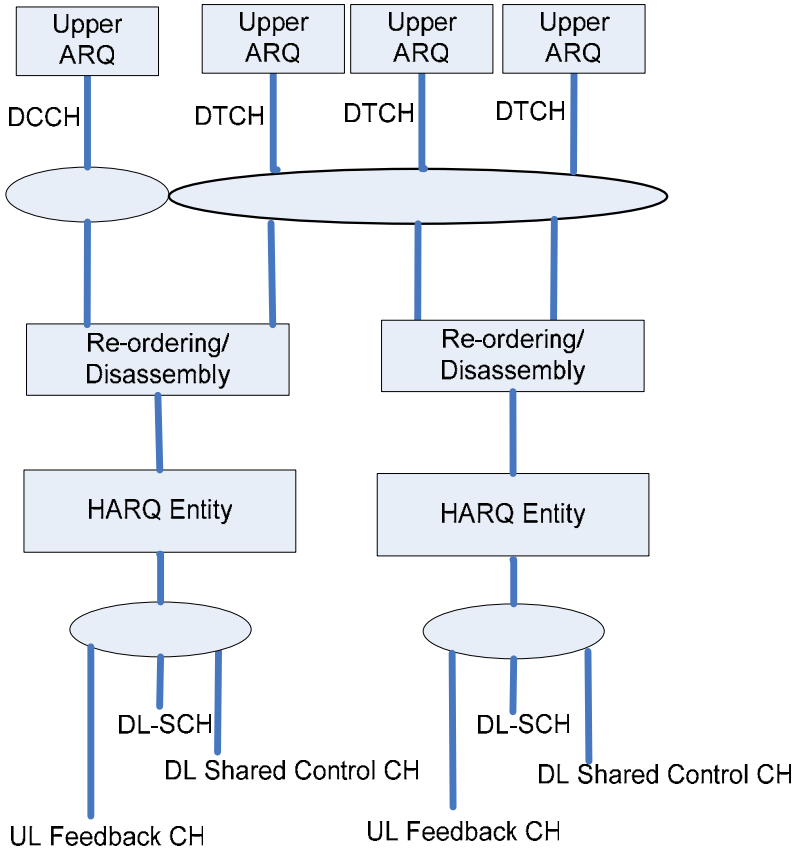

Physical Layer Functions/Models

Functions of Physical Layer

Not very different from current functional description

- ***Differences in macro-diversity support and transport channel multiplexing***

- **FEC encoding/decoding of transport channels**
- **Measurements and indications to higher layers for scheduling (e.g. FER, SIR, interference power, transmission power)**
- **Error Detection on transport channels**
- **Rate matching**
- **Mapping of transport channels on physical channels**
- **Frequency and time synchronization**
- **Timing Advance of Uplink channels**
- **RF processing**
- ***Power weighting of physical channels***

UE DL Physical Layer Model-1

- **This model applies in case:**
  - **Transport block is split into two sub-blocks sharing one CRC, and a different MCR combination is applied to each sub-block**
  - **MAC PDU is split into two transport blocks and to each TB, a seprate CRC applied and a different MCR combination are applied**
- **The different physical steams carry coded bits from different Resource Assignments in the TTI**

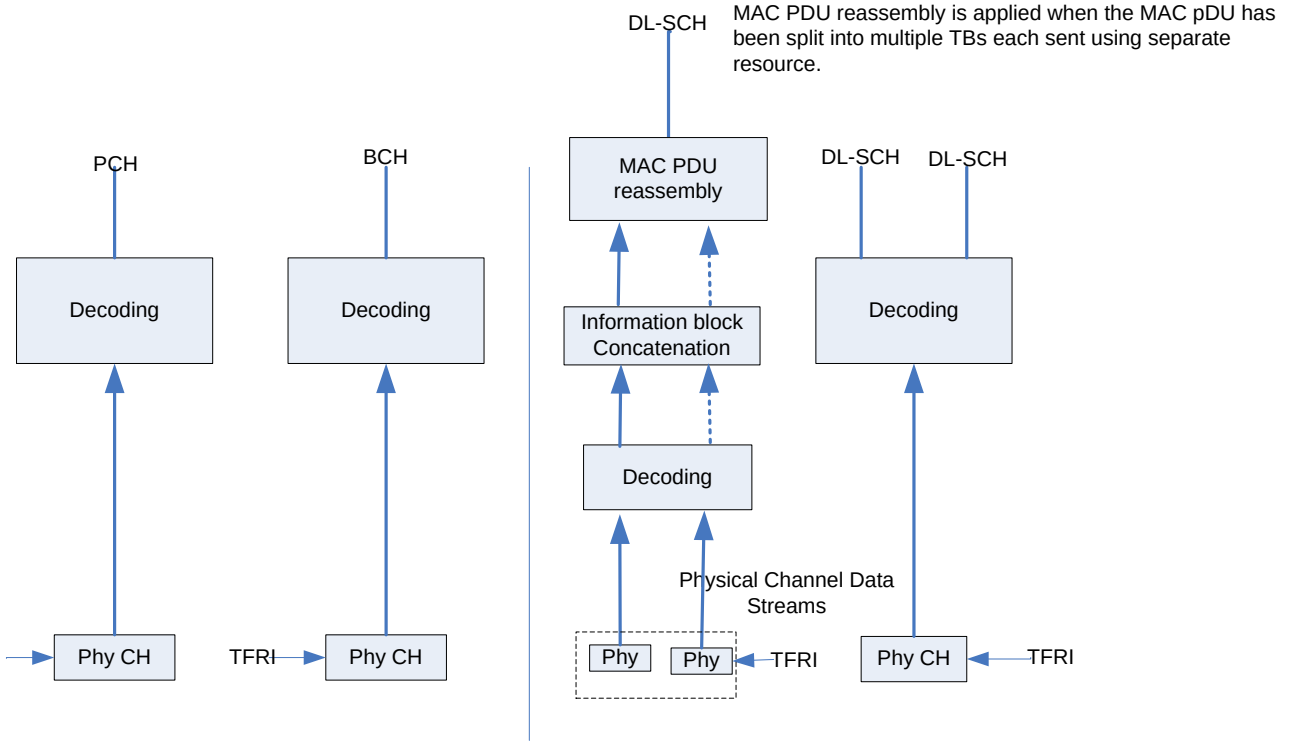

Information Block concatenation is required in case the separate physical streams each carry fragments of a transport block (one CRC). If Information block concatenation is used then MAC PDU reassembly is not required.

UE DL Physical Layer Model-2
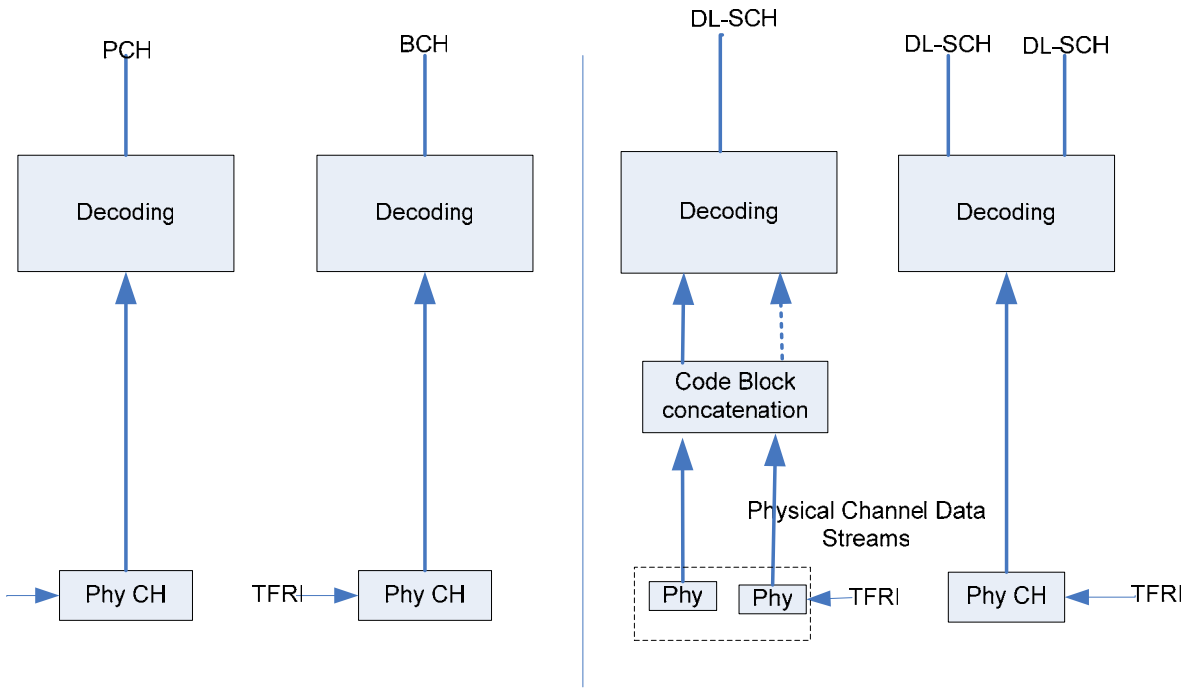
- This model applies when the transport block is coded with one channel coding scheme and the coded bits are allocated to multiple Resource assignments using potentially different modulation schemes.