EVALUATING AND REFINING CALL SETUP DELAY

Chris Johnson*, Balan Muthiah, Phil Pickering***, Chris Haines******

*Christopher.Johnson@nokia.com, Network Performance Services, Nokia UK
**Balan.Muthiah@three.co.uk, RF and Optimisation Strategy, 3 UK
***Phil.Pickering@nokia.com, Network Performance Services, Nokia UK
****Chris.Haines@three.co.uk, RF and Optimisation Strategy, 3 UK

Keywords: Call Setup, Delay, WCDMA.

Abstract

The speech service call establishment procedure uses a combination of signalling protocols. This paper describes the messages associated with these signalling protocols and identifies the relationship between them. RNC databuild parameters related to call setup are identified and discussed. A set of measurements are used to illustrate the dominant phases of speech call establishment. The dominant phases are discussed in terms of reducing call setup delay while minimising the impact upon other aspects of system design. The paper concludes by suggesting a number of ways in which call set-up delay can be refined.

1 Introduction

Call setup delay has a significant impact upon end-user experience and the perception of system performance. GSM system performance defines initial expectations and provides a benchmark from which the WCDMA system must improve. The overall delay associated with establishing an active end-to-end service connection can be divided into a set of distinct phases. The precise set of phases depends upon the type of service connection being established. It also depends upon the initial state of the terminal and whether or not it already has an RRC connection. Call establishment may also include mobility management procedures, e.g. a location area update. All connection establishment procedures from idle mode start with a random access phase during which the UE establishes an RRC connection using a three-way handshake on the PRACH, S-CCPCH and DPCH physical channels. Each of these physical channels must be capable of providing reliable signalling. Some messages are relatively large and do not use layer 2 re-transmissions. In this case single transport block errors necessitate re-transmission of the entire message from layer 3 and thus introduce relatively significant delays. Once an RRC connection has been established the main delays are associated with call control signalling and the RAB establishment procedure.

Call set-up delay can be affected by the radio network plan, by the RNC databuild and by the system design. If the radio network plan includes areas of poor coverage then there is an increased probability of requiring layer 2 and layer 3 re-transmissions. An example of a parameter from the RNC databuild which can have a significant impact upon call setup delay is T300. This is a 3GPP specified parameter which defines the delay between successive re-transmissions of the RRC Connection Request message. If this parameter is configured with a low value then the delay between successive attempts is reduced but the correlation of the radio conditions between those attempts is increased. This means that if one attempt has failed then there is an increased probability that the next attempt will also fail. System design defines characteristics such as the signalling radio bearer bit rate. Assigning a high bit rate to the signalling radio bearer increases the rate at which the signalling procedures can be completed but also places a greater requirement upon coverage and Iub transmission resources.

This paper focuses upon the mobile originated speech service. A similar analysis could be completed for the mobile terminated speech service as well as for data services.

2 Call Establishment Signalling

The RNC and UE signal to one another using the RRC protocol specified by 3GPP in technical specification [1]. The RNC and Node B signal to one another using the NBAP, Frame Protocol and ALCAP signalling protocols specified by 3GPP in technical specifications [2], [3] and by the ITU in recommendation [4]. The RNC and core network signal to one another using the RANAP and ALCAP protocols. The RANAP protocol is specified by 3GPP in technical specification [5]. The UE and core network signal to each other using a combination of the RRC and RANAP protocols. For example, the RRC protocol is used to encapsulate uplink messages which are directed towards the core network. The RNC receives the RRC message and extracts the core network message. The RNC then encapsulates the core network message within a RANAP message before forwarding it across the Iu interface.

A detailed analysis of call setup delay requires an understanding of the signalling completed by each protocol. Consider a UE which has registered with the network but is in RRC idle mode. The first phase of a mobile originated speech call is to establish an RRC connection with the RNC. From the UE perspective, RRC connection establishment involves three RRC messages and air-interface synchronisation. From the network perspective, RRC establishment involves RRC, NBAP, ALCAP and frame protocol signalling as well as air-interface and Iub synchronisation. The signalling used to establish an RRC connection is presented in Figure 1.

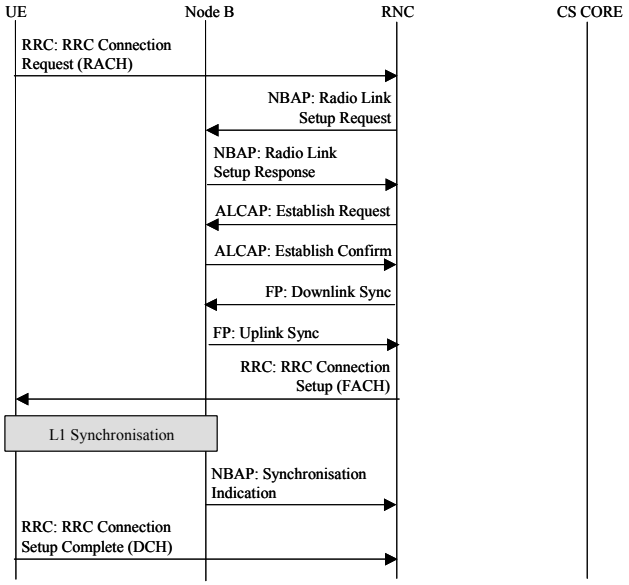

Figure 1: RRC connection establishment signalling

The UE sends an RRC Connection Request message to the RNC using the RACH transport channel which is encapsulated by the PRACH physical channel. Transmission on the PRACH physical channel must be preceded by the transmission of uplink PRACH power control preambles and their subsequent acknowledgement by the Node B. If the UE is located in an area of relatively poor coverage the Node B may not acknowledge the preambles. This necessitates the use of multiple preamble cycles and delays the overall call establishment procedure. Once the PRACH power control preambles have been acknowledged the RRC Connection Request message can be transmitted. The RRC Connection Request message is relatively small and requires only a single transport block. This transport block is typically 168 bits and is transmitted using a 20 ms transmission time interval (TTI) and transparent mode RLC. If the UE is in an area of poor uplink coverage then it is possible that the RNC does not receive the RRC Connection Request message and does not send a response. In this case the UE is able to re-transmit the message from layer 3. This tends to be a relatively slow re-transmission procedure and can have a significant impact upon the call setup delay. 3GPP specifies the parameter T300 to define the period between re-transmissions and the parameter N300 to define the maximum allowed number of re-transmissions. Typical values for T300 and N300 are 2 s and 3 respectively. Re-transmission of the RRC Connection Request message can cause the call setup delay to increase by more than a factor of two when a UE is in an area of poor coverage.

Assuming that the RNC receives the RRC Connection Request message then it uses NBAP signalling to request a radio link at the relevant Node B. The Node B starts to transmit a DPCCH for the new radio link. The transmit power is defined by a downlink open loop power control calculation. This radio link will provide the physical channel across the air-interface for the majority of the call establishment procedure. The RNC then reserves an associated set of Iub transmission resources using the ALCAP Establish Request and Establish Confirm messages. The dedicated channel frame protocol is used to achieve synchronisation across the Iub interface. This allows the RNC and Node B to apply appropriate timing when sending transport blocks to one another. Figure 1 illustrates a single pair of downlink and uplink synchronisation frames although it is usual to achieve synchronisation using two pairs of synchronisation frames. The first pair identifies the round trip time while the second pair compensates for the round trip time and achieves synchronisation.

The RNC responds to the UE's RRC Connection Request message using an RRC Connection Setup message. This message is transmitted using the FACH transport channel which is encapsulated by the S-CCPCH. The RRC Connection Setup message is relatively large and typically requires seven transport blocks. These transport blocks have a size of 168 bits and are transmitted using a 10 ms TTI and unacknowledged mode RLC. The transport block set size is typically defined such that a maximum of two transport blocks can be sent per 10 ms TTI. If the UE is in an area of poor downlink coverage then it is possible that it does not receive one or more of the RRC Connection Setup message transport blocks. In this case the RNC is required to re-transmit the complete set of transport blocks from layer 3. Similar to re-transmission of the RRC Connection Request message this tends to be a relatively slow re-transmission procedure. The parameters defining re-transmission of the RRC Connection Request message are not specified by 3GPP. However the RNC databuild may include implementation dependent parameters defining the period between re-transmissions and the maximum allowed number of re-transmissions.

Once the UE has received the RRC Connection Setup message it attempts to achieve air-interface synchronisation using the DPCCH being transmitted by the Node B. If the downlink open loop power control calculation resulted in a relatively low power then the UE will experience greater difficulty when attempting to synchronise. The rate at which a UE achieves air-interface synchronisation also depends upon the 3GPP specified parameters T312 and N312. Layer 1 of the UE must generate N312 in-sync primitives within a time period defined by T312. The UE evaluates whether or not an in-sync primitive should be generated every 10 ms. A typical value for N312 is 10 and a typical value for T312 is 6 s. T312 is started at layer 3 when a UE initiates the procedure for dedicated channel establishment. Once the UE achieves air-interface synchronisation then it starts to transmit the uplink DPCCH. This allows the Node B to achieve air-interface synchronisation. The Node B uses the 3GPP specified N_INSYNC_IND parameter to determine when it has achieved synchronisation. This parameter is used in a similar way to N312, i.e. it defines the number of in-sync primitives required for synchronisation.

Once the Node B has achieved air-interface synchronisation then it informs the RNC using an NBAP Synchronisation

Indication message. Meanwhile, the UE responds to the RRC Connection Setup message using an RRC Connection Setup Complete message. This message typically requires two 148 bit transport blocks. The TTI depends upon the bit rate of the dedicated channel which has just been established. It is common to use either a 10 ms or 40 ms TTI which leads to either a 14.8 kbps or 3.7 kbps dedicated channel bit rate (a single transport block is transmitted within each TTI). The RNC databuild typically includes a parameter to define the choice of bit rate. The 14.8 kbps bit rate allows the transport blocks to be transmitted at four times the rate and thus reduces the call setup delay. However it also has a greater coverage requirement and a greater Iub transmission resource requirement. If the 14.8 kbps signalling bit rate is used then the bit rate is reduced to 3.7 kbps when the speech bearer becomes active. The RRC Connection Setup Complete message is transmitted using acknowledged mode RLC and so any necessary re-transmissions can be completed relatively rapidly at layer 2. At this stage the UE has established an RRC connection with a dedicated channel which is able to encapsulate a signalling radio bearer to and from the RNC.

The second phase of a mobile originated speech call involves call control signalling with the core network. This signalling is illustrated in Figure 2.

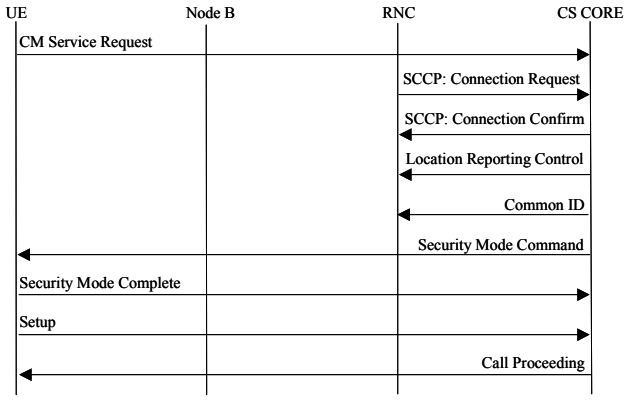

Figure 2: Initial core network signalling

The UE sends a CM service request message to the circuit switched core network via the RNC. The CM service request message is sent to the RNC using an RRC Initial Direct Transfer message. This and all subsequent RRC signalling is transmitted using acknowledged mode RLC. The RNC relays the contents of the Initial Direct Transfer message to the core network using a RANAP Initial UE Message. The RANAP message is combined with an SCCP Connection Request message which is used to request Iu signalling resources. The core network replies with a connection confirm message to acknowledge that a signalling connection has been established across the Iu. The core network then sends Location Reporting Control and Common ID messages to the UE. Once these have been sent the core network completes the Security Mode procedure. There may also be a requirement to complete the Authentication procedure. The UE then sends the Setup message which includes the telephone number which has been dialled. The core network responds with the Call Proceeding message. The delay associated with the second phase of signalling is dependent upon the dedicated channel bit rate across the air-interface, the number of layer 2 re-transmissions required between the UE and RNC, the processing delays of the UE, RNC and core network and whether or not the authentication procedure is required.

The third phase of a mobile originated speech call is involves RAB assignment. The signalling required for RAB assignment is illustrated in Figure 3.

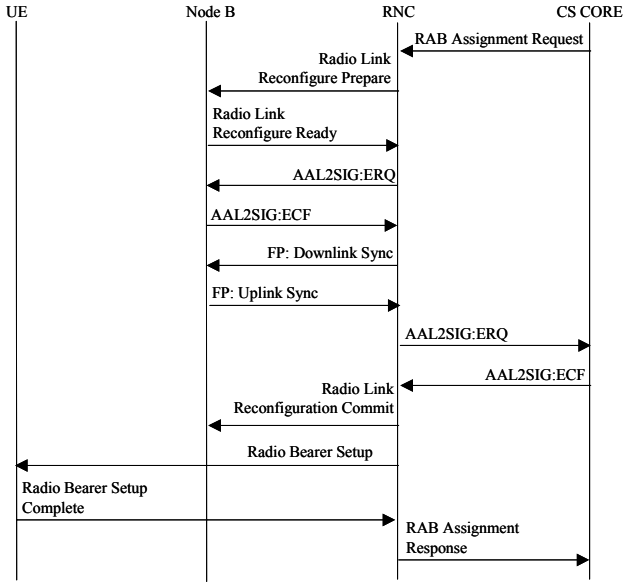

Figure 3: RAB assignment signalling

The core network starts the procedure by sending a RANAP RAB Assignment Request to the RNC. The RNC uses its admission control functionality to determine whether or not the request should be accepted. Assuming the capacity request is accepted, the RNC sends an NBAP Radio Link Reconfiguration Prepare message to the Node B. This message informs the Node B of how its existing radio link will need to be reconfigured to be capable of supporting the speech service. If the 14.8 kbps signalling bit rate is used, the Radio Link Reconfiguration Prepare message also informs the Node B of how this bit rate will have to be reduced when the speech bearer becomes active. The Node B responds with the NBAP Radio Link Reconfiguration Ready message but without yet applying the reconfiguration. A second set of Iub resources are reserved by the RNC using the same approach as during the first phase of signalling, i.e. using ALCAP Establish Request and Establish Confirm messages followed by dedicated channel frame protocol synchronisation messages. The RNC then reserves resources for the speech connection across the Iu interface using a further set of ALCAP messages. Once the Iu resources have been successfully reserved, the RNC sends the NBAP Radio Link Reconfiguration Commit message to the Node B. This message informs the Node B of the connection frame number (CFN) during which it must start to apply the radio link configuration which includes the speech bearer. The CFN

must be defined such that the UE is able to apply the new configuration at the same time as the Node B. The UE is informed of the CFN within the subsequent Radio Bearer Setup message. This means that the CFN must be defined such that it occurs after the UE has received the Radio Bearer Setup message. If it is defined to be significantly after the Radio Bearer Setup message then it has a corresponding impact upon the call setup delay. The value of the CFN should thus be a function of the signalling bearer bit rate. The Radio Bearer Setup message typically occupies 7 transport blocks. If the 14.8 kbps signalling bit rate is used then these 7 transport blocks are sent in 70 ms. If the 3.7 kbps signalling bit rate is used then these 7 transport blocks are sent in 280 ms. This means that the CFN should be 21 frames greater if the 3.7 kbps signalling bit rate is used. Margin should also be allowed for layer 2 re-transmissions and processing time. It is common for the RNC databuild to include a parameter which defines a configurable time offset for the CFN. The Radio Bearer Setup message also informs the UE of the physical channel, transport channel and logical channel configurations to apply during the CFN that the speech bearer becomes active.

Once the CFN occurs and the new configuration has become active, the UE responds with the Radio Bearer Setup Complete message. This message and all subsequent signalling messages are transmitted across the air-interface using the 3.7 kbps bit rate even if the 14.8 kbps bit rate was applied previously. The RNC informs the core network that the radio bearer is active using the RAB Assignment Response message. At this stage the UE has established a radio link to the Node B, a radio bearer to the RNC and a radio access bearer to the core network. The speech bearer is now ready for connection to the number which was dialled.

The forth phase of a mobile originated speech call results in the call being established. Figure 4 illustrates the associated call control signalling.

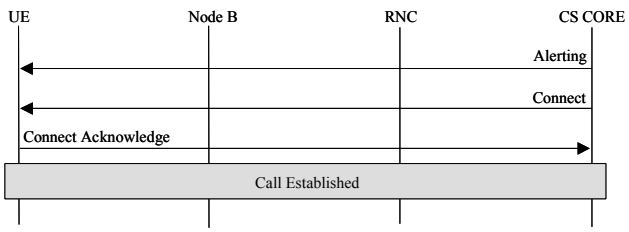

Figure 4: RAB assignment signalling

The core network sends the Alerting message to indicate that the dialled number is being informed of the speech call. Once the dialled number answers then the core network sends the Connect message which is acknowledged by the Connect Acknowledge message. At this stage the speech call has been successfully established.

3 Example Call Setup Delays

The most common approach to measuring call setup delay is to record the time difference between the first uplink RRC Connection Request message and the downlink Alerting message. The delay should be measured from UE log files rather than from network log files although the network allows a more detailed analysis. Table 1 presents an example of the speech service call setup delay recorded by a UE which used a 3.7 kbps signalling bearer.

	Incremental	Cumulative
RRC Connection Request	0 ms	0 ms
RRC Connection Setup	401 ms	401 ms
RRC Connection Setup Complete	40 ms	441 ms
CM Service Request	460 ms	901 ms
Security Mode Command	361 ms	1262 ms
Security Mode Complete	1 ms	1263 ms
Setup	249 ms	1512 ms
Call Proceeding	311 ms	1823 ms
Radio Bearer Setup	481 ms	2304 ms
Radio Bearer Setup Complete	250 ms	2554 ms
Measurement Control	495 ms	3049 ms
Alerting	96 ms	3145 ms

Table 1: Example speech service call setup delay recorded by a UE (3.7 kbps signalling bearer)

This example was recorded in an area of good coverage. This means that there was not a requirement for re-transmissions at layer 2 nor at layer 3. In addition, this example did not require the Authentication procedure which typically increases the call setup delay by 600 ms.

The RRC connection was established after 441 ms. There was a 401 ms delay between the UE sending the RRC Connection Request message and receiving the RRC Connection Setup message. This delay includes the uplink and downlink round trip time to the RNC as well as the time required to configure a radio link at the Node B and to reserve the signalling bearer's Iub transmission resources.

The UE introduces a relatively significant delay of 460 ms between sending the RRC Connection Setup Complete message and sending the CM Service request message. The UE also introduces a relatively significant delay of 249 ms between sending the Security Mode Complete message and sending the Setup message. These delays are likely to be UE implementation dependent. The UE is able to react to the Security Mode Command message very rapidly and responds with only 1 ms of delay.

The delay between the Call Proceeding message and the Radio Bearer Setup message during which the RNC re-configures the radio link and reserves additional Iub transmission resources is comparable to the RRC connection delay during which time a similar set of procedures were completed.

The delay between the Radio Bearer Setup message and the Radio Bearer Setup Complete message reflects the value of the CFN provided in the Radio Link Reconfiguration Commit and Radio Bearer Setup messages. In this example there appears to be a reasonable quantity of margin in the CFN. It may be necessary to have this margin to account for call establishment in poor coverage.

There is a relatively significant delay between the UE sending the Radio Bearer Setup message and the core network responding with the Alerting message. This includes the round trip time to the core network as well as RNC and core network processing delays.

Table 2 presents the call setup delay extracted from a network log for the same call as that presented in Table 1.

	Incremental	Cumulative
RRC Connection Request	0 ms	0 ms
NBAP Radio Link Setup	32 ms	32 ms
NBAP Radio Link Setup Response	28 ms	60 ms
ALCAP ERQ	43 ms	103 ms
ALCAP ECF	6 ms	109 ms
FP Downlink Sync. (first)	11 ms	120 ms
FP Uplink Sync. (first)	6 ms	126 ms
RRC Connection Setup	51 ms	177 ms
FP Downlink Sync. (second)	15 ms	192 ms
FP Uplink Sync. (second)	8 ms	200 ms
NBAP Synchronisation Indication	264 ms	464 ms
RRC Connection Setup Complete	199 ms	663 ms
CM Service Request	241 ms	904 ms
Security Mode Command	128 ms	1032 ms
Security Mode Complete	232 ms	1264 ms
Setup	240 ms	1504 ms
Call Proceeding	89 ms	1593 ms
Radio Link Reconf. Prepare	6 ms	1599 ms
Radio Link Reconf. Ready	32 ms	1631 ms
ALCAP ERQ	46 ms	1677 ms
ALCAP ECF	6 ms	1683 ms
Radio Link Reconf. Commit	120 ms	1803 ms
FP Downlink Sync. (first)	2 ms	1805 ms
FP Uplink Sync. (first)	7 ms	1812 ms
FP Downlink Sync. (second)	21 ms	1833 ms
FP Uplink Sync. (second)	7 ms	1840 ms
Radio Bearer Setup	233 ms	2073 ms
Radio Bearer Setup Complete	631 ms	2704 ms
Measurement Control	209 ms	2913 ms
Alerting	40 ms	2953 ms

Table 2: Example speech service call setup delay recorded by the network (3.7 kbps signalling bearer)

The overall call setup delay is shorter when recorded from the network. It excludes the uplink RAN delay associated with the RRC Connection Request message and the downlink RAN delay associated with the Alerting message. The figures in Table 2 illustrate that the dominant part of RRC connection establishment is the synchronisation across the air-interface. The delay between the Security Mode Command message and the Security Mode Complete message provides an indication of the RAN round trip time due to the associated UE processing time being very short.

4 Reducing Call Setup Delay

Achieving a reduced call setup delay across the network can be achieved by improving coverage and reducing the requirement for layer 2 and layer 2 re-transmissions. In addition, the RNC databuild should be refined using for example the parameters T300, N300, N312 and the time offset for the CFN during which the speech bearer becomes active. These parameters should be tuned for areas of poor coverage as well good coverage. A relatively simple change that can be made to reduce the call setup delay is to change the signalling bearer bit rate from 3.7 kbps to 14.8 kbps. Table 3 presents an example speech service call setup delay recorded by a UE which used a 14.8 kbps signalling bearer.

	Incremental	Cumulative
RRC Connection Request	0 ms	0 ms
RRC Connection Setup	340 ms	340 ms
RRC Connection Setup Complete	100 ms	440 ms
CM Service Request	292 ms	732 ms
Security Mode Command	160 ms	892 ms
Security Mode Complete	1 ms	893 ms
Setup	139 ms	1032 ms
Call Proceeding	150 ms	1182 ms
Radio Bearer Setup	310 ms	1492 ms
Radio Bearer Setup Complete	510 ms	2002 ms
Measurement Control	481 ms	2483 ms
Alerting	40 ms	2523 ms

Table 3: Example speech service call setup delay recorded by a UE (14.8 kbps signalling bearer)

The 14.8 kbps signalling radio bearer is introduced between the RRC Connection Setup Complete and Radio Bearer Setup messages. Comparing the figures with those presented in Table 1 indicates that the call setup delay is reduced by approximately 600 ms. Increasing the signalling bearer bit rate to 14.8 kbps does however require an increase in Iub transmission resources and should be accounted for in the system design.

5 Conclusions

The signalling used to establish a mobile originated speech call has been discussed in terms of call setup delay. An example set of UE and network logs have been used to illustrate the dominant phases of call establishment in good coverage conditions. The UE, RAN and core network delays have been identified. The impact of increasing the signalling bearer bit rate has been shown to be in the order of 600 ms. A well planned radio network as well as a good system design and appropriate RNC databuild are required to achieve reduced call setup delays.

References

[1] 3GPP TS25.331, “Radio Resource Control (RRC) protocol specification”, v3.9.0 (2001-12)

[2] 3GPP TS25.433, “UTRAN Iub Interface NBAP Signalling”, v3.9.0, (2002-03)

[3] 3GPP TS25.427, “UTRAN lub/lur Interface User Plane Protocol for DCH Data Streams”, v3.9.0, (2001-12)

[4] ITU-T Recommendation Q2630.1 “AAL type 2 signalling protocol – Capability set 1”, (1999-12)

[5] 3GPP TS25.413, “UTRAN Iu Interface RANAP Signalling”, v3.9.0, (2002-03)