Recommendations for NR UE Power Saving

A Technical Contribution from MediaTek Inc.

Aug. 2019

Motivation

User experience = key to 5G/NR success

- Mass transition to 5G will be slower if UE battery life expectations are not met
- Users expect better 5G device battery lifetime with 4G-like applications
- NR UE power saving features are essential enablers for the 5G ecosystem

User Experience	Design Aspect
Data Rate	Capacity
Battery Life	UE Power Saving

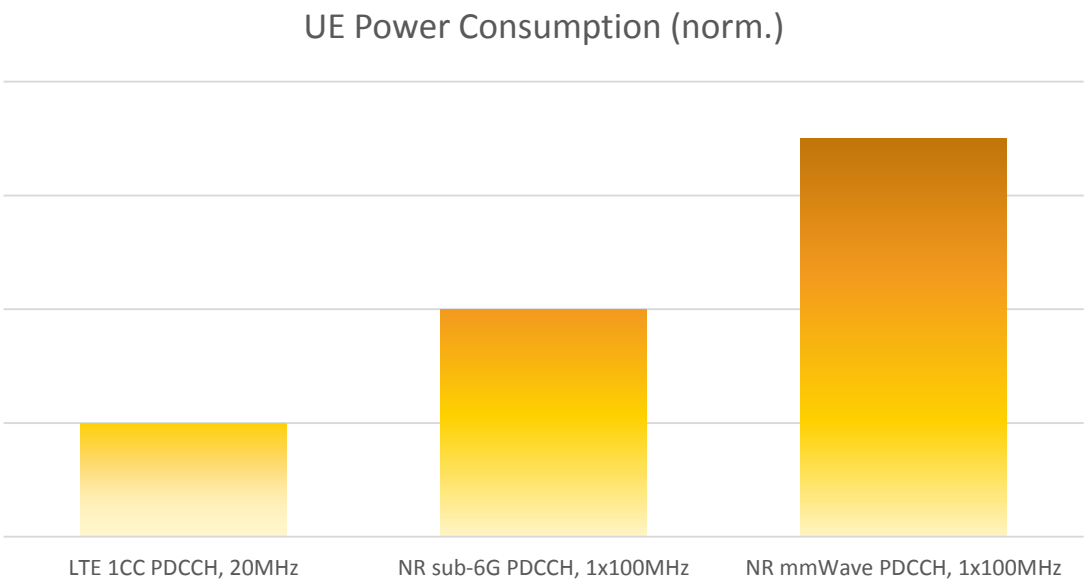

Copyright © MediaTek Inc. All rights reserved.

Outlines

- Observations and Recommendations for cDRX
- Observations and Recommendations for L1-Based Power-Saving Adaptation
- Observations and Recommendations for Idle-Mode Power Consumption
- Additional Recommendation for Rel-16 UE Assistance Information
- Summary

Observations and Recommendation for cDRX

Rel-15 cDRX Optimization (1/2)

- Motivation: Investigate and optimize Rel-15 cDRX for UE power saving in order to benefit all Rel-15 UEs in a timely manner.

- Baseline setting to be optimized:
  - FTP/Video (data rate 20 Mbps): 0.5 MBytes data with mean data inter-arrival time 200 ms; FTP3 model
  - FR1: (DRX cycle, inactivity timer, on-duration) = (160ms, 100ms, 8ms)
  - FR2: (DRX cycle, inactivity timer, on-duration) = (160ms, 40ms, 4ms)

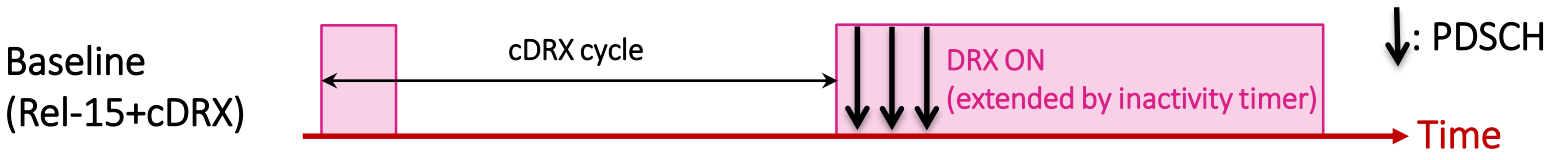

Rel-15 cDRX Optimization (2/2)

- cDRX with long and short cycles: Entering short cycle(s) after a short inactivity timer, instead of using a long inactivity timer

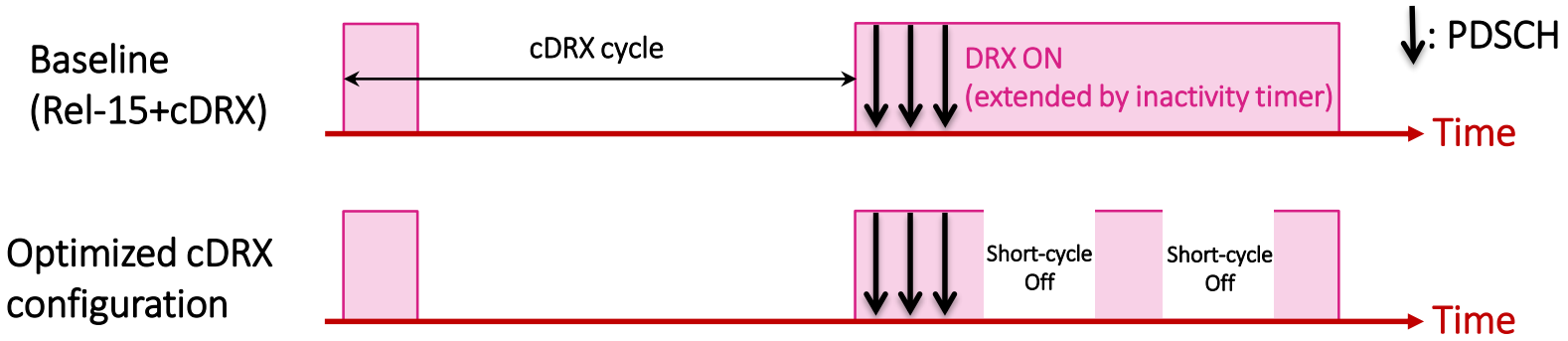

- Significant power saving gain can be achieved (23% - 52%) with optimized cDRX setting:

Frequency range	Total BW/#CC	Latency increment	Power saving gain	Optimized cDRX settings
FR1	100MHz/1CC	1.00 % (+0.6 ms)	23.15 %	• (DRX cycle, inactivity timer, on-duration) = (160ms, 5ms, 8ms) • (short cycle, short cycle timer) = (20ms, 5)
	200MHz/2CC	0.45 % (+0.2 ms)	32.95 %	
FR2	400MHz/4CC	1.44 % (+0.9ms)	47.76 %	• (DRX cycle, inactivity timer, on-duration) = (160ms, 2ms, 4ms) • (short cycle, short cycle timer) = (20ms, 2)
	800MHz/8CC	0.98 % (+0.6ms)	52.57 %	

Rel-16 cDRX Enhancement

- In Rel-16, wake-up signaling/power saving signal is introduced to eliminate DRX on durations without data scheduling
  - Particularly beneficial for power saving over sparse traffic
  - Observed 22% - 33% power saving on top of the optimized Rel-15 cDRX configurations (using short cycles)

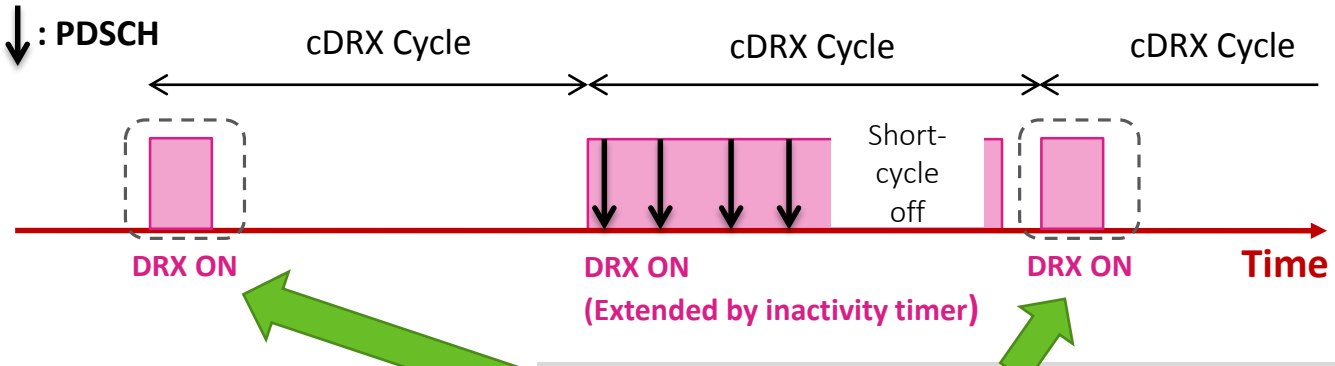

Non-scheduled DRX cycle:
PDCCH monitoring within this period can be eliminated by utilizing power saving signal

Baseline: cDRX with long and short cycles

Traffic type	Frequency range	# of CC	Latency increment	Power saving gain
IM*	FR1	100MHz/1CC	6.18 % (+8.99ms)	22.19 %
		200MHz/2CC	6.22 % (+8.99ms)	28.85 %
	FR2	400MHz/4CC	2.37 % (+3.52ms)	29.63 %
		800MHz/8CC	2.37 % (+3.52ms)	33.33%
Evaluation setting*: FR1/FR2 • (DRX cycle, inactivity timer, on-duration) = (320ms, 5ms/2ms, 10ms/5ms) • (short cycle, short cycle timer) = (20ms, 4/4)				
FTP/Video **	FR1	100MHz/1CC	10.68 % (+6.04ms)	5.59 %
		200MHz/2CC	10.59 % (+5.24ms)	8.87 %
	FR2	400MHz/4CC	3.75 % (+2.45ms)	12.17%
		800MHz/8CC	3.96 % (+2.49ms)	15.95%
Evaluation setting**: FR1/FR2 • (DRX cycle, inactivity timer, on-duration) = (160ms, 5ms/2ms, 8ms/4ms) • (short cycle, short cycle timer) = (20ms, 5/2)				

Observations and Recommendations

- Suggestion on cDRX feature migration:
  - Rel-15: Optimized cDRX configuration with larger DRX long cycle and smaller DRX inactivity timer
    - DRX short cycle feature can be utilized to ensure short DRX inactivity timer
  - Rel-16: Wake-up signaling/power saving signal to eliminate DRX on durations without data scheduling

- Issues for further enhancement:
  - Migration to FR1 200 MHz or FR2 400 MHz will increase ~20% (FR1) or ~50% (FR2) power consumption even with optimized cDRX configuration and power saving signal. **More aggressive Active Time PDCCH monitoring reduction is needed, particularly for FR2**
  - **Wake-up signaling robustness** in FR2 (due to beam change) and NR-U (due to DL LBT failure)

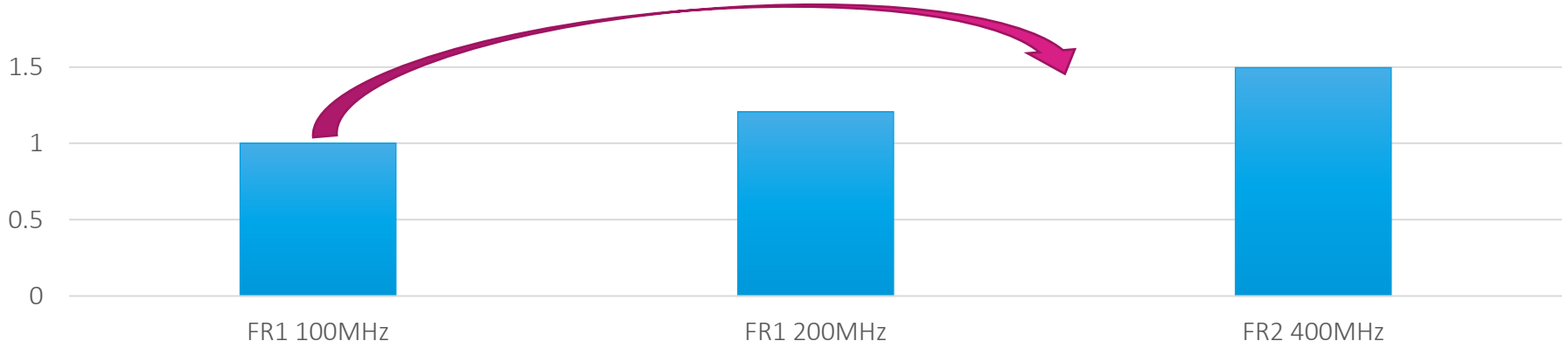

Observations and Recommendations for L1-Based Power-Saving Adaptation

Rel-15 L1-Based Power-Saving Adaptation (1/3)

- In Rel-15, BWP switch framework is introduced:
  - Original intention is to scaling down UE BW for power saving
  - Final framework is flexible to adapt various BWP parameters via RRC/DCI/BWP timer
  - Power saving is possible alternatively by a simple BWP switch adapting PDCCH monitoring periodicity only

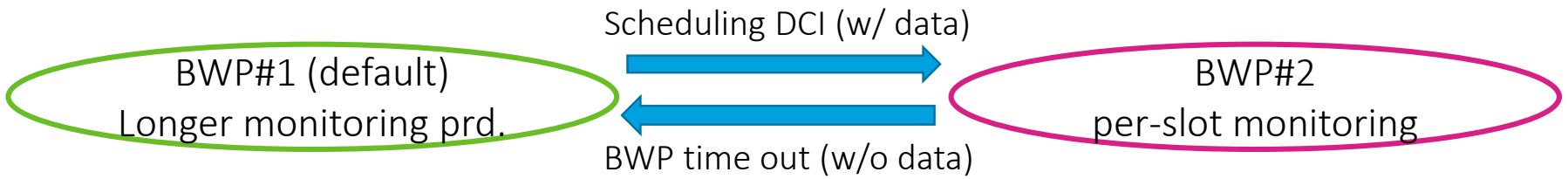

- Baseline settings to test the power saving gain by the above simple BWP switch:
  - FTP/Video (data rate 20 Mbps): 0.5 MBytes data with mean data inter-arrival time 200 ms; FTP3 model
  - FR1: (DRX cycle, inactivity timer, on-duration) = (160ms, 100ms, 8ms)
  - FR2: (DRX cycle, inactivity timer, on-duration) = (160ms, 40ms, 4ms)
  - FR2: (DRX cycle, inactivity timer, on-duration) = (80ms, 8ms, 8ms) → A good cDRX setting with short inactivity timer

Rel-15 L1-Based Power-Saving Adaptation (2/3)

- Simple BWP switch adapting PDCCH monitoring periodicity only: Extend PDCCH monitoring periodicity to 2ms after BWP timer expires (i.e, no data activity); switch back to the BWP with per-slot monitoring when data activity starts
  - Note: 2-ms PDCCH monitoring periodicity is applied to DRX on durations without data activity

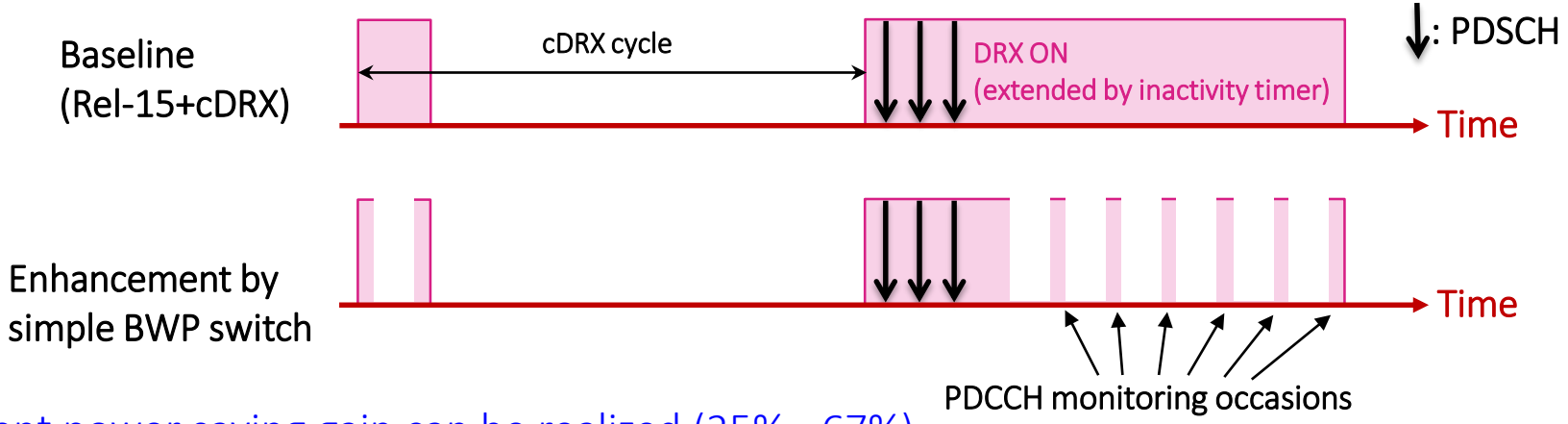

- Very significant power saving gain can be realized (25% - 67%):

Frequency range	Total BW/#CC	Latency increment	Power saving gain	cDRX and BWP switch settings
FR1	100MHz/1CC	8.05 % (+4.5 ms)	25.77 %	• (DRX cycle, inactivity timer, on-duration) = (160ms, 100ms, 8ms) • PDDCH monitoring periodicty (BWP#1, BWP#2) = (4 slots (=2ms), 1 slot); *bwp-InactivityTimer* = 3ms
	200MHz/2CC	7.62 % (+3.8 ms)	41.45 %	
FR2	400MHz/4CC	5.94 % (+3.8 ms)	60.04 %	• (DRX cycle, inactivity timer, on-duration) = (160ms, 40ms, 4ms) • PDDCH monitoring periodicity (BWP#1, BWP#2) = (16 slots (=2ms), 1 slot); *bwp-InactivityTimer* = 2ms
	800MHz/8CC	4.56 % (+2.8 ms)	67.62 %	

Rel-15 L1-Based Power-Saving Adaptation (3/3)

- What if cDRX setting is already optimized (inactivity timer is intentionally set very short)?
  - Applying simple BWP switch to check whether good power saving gain can still be achieved

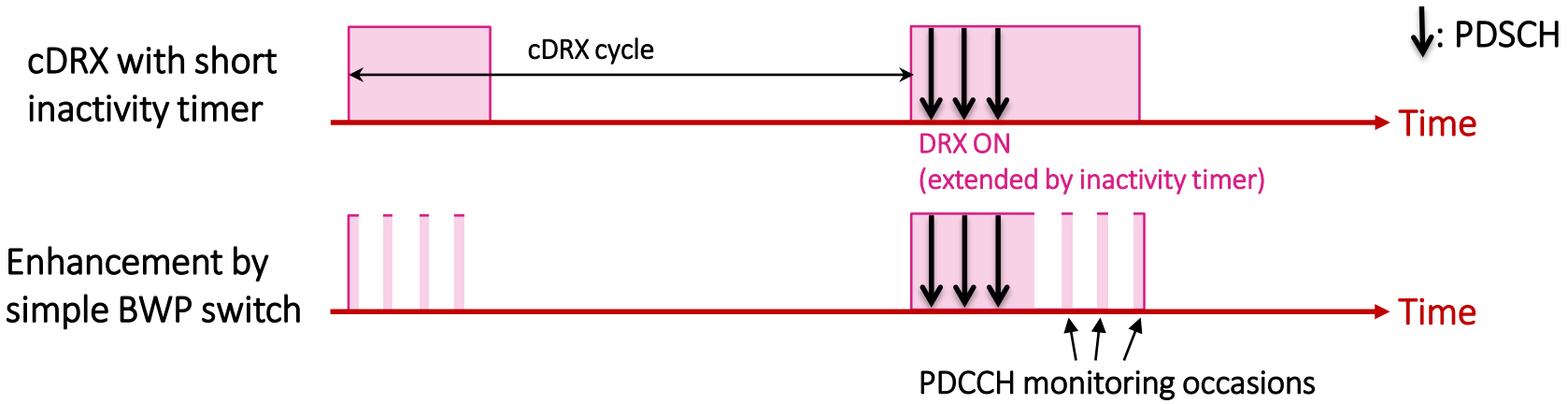

- Significant power saving gains are still observed (47% - 56%)

Frequency range	Total BW/#CC	Latency increment	Power saving gain	cDRX and BWP switch settings
FR2	400MHz/4CC	11.08 % (+4.0 ms)	47.70 %	• (DRX cycle, inactivity timer, on-duration) = (80ms, 8ms, 8ms) → Inactivity timer is already shot • PDDCH monitoring periodicity (BWP#1, BWP#2) = (16 slots (=2ms), 1 slot); *bwp-InactivityTimer* = 2ms
	800MHz/8CC	10.05 % (+3.5 ms)	56.79 %	

Recommendation for Rel-16

- Simple BWP switch, adapting PDCCH monitoring periodicity only, can achieve very significant power saving gain, even with optimized cDRX setting
- **Compared with any new L1-based PDCCH monitoring reduction scheme**, the simple BWP switch requires **the same implementation changes while minimized specification effort**:

PDCCH monitoring reduction scheme	UE requirement	gNodeB requirement	Specification consideration
Rel-15 simple BWP switch (adapting PDCCH monitoring periodicity only)	• Parse DCI for gNode indication • Adjust PDCCH monitoring per gNodeB indication	• Adapt PDSCH scheduling occasion after indicating UE to change PDCCH monitoring	• BWP timer available for reduced signaling overhead • Switch delay defined for UE to leave from a power saving state
Rel-16 new L1-based scheme for PDCCH monitoring reduction			• New indication design needed to avoid signaling overhead when scheduling DCI cannot be used • New delay requirement needed

- **Recommendation**: Rel-16 to allow UEs supporting only specialized BWP switch for power saving purpose (e.g., PDCCH monitoring reduction, MIMO layer adpatation, etc.)

Emerging Demand on L1-Based Power Saving Adaptation

- For lower latency consumer services, e.g., gaming, AR, VR, etc., data inter-arrival time can be very short.
- Example study:
  - Traffic model (FTP3): 0.1 MBytes data with mean data inter-arrival time of 10 ms
  - FR1 200MHz/2CC, 5 UEs (26% RU); with and without cDRX
  - **Observation**: L1-based power saving adaptation achieves better latency and power saving trade-off

Scheme	Latency increment	Power saving gain	Note
(DRX cycle, inactivity timer, on-duration) = (10ms, 3ms, 2ms)	0 % (as ref: 5.53 ms)	0 % (as ref: 109.9 units)	• Optimized cDRX • **Active time >= CSI proc. time necessary**
L1-based scheme #1; no cDRX	**-27.12 % (-1.5 ms)**	2.4 %	Latency prioritized
L1-based scheme #2; no cDRX	3.07 % (+0.2 ms)	**13 %**	Power saving prioritized

- **Recommendation**: Enhancement to L1-based power-saving adaptation for emerging 5G new use cases

Observations and Recommendations for Idle-Mode Power Consumption

Assumption Update for Paging Power Consumption Analysis

- Before paging occasion (PO), two SSB bursts are typically used for intra-frequency measurement and time/frequency sync for paging reception.
- After PO, one SMTC window is typically needed for inter-frequency measurement.
- For inter-frequency measurement, RAN4 do not have any requirement on the timing alignment, so UE needs to receive the whole 5ms SMTC window.

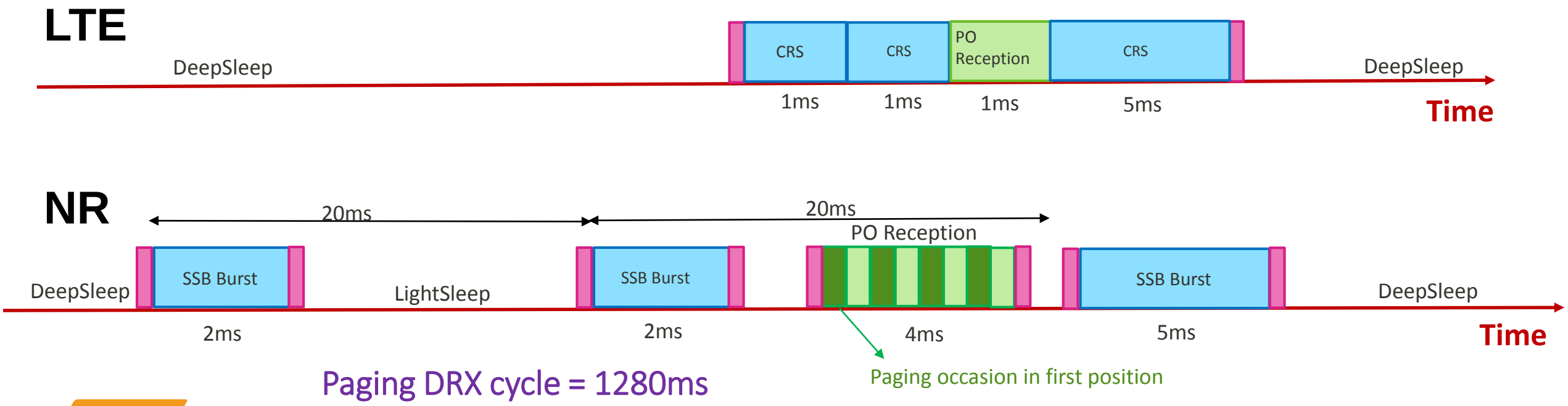

- We also consider one SSB in each SSB burst and variable paging occasion position.

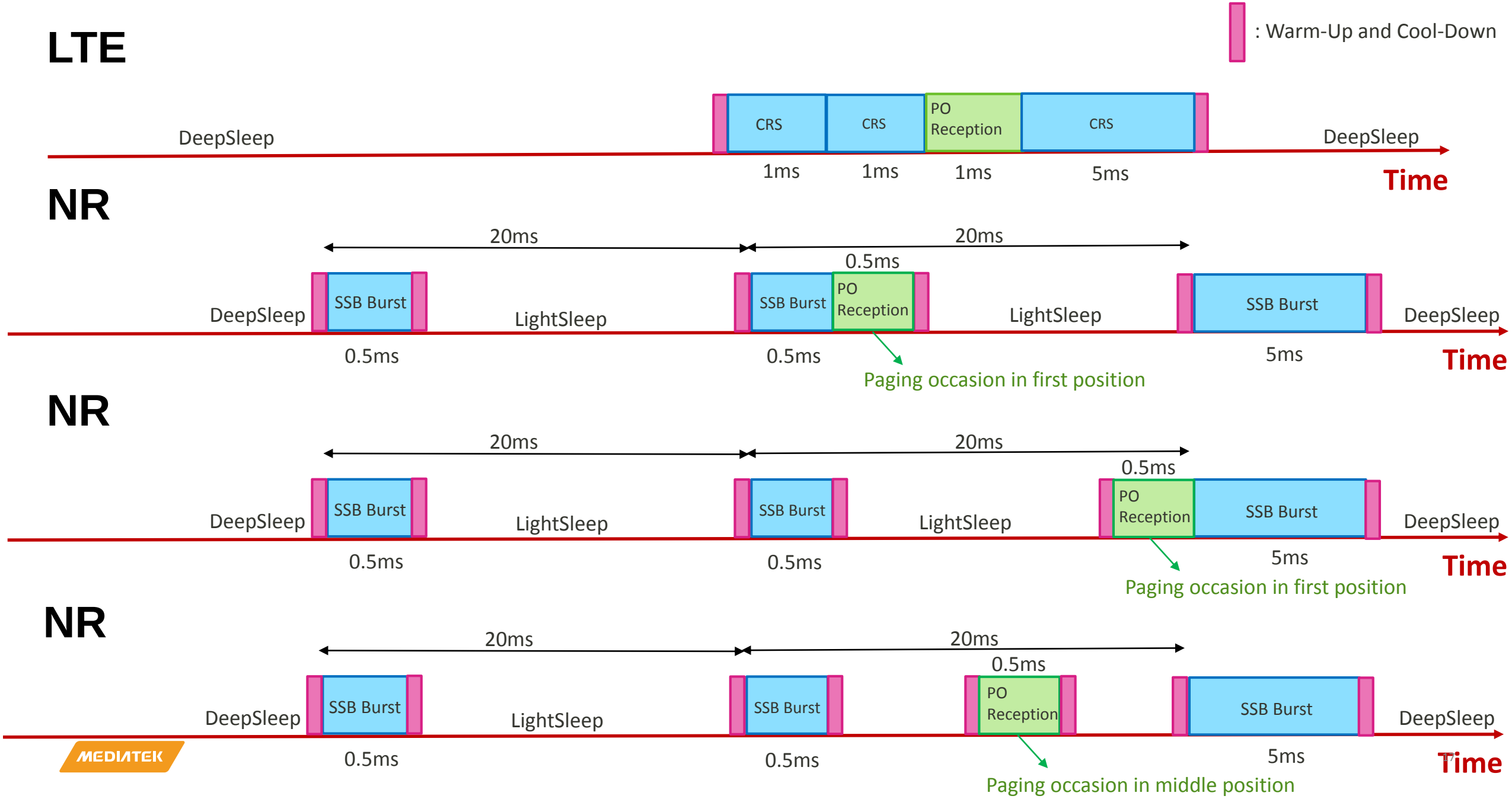

NR Idle Mode **Power Consumption Increment** Compared with LTE

Assumption: 50% of RRM relaxation condition holds

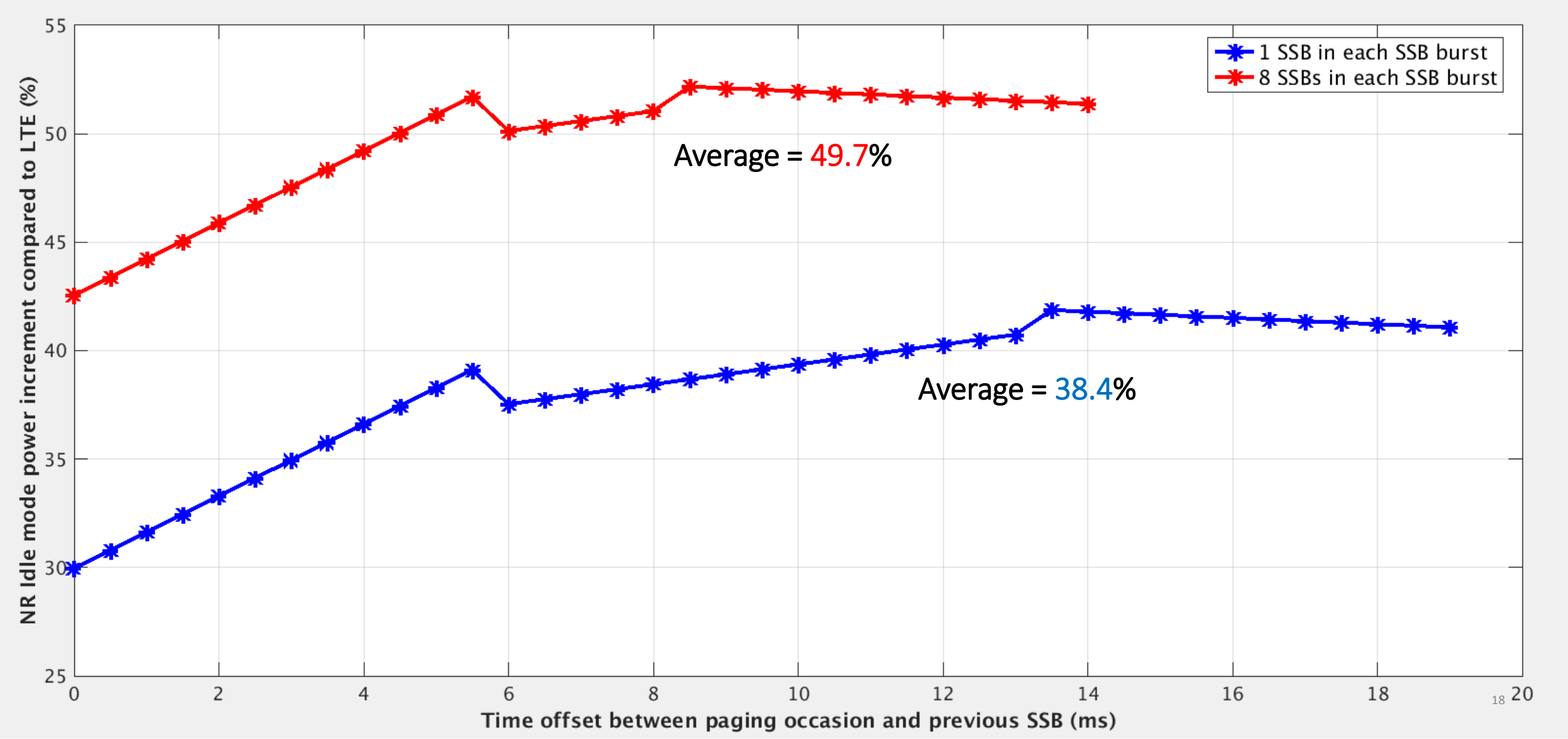

Observations and Recommendations

- Compared with LTE, ~40% to ~50% increment to idle-mode power consumption is observed for NR
  - Correspondingly, more than 30% reduction in idle-mode battery time is expected in NR SA network
- Recommendation for Rel-15/16:
  - Placing PO close to the end of a SSB burst for ~8% of idle-mode power saving
  - Note: Rel-16 is to broaden RRM relaxation condition and increase the average power saving
- Recommendations for potential idle-mode power saving enhancement:
  - Broadcast of potential cell-specific RS information for idle-mode UEs to utilize less SSB bursts
  - Wake-up signaling design for idle-mode paging, to benefit both smartphone and small-form-factor UEs
    - Accommodating **RRM** and **synchronization** functionality to maximize UE power saving gain

Additional Recommendation for Rel-16 UE Assistance Information

UE Processing Timeline Consideration

- Minimum K1/K2=1 (0.5ms@30KHz) can lead to high UE digital baseband power consumption
  - Average latency reduction is not very significant
- **Recommendation**: Allow UE to suggest K1 and K2 values (for user applications with moderate latency requirements)

UE Type	Minimum K1/K2 Settings	Average K1/K2 latency (ms)		Note
		UDC Pattern (DDDSUDDSUU)	UDC Pattern (DDDDDDDSUU)	
Low-Latency	K1 = 1 K2 = 1	K1 = 1.14ms K2 = 0.67ms	K1 = 2.25ms K2 = 0.75ms	N/A
Normal	K1 >= 3 K2 >= 2	K1 = 2.21ms K2= 1ms	K1 = 2.94ms K2= 1ms	A-SRS offset also >= 2 slots

K1-IE: *PUCCH-Config/dl-DataToUL-ACK*
K2-IE: *PUSCH-TimeDomainResourceAllocation/K2*

UDC: (DDDSU+DDSUU)

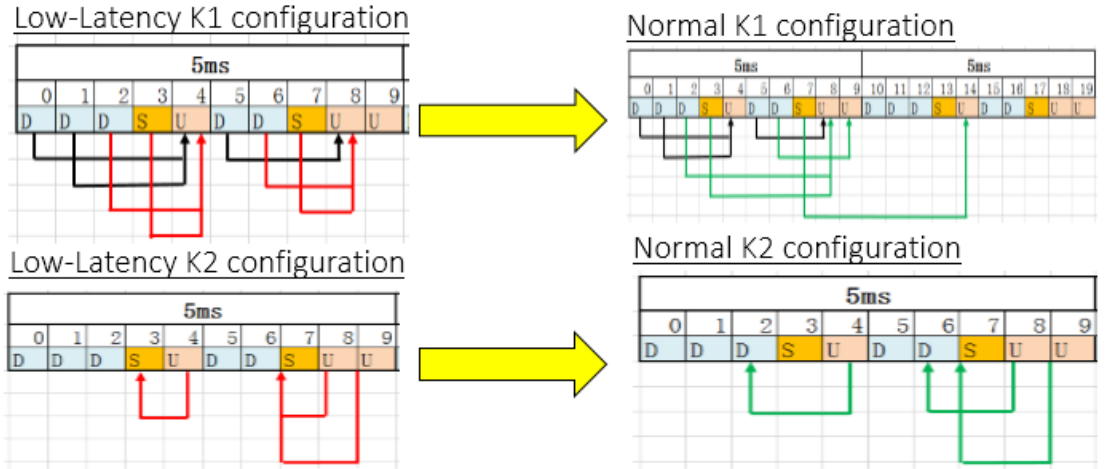

UDC: (DDDDDDDSUU)

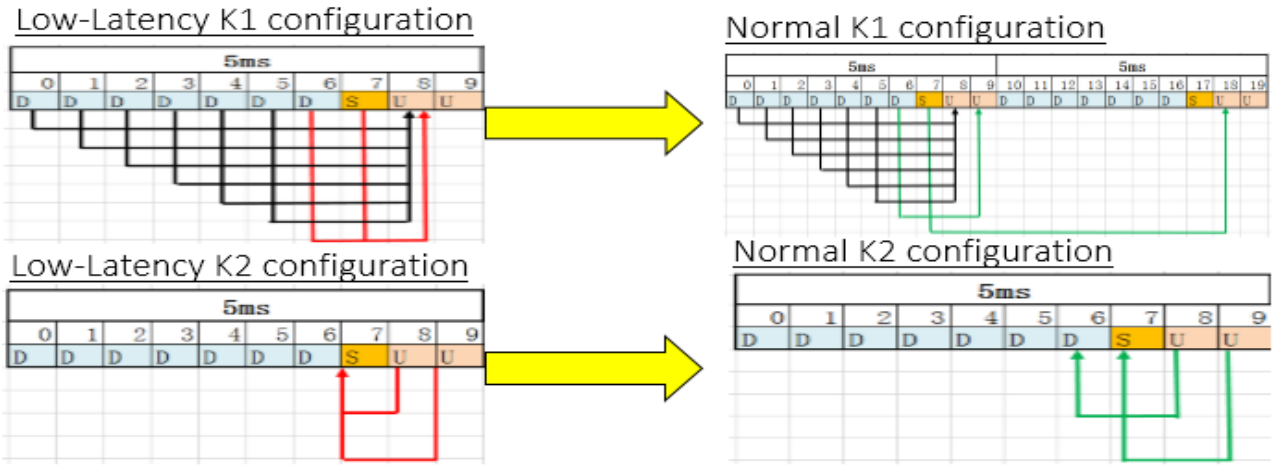

Summary

Potential Power Saving Feature Migration Paths

Mechanism	Rel-15	Rel-16	Rel-17
cDRX	- Power saving baseline - Long/short cycle adaptation to replace a long inactivity timer	- Wake-up signaling/power saving signal introduced to further reduce DRX on durations without data scheduling	- Enhancements for FR2 and wake-up signaling robustness

Fast L1 adaptation	- DCI/timer-based adaptation by BWP framework: UE BW and/or PDCCH monitoring periodicity	- BWP framework extension:
		  - Adaptation to maximum #MIMO layers via BWP switch
		  - Adaptation to SCell dormancy behavior via BWP switch
		  - Existing SCell dormancy behavior by new PCell indication (TBD)
		  - Adaptation to cross-slot scheduling for an active BWP, reducing #BWP for adaptation
			- Enhancement for emerging 5G new use cases of lower latency requirements

SCell adaptation	- MAC CE based SCell activation/deactivation introduced in Rel-15		
Cross-slot scheduling	- Power-efficient K0/K1/K2 setting		
Idle-mode power saving	- S-measure criterion	- RRM relaxation	- Enhancement for idle paging power saving
UE assisted information	- N/A	- UE feedback to be selected by RAN2: PPI, cDRX setting, SCell configurations - More to consider: K1/K2 (UE proc. timeline)	- Enhancement for network power saving

MEDIATEK

Welcome Your Valuable Suggestions and Discussions !

Appendix – Simulation Settings

Simulation parameters	FR1	FR2
Carrier center frequency	4 GHz	30 GHz
Subcarrier spacing	30 kHz	120 kHz
Bandwidth (per CC)	100MHz	100MHz
# of CC	1, 2	4, 8
Channel model	IMT2020 3D UMa	IMT2020 3D UMa
Deployment	Dense Urban	Dense Urban
ISD	200 m	200 m
# of BS Tx antennas	32; (M, N, P, Mg, Ng) = (8, 8, 2, 1, 1)	2
# of UE Rx antennas	4	2
MIMO scheme	SU-MIMO	SU-MIMO
Max. # of HARQ RETX	4	4
# of UEs/Cell	FTP/Video: 10 UEs IM: 40 UEs	FTP/Video: 10 UEs IM: 40 UEs

	FTP/Video	IM
Model	FTP model 3	FTP model 3
Data size	0.5 Mbytes	0.1 Mbytes
Mean data inter-arrival time	200 ms	2 sec