R1-062072 Uplink Reference Signal Multiplexing Structures for E-UTRA

Agenda Item: 8.4.2

Two major issues

- **What is minimum RS BW, and how many uplink RS sequences are required between cells?**
  - **Primary driver for considering CDM is GCL/CAZAC sequence length**
  - **RB size places fundamental limit on sequence length**
    - 25sc RB → length 12 sequence, 12 sequences available
    - 12sc RB → length 6 sequence, 6 sequence available
    - From Motorola R1-061720, 12 sequences may be enough …

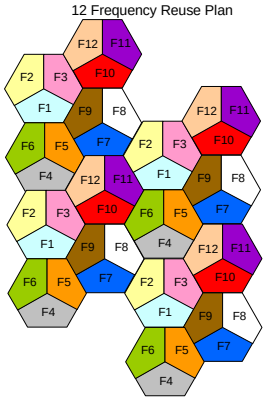

- **How will sounding RS be supported in addition to data demodulation RS?**
  - **Should the design have no sounding overhead if sounding is not used? (the primary mode of operation varies between different companies)**
  - **Options include**
    - No channel dependent scheduling (no sounding)
    - Selective use of an LB if sounding desired
    - Sounding multiplexed separately (e.g., via FDM) on one or both short blocks
    - Sounding multiplexed together (e.g., via CDM) on one or both short blocks
    - Scanning of sounding RS to enable broadband sounding
- **It is difficult to progress UL RS design without addressing these issues (aspects of the design are inter-related)**

Two Potential "Ways Forward" – Option 1

- **Option 1: Selective use of a LB for sounding**
  - **Data demodulation RS can be FDM**
    - RS BW = RB BW for localized RB
  - **Sounding RS (if present) can be CDM or FDM on a LB**
  - **Can use part of an LB (e.g., every other subcarrier) to reduce overhead**
  - **Data demodulation RS length at least 12 if RB is at least 24 subcarriers**
  - ***Clean design, no overhead if sounding not used***

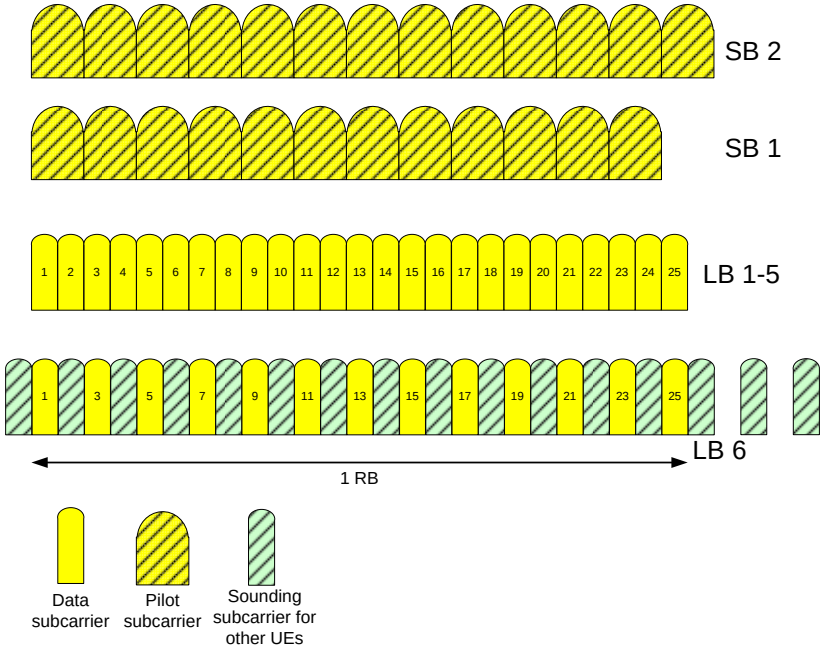

Two Potential "Ways Forward" – Option 2

- **Option 2: Allow data demodulation RS to potentially be wider than resource allocation, additional broadband sounding separately multiplexed on short blocks**
  - **Key observation 1: Sounding and data demodulation RS may be separately multiplexed using every other subcarrier on one (or both) SBs**
    - Variable BW sounding (e.g, up to 20MHz) multiplexed on every other subcarrier
      - 'Hopping' an RS on a SB may be unnecessary
    - Cost: Data Demod RS Sequence length is cut in half (6 for 25sc RB, 3 for 12 sc)
  - **Key observation 2: Data demodulation RS could be wider than resource allocation (e.g., nominal 1.25 or 2.5MHz), on every other subcarrier**
    - Allows longer length sequence (and therefore more sequences for planning)
      - Data demod RS BW of at least 2RB overcomes sequence length issue
    - Data Demodulation RS provides limited inherent channel sounding capability (not broadband)
    - Small degradation in data demodulation performance from reduced pilot power density

Option 2

- **D = Data Demodulation RS bandwidth (minimum)**
  - E.g. 2 RBs, 1.25MHz, 2.5MHz, or 5MHz (nominal)
  - May be equal to channel bandwidth
- **S = Sounding RS bandwidth (configurable)**
  - May equal channel BW
  - May be less than channel bandwidth but greater than D
  - May equal D (if needed for edge of cell users)

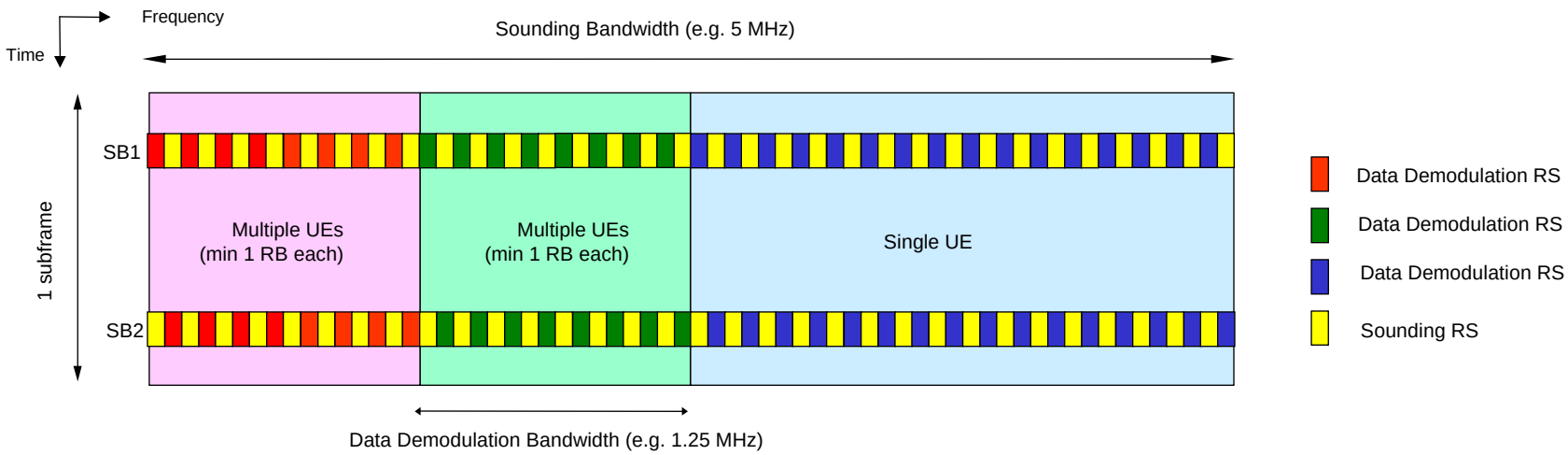

#Users and Sequence Length

Nominal Data Demod RS BW (min)	#RBs (25sc)	#RBs (15sc)	Max #users	Sequence Length (CDM)
"0.75 MHz"	2	~3	6	12
"1.25MHz"	3	5	6	18
"2.5MHz"	6	10	6	37
"5MHz"	12	20	6	75

- With RS on every other sc, 6 users RS are orthogonal with 5.56us shifts (either CDM with Walsh or FDM)
- 1.25 or 2.5MHz provide enough sequences for planning, possibly 0.75 MHz as well
- 2.5MHz with small RB (15sc) restricts scheduler to max 6 users in 10 RB
- Minimum transmit BW > 1 RB may have edge-of-cell or OOB problems (FFS)

Data Considerations

- **Degradation for D=1.25MHz ~0.5dB (localized allocation, R1-061721)**
- **Allowed RB allocations**
  - **Within the D = Data Demodulation RS Bandwidth, users can be allocated in 1 RB increments**
    - D = 1.25MHz, 1 to 3 RBs
  - **If more than D is to be transmitted, need to add BW in chunks of D**
    - 1.25MHz has 3RBs, next allocation after 3 RBs is 6 RBs (4 and 5 not available), then 9 or 12 RBs
    - Cannot concatenate 1.25MHz or 2.5MHz pilots at UE and have good CM as repetition in F domain = every other sample in T domain = higher CM
    - Alternative: any # of RB can be assigned, but may have to leave some RBs empty
    - [Degradation TBD]
- **RS to be used are either explicitly assigned or are known from the order of resource allocation**
- **Distributed data allocations are possible (can define later, if used)**
- **MIMO RS are TBD**

Sounding Considerations

- **6 users per S = Sounding RS bandwidth (every other subcarrier used)**
  - **CDM with Walsh coding over the 2 SBs likely unnecessary for sounding purposes**
    - 3 users per SB, rather than 6 users coded across both SB
  - **Can edge of cell users do broadband sounding?**
    - Will edge of cell users be FS scheduled?
    - BW or power of sounding could be adjusted
  - **Configuration (signaled in joint control, broadcast control, etc.)**
  - **2 SB sounding RS (as shown)**
  - **No sounding RS: RS on every sc for data demodulation**
    - Best to have S = D (same BW)
    - Having D larger than RB bandwidth only needed for sequence length (# sequences)
  - **Configuring system-wide or per cell is TBD**
  - **(Also, supporting 1 sounding SB rather than on both SBs may add unnecessary complexity – C.E. and signaling)**
- **Broadband sounding may be periodic or explicitly assigned**
  - **To get broadband sounding at same time as data transmission can use sounding RS on one SB and leave normal RS on that SB empty (maintain low CM)**

CDM Walsh Encoding Issues for Data Demodulation RS

- **If CDM used for data demodulation RS (to get longer sequence), there is a cost in delay spread/Doppler performance**
  - **Walsh coding over both SB assumed to provide adequate #users using one base sequence and a number of "shifts"**
    - Same set of cyclic shift values (multiple of *D* samples) used in both group of UEs (UE 1 to 3 in group 1 and UE 4 to 6 in group 2 on same RS)
    - No near-far problem if restrict to one base sequence
  - **Degradation at high delay spread**
    - A fraction of a dB when channel delay spread approaches shift length (~0.5dB for TU channel)
  - **Degradation at high Doppler**
    - Group 1 and group 2 interfere with each other (within a single SB) regardless of the delay spread – the interference cancellation relies completely on the collapsing (combining) of the pilots of both SB1 and SB2
- **Careful selection of the shift values may mitigate the degradation**
  - **Cyclic shift values for second group of users should be offset so that high Doppler only causes degradation when high delay spread is present**
    - By offsetting the cyclic shift values used by UEs in group 2 by *D*/2 relative to group 1, orthogonality *within* each SB can be achieved at moderate delay spreads, thus significantly enhancing the tracking of high Doppler channels

Pilot Sequence Planning (from R1-061720)

- Careful sequence re-use planning is required as narrowband pilot sequence (e.g., 1RB) is supported on one or both of SBs
- For localized FDM pilot on either SB1 or SB2, the pilot sequence length is 12 or 13 for 1 RB allocation
- A reuse plan for 12 sequences appears feasible
- If # of sequences is too small, then either:
  - Need to increase the minimum data allocation BW > 1 RB
  - Need to increase the minimum pilot BW > 1 RB
- Alternative: Sequence hopping (e.g., selection of different sequences on different subframes or radio frames) to minimize or randomize collisions can be considered

12 Frequency Reuse Plan

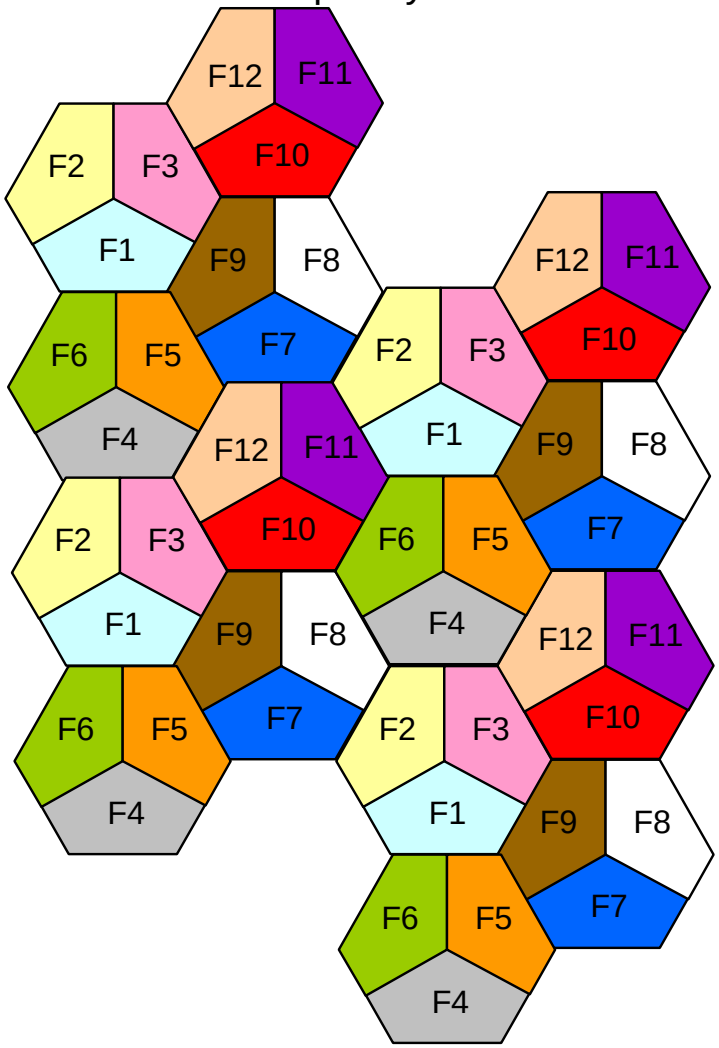
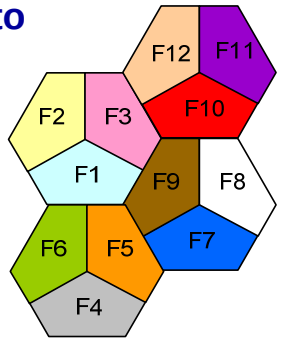
12 Frequency Cluster