Agenda item:	6.2, MIMO
Source:	Lucent
Title:	MIMO system throughput using PARC
Document for:	Discussion

1. INTRODUCTION

We present system simulation results for an HSDPA MIMO system based on the per-antenna rate control (PARC) architecture described in [1].

Using PARC, *T* antennas transmit to a single user during a TTI, and a given set of spreading codes is reused on each antenna. The data rates are adjusted according to the channel quality metric as seen at the receiver. This channel quality metric is based on the signal-to-interference-ratio (SINR) where the interference includes the spatial interference caused by signals sharing the same spreading codes. The metric is described in detail in [2]. In essense, the PARC transmission architecture can be thought of as *T* conventional HSDPA systems transmitting in parallel. Compared with the conventional single-antenna system, PARC achieves higher peak data rates, higher average throughputs, and achieves high data rates with higher probability.

In Section 2, we describe the link-level operation of PARC. In Section 3, we describe the system simulation methdology. In Section 4, we give the numerical results in terms of average sector throughput, and probability of achieving certain ranges of data rates.

2. LINK LEVEL DESCRIPTION

In this section we describe the PARC transmission technique, the channel model, and the receiver architectures.

A block diagram of PARC transmission is shown in Figure 1 with *T* transmit antennas. The high-speed data stream for a given user is first demultiplexed into *T* substreams. The number of bits assigned to each antenna may be different depending on the rate assignment. Following demultiplexing, the individual substreams for each antenna are turbo encoded, interleaved, and mapped to symbols. Each of the *T* substreams is then demultiplexed into *C* sets of symbols. The *C* symbols for each antenna are each modulated by one of *C* mutually orthogonal spreading codes. The substreams may have different information rates, but the coded symbols have the same symbol period. For a given symbol period, let $b_{t,c}$ ($t = 1 \ldots T$, $c = 1 \ldots C$) be the data symbol to be transmitted from the *t* th antenna and modulated by the *c*th spreading code. Let the *c*th spreading code (which we assume includes the scrambling code) be denoted by the complex-valued chip sequence $s_c[1], s_c[2], \ldots, s_c[F]$ where *F* is the spreading factor. We assume that the spreading codes are mutually orthogonal and normalized to have unit power:

$$\sum_{n=1}^{F} s_c^*[n] s_{c'}[n] = \begin{cases} 1, & c = c' \\ 0, & c \neq c' \end{cases}$$

where * denotes the complex conjugate. Note that a necessary condition for mutual orthogonality is that $C \leq F$. The modulated signals from each of the *T* substreams are summed, and the signal transmitted from the *t*th antenna during the *n*th chip period is $\sum_{c=1}^{C} s_c[n] b_{t,c}$. We define the *T*-dimensional vector $\mathbf{b}_c = [b_{1,c}, b_{2,c}, \cdots, b_{T,c}]^T$ so that the transmitted signal vector is $\sum_{c=1}^{C} s_c[n] \mathbf{b}_c$.

Note that the same spreading codes and scrambling code are reused by each of the transmit antennas. This technique, called code reuse, increases the spectral efficiency but requires spatial processing at the receiver to distinguish code-sharing data streams based on their spatial characteristics. Because of the complete code correlation among code-sharing data streams, code reuse should be used only when the system is code limited. For example, if the total number of substreams is less than the spreading factor *F*, one should use mutually orthogonal codes to minimize the interference among substreams.

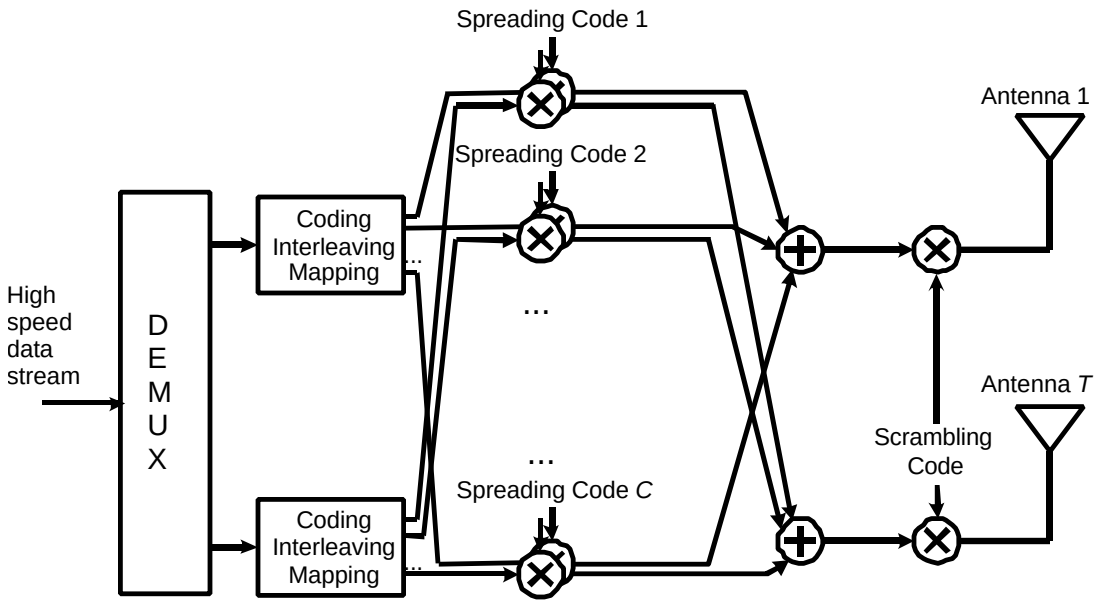

Figure 1. Block diagram of PARC transmitter

We assume that the channel is flat fading and is represented by the *R* -by- *T* channel matrix **H**. We further assume that the channel is spatially uncorrelated so the components of **H** are i.i.d. complex Gaussian random variables with zero mean and unit variance.

We assume that the receiver has *R* receive antennas. The complex baseband received signal during the *n*th chip is an *R*-dimensional vector given by

$$\mathbf{y}[n] = \sqrt{\frac{G}{T}}\mathbf{H}\sum_{c=1}^{C} s_c[n]\mathbf{b}_c + \mathbf{n}[n] \tag{1}$$

where *G* is the normalized power of the received signal, *T* is the number of transmit antennas, **H** is the channel matrix, $\mathbf{b}_c = [b_{1,c}, b_{2,c}, \cdots, b_{T,c}]^T$ is defined to be the *T*-dimensional vector of transmitted symbols from the *T* antennas, and **n**[n] is the *R*-dimensional additive complex Gaussian noise vector with zero mean and unit variance: $E\left[\mathbf{n}[n]\mathbf{n}^H[n]\right] = \mathbf{I}_R$ where superscript *H* denotes the Hermitian transpose, and $\mathbf{I}_R$ is the *R*-by-*R* identity matrix.

For receiver architectures, we consider a minimum mean-squared error (MMSE) detector [3] with and without interference cancellation. As shown in Figure 2, the MMSE detector without interference cancellation first demodulates the received signal from each receive antenna with a bank of filters matched to the *C* spreading codes. The *R*-dimensional vector following dispreading by the *c*th code $s_c[1], s_c[2], \ldots, s_c[F]$ is

$$\mathbf{r}_c = \sum_{n=1}^{F} s_c^*[n]\mathbf{y}[n] = \sqrt{\frac{G}{T}}\mathbf{H}\mathbf{b}_c + \mathbf{n}_c$$

where $\mathbf{n}_c$ is the resulting noise vector with zero mean and unit variance: $E\left[\mathbf{n}_c\mathbf{n}_c^H\right]=\mathbf{I}_R$. An MMSE linear transformation represented by the R -by- T matrix $\mathbf{W}$ is applied to each of the vectors $\mathbf{r}_1,\cdots,\mathbf{r}_C$. The linear transformation minimizes the mean squared error between its output $\mathbf{W}^H\mathbf{r}_c$ and the data vector $\mathbf{b}_c$. The matrix $\mathbf{W}$ is independent of the code index c and is given by [3]

$$\mathbf{W}=\sqrt{\frac{T}{G}}\mathbf{H}\left(\mathbf{H}^H\mathbf{H}+\frac{T}{G}\mathbf{I}_T\right)^{-1}.$$

In general, the matrix $\mathbf{W}$ is dependent on the estimated channel coefficients; however, we assume throughout this paper that the receivers perform perfect channel estimation. Writing the matrices $\mathbf{W}$ and $\mathbf{H}$ in terms of their column vectors, $\mathbf{W}=\left[\mathbf{w}_1...\mathbf{w}_T\right]$ and $\mathbf{H}=\left[\mathbf{h}_1...\mathbf{h}_T\right]$, the MMSE output corresponding to the tth transmit antenna and cth code is

$$\mathbf{w}_t^H\mathbf{r}_c=\sqrt{\frac{G}{T}}\mathbf{w}_t^H\mathbf{h}_t b_{t,c}+\sqrt{\frac{G}{T}}\sum_{j=1,\,j\neq t}^{T}\mathbf{w}_t^H\mathbf{h}_j b_{j,c}+\mathbf{w}_t^H\mathbf{n}_c.$$

Following the MMSE linear transformation, the C soft-symbol outputs corresponding to the tth transmit antenna $\mathbf{w}_t^H\mathbf{r}_1,\cdots,\mathbf{w}_t^H\mathbf{r}_C$ are collected, and hard decisions are made on the symbols. The symbols are demapped to bits, deinterleaved, and decoded with an iterative turbo decoder. As we will see in the next section, for the purposes of the system level simulations, it is sufficient to characterize the signal to interference plus noise (SINR) ratio at the output of the MMSE detector.

If we consider the power received from the other antennas ($j=1...T,\ j\neq t$) as interference, it follows that the SINR for the tth antenna is

$$SINR_t=\frac{\frac{G}{T}\left|\mathbf{w}_t^H\mathbf{h}_t\right|^2}{\frac{G}{T}\sum_{\substack{j=1\\ j\neq t}}^{T}\left|\mathbf{w}_t^H\mathbf{h}_j\right|^2+\mathbf{w}_t^H\mathbf{w}_t}. \qquad (1)$$

Figure 3 shows the block diagram of the MMSE receiver with interference cancellation. The detector has an iterative structure where the index t (t = 1, …, T) indicates the number of passes through the detector. On the first pass, the signals from the first antenna are detected, decoded, and its contributions are subtracted from the original received signal. The received signal $\mathbf{y}^{(1)}[n]$ is the original received signal given in (1), and the MMSE receiver for antenna 1 is the column vector $\mathbf{w}_1$ for detecting the data symbols from the first antenna $b_{1,1},b_{1,2},\cdots,b_{1,C}$. The soft outputs of the MMSE detector are multiplexed, demapped to coded bits, deinterleaved, and decoded. The transmitted signal for the first antenna is reconstructed and its contribution is subtracted from the received signal. Under the assumption of ideal decoding with no errors, the equivalent received signal for the second pass of the detector is

$$\begin{aligned}\mathbf{y}^{(2)}[n]&=\sqrt{\frac{G}{T}}\mathbf{H}\sum_{c=1}^{C}s_c[n]\mathbf{b}_c-\sqrt{\frac{G}{T}}\mathbf{h}_1\sum_{c=1}^{C}s_c[n]b_{1,c}+\mathbf{n}[n]\\&=\sqrt{\frac{G}{T}}\sum_{j=2}^{T}\mathbf{h}_j\sum_{c=1}^{C}s_c[n]b_{j,c}+\mathbf{n}[n]\end{aligned}.$$

In general, the equivalent received signal during the tth pass is

$$\mathbf{y}^{(t)}[n]=\sqrt{\frac{G}{T}}\sum_{j=t}^{T}\mathbf{h}_j\sum_{c=1}^{C}s_c[n]b_{j,c}+\mathbf{n}[n].$$

One can use the following algorithm for computing the MMSE receiver and output SINR for the *t*th pass:

for $\underline{i =}$ 1 to T

$$\mathbf{H}_i = [\mathbf{h}_i \ \mathbf{h}_{i+1} \ldots \mathbf{h}_T]$$

$$\mathbf{W}_i = \mathbf{H}_i \left[\mathbf{H}_i^H \mathbf{H}_i + \frac{T}{G} \mathbf{I}_{T-i+1} \right]^{-1}$$

$$\mathbf{w}_i = \text{first column of } \mathbf{W}_i$$

$$SINR_i = \frac{\frac{G}{T} \left| \mathbf{w}_i^H \mathbf{h}_i \right|^2}{\frac{G}{T} \sum_{j=i}^{T} \left| \mathbf{w}_i^H \mathbf{h}_j \right|^2 + \mathbf{w}_i^H \mathbf{w}_i}$$

end

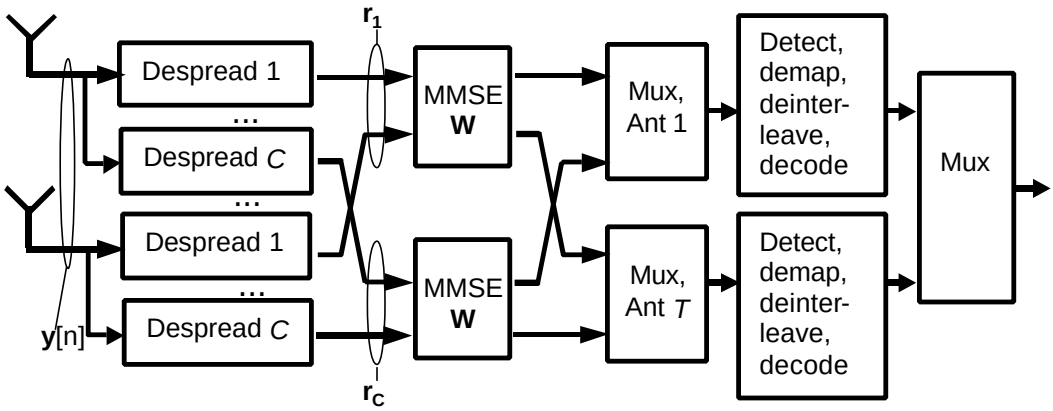

Figure 2. Block diagram of MMSE receiver

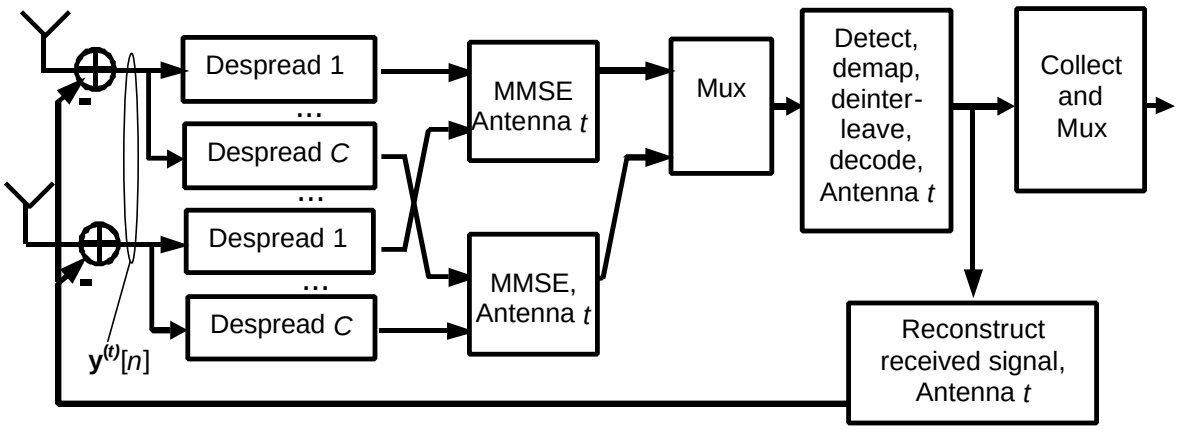

Figure 3. Block diagram of MMSE receiver with post-decoding interference cancellation

3. SYSTEM LEVEL DESCRIPTION

In this section, we describe the system level simulation methodology. The outline of the simulation methodology is given here, and we discuss each step in detail below.

For d = 1 to D drops

Drop *K* data users per sector within the geographic area of the system.

For f = 1 to F frames

1. Compute the channel impulse response for the serving cells as well as all interfering cells. The channel realizations are updated once per transmission interval and are evolved in time from the previous transmission interval.
2. Determine the SINR for each antenna at each user as a function of the channel impulse response, as described in the previous section. A channel quality indicator based on the measured SINR is fed back to the base station.
3. The base station selects the user to be served and its data rate based on the SINR feedback, the scheduling algorithm, the power available for the data users, and the state of the user traffic queues.

End

End

Drop K data users in a sector of the center cell and determine their geometries.

The system consists of a hexagonal cell surrounded by two rings of cells. Each cell is divided into either 3 sectors of 120 degrees. There are a total of 19 cells and 57 = 19 x 3 sectors. Each user receives signals from all sectors, and all bases are assumed to transmit with full power in each sector. The desired base is the one whose received signal is the strongest after accounting for pathloss, shadow fading, and antenna gain patterns. If we $P_{k,j}$ be the received power at the *k*th user (*k* = 1 … *K*) from the *j*th base (*j* = 1 … 57), then

$$P_{k,j} = P_{\max}\left[\frac{d_{k,j}^{g}}{d_{\min}^{g}}\right] S_{k,j} A_{k,j}$$

where $P_{\max}$ is the transmitted power, $d_{k,j}$ is the distance from the *j*th base to the *k*th user, g is the path loss constant, $d_{\min}$ is the reference minimum distance, $S_{k,j}$ is the shadow fading, and $A_{k,j}$ is the antenna gain from the *j*th base to the *k*th user as a function of its angular direction. The antenna gain patterns are shown in Figure 4. The geometry of the *k*th user is the ratio of the strongest received signal to the interference, defined as

$$G_k = \frac{\max_j P_{k,j}}{\sum_{j=1}^{57} P_{k,j} - \max_j P_{k,j}}.$$

Realizations of the random variable G_k can be collected, and a cumulative distribution function (CDF) is drawn in Figure 5. (An additional assumption is 0.5 correlation for shadowing among bases.) For each of the *K* users on a given drop, a realization of its geometry is chosen from the CDF, and this value is constant over the duration of the drop.

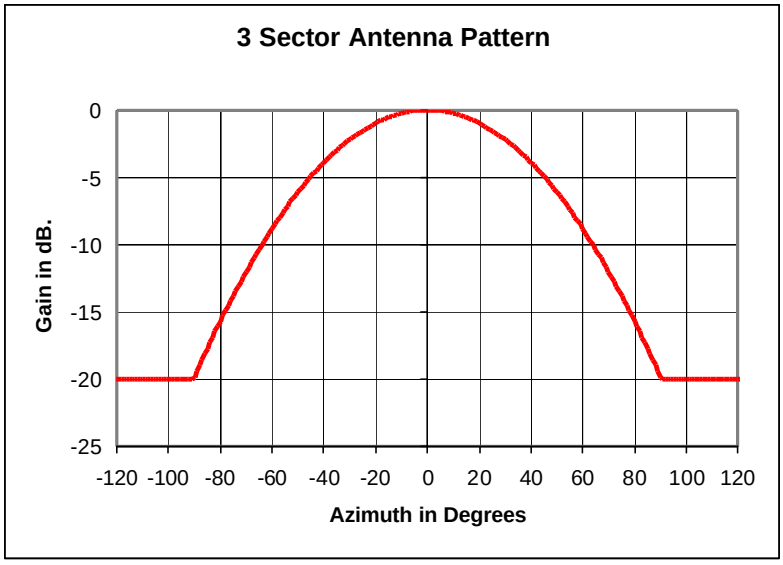

Figure 4. 3 sector antenna beam pattern

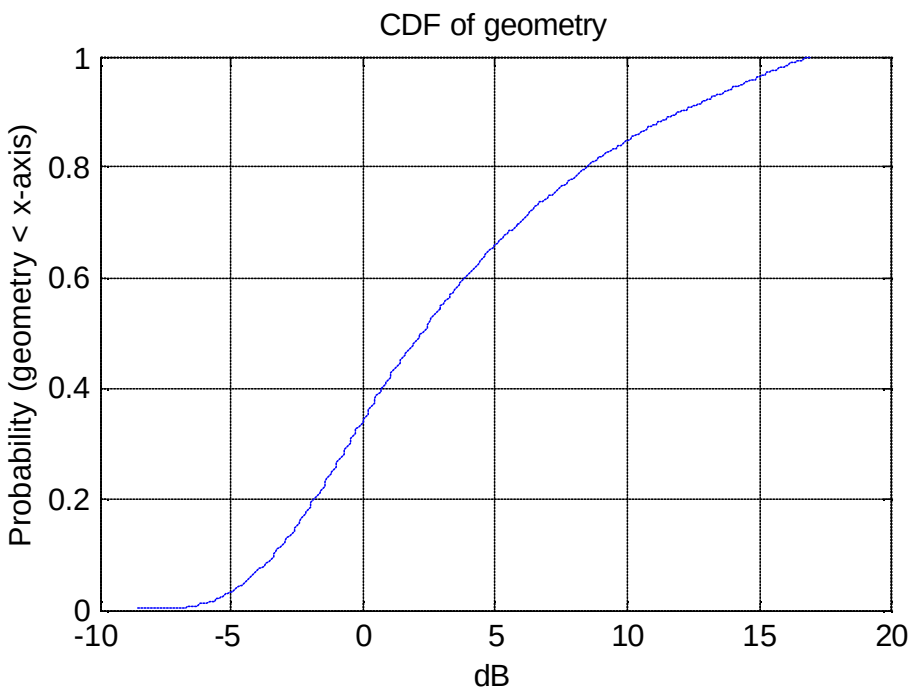

Figure 5. CDF of geometry

Compute the channel impulse response for the serving cells as well as all interfering cells. The channel realizations are updated once per frame and are evolved in time from the previous frame.

Let T be the number of base station transmit antennas and let R be the number of mobile receive antennas, and let N be the number of multipath components of the received signal. The channel impulse response for the kth user of frame f is defined as

$$\sqrt{\frac{G_k}{T}}\mathbf{H}_k(f) \tag{4}$$

where $\mathbf{H}_k(f)$ is the R-by-T channel realization matrix represented by $\mathbf{H}$ in the previous section which captures the effects of fast fading. For spatially uncorrelated channels, the values of $\mathbf{H}_k(f)$ evolve in time according to Jake's model. The factor T in (4) is a normalization factor for ensuring that the total transmitted power is independent of the number of transmit antennas.

Determine the SINR for each antenna at each user as a function of the channel impulse response, as described in the previous section. A channel quality indicator based on the measured SINR is fed back to the base station.

A channel quality indicator (CQI) is determined for each transmit antenna based on its measured SINR computed in the previous section. The CQI is an index into a set of data rates, and it gives the highest data rate each antenna should transmit based on its measured SINR.

The required SINR used in the simulations and shown in the table below were obtained directly from [4] and increasing the data rates by 3.125 = 3.84/1.2288 to account for the larger bandwidth. Note that in the simulations, an additional margin has been added to account for non-idealities in the receiver. The margins are 1.3dB for rates 3840kbps and below, 1.9dB for 5760kbps, and 3.2dB for 7680kbps.

Data rate (kbps)	$SINR_{req}$ (dB), 1%FER	$SINR_{req}$ (dB), 0.5% FER	$SINR_{req}$ (dB), 0.25% FER
120	-12.7	-12.6	-12.4
240	-9.9	-9.8	-9.6
480	-6.9	-6.8	-6.6
960	-3.9	-3.8	-3.6
1920	-0.8	-0.7	-0.5
2880	1.9	2.0	2.2
3840	4.2	4.3	4.5
5760	8.9	9.1	9.4
7680	12.2	12.4	12.7

Table 1. Required SINRs

For conventional single antenna transmission, the requested rate is the maximum of those rates whose corresponding required SINRs are less than the measured SINR. Assuming a frame error rate of 1%, the required SINRs are given by the second column of Table 1. For example, if the received SINR is –0.6dB, then the requested rate would be 1920kbps. For PARC transmission with T = 2 antennas, the rate for each antenna is chosen independently using the same technique, but the target SINRs correspond to the 0.5% FER since we want the total FER to be less than 1%. For example, suppose the SINRs are –10dB for the first antenna and –0.6dB for the second antenna. According to the third column of Table 1, the requested rates would be 120kbps for the first antenna and 960kbps for the second. If the SINR from any antenna is less than the minimum –12.6dB, then that antenna does not transmit. For PARC transmission with T = 4 antennas, the rightmost column of Table 1 is used for the required SINRs.

We emphasize that with PARC, even though there are T transmit antennas available, the base does not necessarily transmit using all T antennas. Specifically, for lower data rates it is often more efficient to transmit with only a single antenna.

The base station selects the user to be served and its data rate based on the SINR feedback, the scheduling algorithm, the power available for the data users, and the state of the user traffic queues.

Given the received SINR at each user for each transmit antenna, the base station determines which user to serve. We choose to use a proportional fair scheduling algorithm [5] in order to ensure fairness for all users in the system. Let $R_k(f)$ be the total requested rate of the *k*th user on the *f*th frame. For single antenna transmission, this rate is one of the 9 rates in Table 1. For PARC transmission, this rate is the sum of the rates transmitted by each of the antennas. The rates of each antenna are from Table 1 but there is also the possibility that at least one of the antennas has zero rate because it is not transmitting. Let $\bar{R}_k(f)$ be the average rate received by the *k*th user on the *f*th frame. This average is computed using a sliding window average based on a forgetting factor b :

$$\bar{R}_k(f) = (1-b)\bar{R}_k(f-1) + b\,R_k(f-1), \quad f = 2...F\ .$$

The served user is the one whose ratio of requested rate to average rate is the highest:

$$k^*(f) = \operatorname{argmax}_k \frac{R_k(f)}{\bar{R}_k(f)}$$

We assume that 100% of the total power is available for data transmission and that the data buffers for all active users are always full. We assumed that all transmissions are received without errors to provide upper bounds on the throughput.

4. NUMERICAL RESULTS

We run system simulations for k = 1, 2, 4, 8, 16 users per sector and for T = 4 antennas. We use the notation (T,R) to denote a system with T transmit antennas and R antennas per mobile. General simulation parameters are given in Table 2, and the parameters for the spatially correlated channels are given in Table 3.

D (number of drops)	1000
F (frames per drop)	3000
Power delay profile	Flat
MS speed	0.75 m/s
Channel estimation	Ideal
MS Feedback	Ideal, no delay
Receivers	MMSE, MMSE with IC
Frame duration	1.33 μs
Scheduler	Proportional fair
β (Scheduler forgetting factor)	0.001

Table 2. Simulation parameters

We choose the average sector throughput as the main performance metric. This throughput is defined as the total number of bits transmitted by the base over D drops with F frames per drop divided by the total duration of the DF frames. Figure 5 shows the sector throughput (120-degree sectors) as a function of the number of users per sector k for the following systems:

(1,1) single antenna transmitter, single antenna receiver

(1,4) single antenna transmitter, 4-antenna receive diversity.

(4,4) selection transmit diversity (STD); single antenna transmission where the rate requests are based on the highest SINR of the four transmit antennas, 4-antenna receive diversity.

(4,4) PARC, MMSE: PARC transmission with MMSE receiver.

(4,4) PARC, MMSE-IC; PARC transmission with MMSE interference cancellation receiver.

Figure 6 shows the average sector throughput as a function of the number of users per sector. As the number of users increases, the throughput increases because of the multiuser diversity gains. Because diversity gains diminish as the total diversity order increases, multiuser diversity gains provide the most benefit for the (1,1) system where there are no other forms of diversity. We make comparisons among the systems for K=16 users because the throughput has saturated at this point. For K = 16 users, the (1,1) system throughput is 3750 kbps. Using four receive antennas for maximal ratio combining, the (1,4) throughput is 4840 kbps, a 30% increase in capacity. From link level simulations, four receive antennas would result in at least a 6dB combining gain over a single receive antenna. For scheduled packet data systems, link level gains do not translate directly to system capacity gains (in this case, a factor of 4) because of the interaction of the proportional-fair scheduler. The STD throughput is 5470 kbps, a 13% increase in capacity compared to the (1,4) case. Allowing the option of PARC and using the MMSE detector, the throughput is 7500 kbps which is double the (1,1) throughput and 37% more than the STD throughput. Finally, using the MMSE with interference cancellation, the throughput of 8750 kbps is 60% higher than the STD throughput.

Figure 7 shows the cumulative distribution functions (CDFs) of the served rates for K = 16 users per sector. For example the (1,1) system, the base on average transmits a data rate of 3840 kbps or higher about 52% of the time. It transmits at the highest data rate of 7680 kbps about 10% of the time. For comparison, the STD and PARC with MMSE-IC transmit at 7680 kbps 30% and 55% of the time, respectively. Hence the coverage of the highest single-antenna data rate is nearly doubled using PARC compared to STD. For the same coverage fraction of 30%, PARC can achieve a data rate of about 3500kbps. Finally, PARC achieves a higher peak data rate over 20Mbps, nearly 3 times the peak rate of conventional HSDPA.

5. CONCLUSIONS

We presented a MIMO technique called per-antenna rate control (PARC) that provides high spectral efficiency by transmitting data streams simultaneously on multiple antennas sharing the same set of spreading codes. For a system with 4 transmitters and 4 receivers per mobile, system simulations show that PARC provides better coverage, higher peak data rates, and higher average system throughput compared to conventional HSDPA and STD alone.

6. REFERENCES

[1] Lucent, “Increasing MIMO throughput with per-antenna rate control.” TSG_R WG1 document TSGR1(01)0879; 27th-31st August 2001, Turino, Italy.

[2] Lucent. Channel metric for MIMO PARC. TSG_R WG1 document TSGR1-030507, 19th-23th May, Paris France.

[3] S. Verdu, *Multiuser Detection*, Cambridge University Press, 1998.

[4] "Tables for AT-MPS FTC demodulation performance in AWGN," 3GPP2 document, C41-20010809-003RC1.

[5] P. J. Black, M. I. Gurelli, "Capacity simulation of cdma2000 1xEV wireless internet access system," *Proceedings of IEEE Mobile and Wireless Communication Networks Conference*, August 2001.

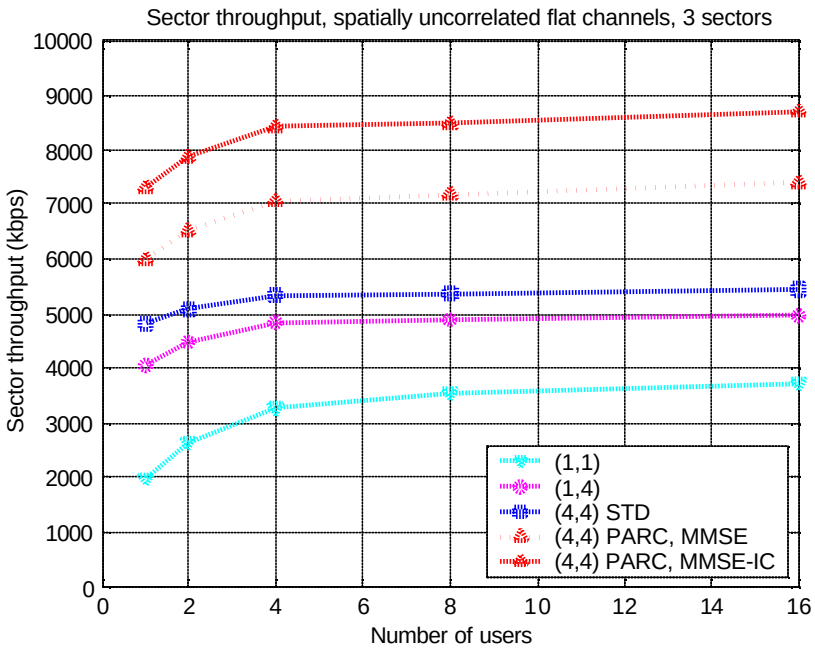

Figure 6. Sector throughput, T = 4, R = 4

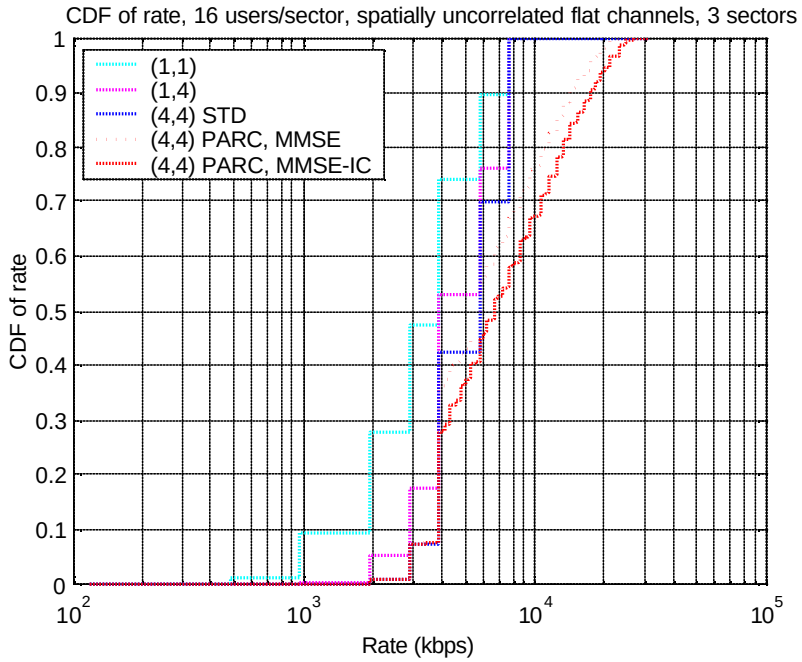

Figure 7. CDF of rates, K = 16 users, T = 4, R = 4