3GPP TSG RAN Rel-18 workshop
Electronic Meeting, June 28 - July 2,2021

RWS-210469

ZTE
Tomorrow never waits

Source: ZTE, Sanechips
Agenda: 4.2

Discussion on Working Areas of XR for 5G Advanced

Outline

- Overview of RAN1 Evaluation Results for Rel-17 XR SI
- Considerations on XR Working Areas for 5G Advanced
  - Capacity Perspective
  - Power Perspective
- Proposed WID for Rel-18 XR

Evaluation Results Overview

Up to RAN1#105-e, initial evaluation results focus on capacity and power saving:

- Input on capacity from 14 sources
  - 12 sources have submitted results for DL VR or CG
  - 7 sources have submitted results for UL pose/control or aggregated data

- Input on power from 7 sources
  - 7 sources have submitted results for DL
  - 2 sources have submitted results for UL
  - 3 sources have submitted result for DL + UL

© ZTE Corporation. All rights reserved

Evaluation Results Overview - Capacity

The median of capacity statistics (# of UE per cell with 90% satisfaction rate) is listed as follows under similar settings(traffic, PDB/PER, scheduler setting etc.)

FR1, DL Capacity				
Traffic	***30Mbps, 10ms***	***45Mbps, 10ms***	***8Mbps, 15ms***	***30Mbps, 15ms***
Indoor Hotspot	10.1	6.7	>15	12.8
Dense Urban	9.5	6.0	>15	13.2
Urban Macro	8.0	4.0	>13	9.5
FR2, DL Capacity				
Traffic	***30Mbps, 10ms***	***45Mbps, 10ms***	***8Mbps, 15ms***	***30Mbps, 15ms***
Indoor Hotspot	26.0	20.5	>27	28.0
Dense Urban	23.5	19.0	>26	25.0
FR1, UL Capacity				
Traffic	***Fixed 100Bytes, 10ms***			
Indoor Hotspot	>15			
Dense Urban	>15			
Urban Marco	>15			
FR2, UL Capacity				
Traffic	***Fixed 100Bytes, 10ms***		***20Mbps, 60ms / 10ms***	
Indoor Hotspot	>15		>45	
Dense Urban	>30		>30	

Observation1: *DL is the performance bottleneck based on majority input, thus should be prioritized in terms of enhancement.*

Observation2: *Consider capacity enhancement at least for Uma scenario and FR1*

© ZTE Corporation. All rights reserved

Evaluation Results Overview - Power

The simulation results of power saving techniques are summarized as follows:

	Schemes (DRX cycle, On duration Timer, Inactivity Timer)(ms)	***Mean power saving gain***	***% of satisfied UEs***
Source #1 (45Mbps)	Baseline	/	96.83%
	R15/R16 CDRX (10, 8, 4)	4.8%	92.17%
	eCDRX (16, 6, 3)	25.43%	93.50%
Source #2 (8Mbps)	Baseline	/	>90%
	R15/R16 CDRX (10, 5, 5)	12%	>90%
	eCDRX(16.667, 8, 3)	27%	>90%
Source #3 (45Mbps)	Baseline	/	100%
	eCDRX (16, 5, 2)	25.5%	94%

Observation 1: *R15/R16 CDRX provides limited power saving gain with some capacity loss.*
Observation 2: *CDRX enhancements (eCDRX) can provide attractive power saving gain compared with legacy DRX*

eCDRX schemes:

- Source#1(R1-2104397): Alignment DRX ON duration start time with the arrival of XR traffic.
- Source#2(R1-2105831): Adjustment of DRX period to be aligned with frame refresh period
- Source#3(R1-2105605): Dynamic change of drx-startoffset

© ZTE Corporation. All rights reserved

Potential Working Areas - Capacity

DG Enhancement

- **Link adaptation techniques for (Re-)Tx**
  - Report of delta CQI, CBG based Tx
  - Enhanced CQI measurement for better Tx Efficiency

  Note: This topic has been discussed under Rel-17 uRLLC/IIoT
- **Pre-emption/Cancellation under DL/UL Concurrent Transmission**
  - Guaranteed transmission for data flow with more stringent QoS requirement
  - Pre-emption/Cancellation based on QoS parameter/traffic characteristic difference, e.g. importance/PDB/PER, among different data streams
- **Network coding**
  - A method to exploit link diversity
  - RAN protocol stack adaptation for application layer traffic characteristic and requirements
- **Enhancements related to Delay-Aware Scheduler**
  - Further investigate the potential spec. impact in interaction with ADU (Application Data Unit)
  - Potential differentiation on 5QI PDB requirement differentiation within a single stream

Note: Evaluation wise, DG is assumed due to it's suitable to the arrival time/T-F resource fluctuation of XR Traffic. Enhancement on CG/SPS, if proposed, is supposed to be justified with simulation results

© ZTE Corporation. All rights reserved

Potential Working Areas - Capacity

Cross Layer Design

- **Inter-cell Interference Coordination**
  - Mechanism to mitigate interference of neighbor cell to aide scheduling
  - Higher layer support to achieve gNB coordination
- **Adaptive Tx for multiple streams with priority based pre-emption/cancellation**
  - Answering to SA4 initiative on integration into 5QI, RAN1 is expected to perform simulations and identify the technical issues/solutions thereof in addition to the priority based pre-emption/cancellation.
  - Other 5QI related discussions shall not be initiated until the finalization of this aspect considering the limited budget remaining.

© ZTE Corporation. All rights reserved

Potential Enhancement for Pre-emption/Cancellation Mechanism

- For XR service, collision occurs in different data streams with different priority. Data stream with high priority is likely to require more stringent latency, higher reliability and etc.
- Pre-emption mechanism is capable of ensuring high priority data stream transmission to achieve stringent latency and reusing resource blocks of low priority data stream without collision to efficiently make use of the radio resources, when high/low priority data flows collide.

Rel-15 Pre-emption mechanism

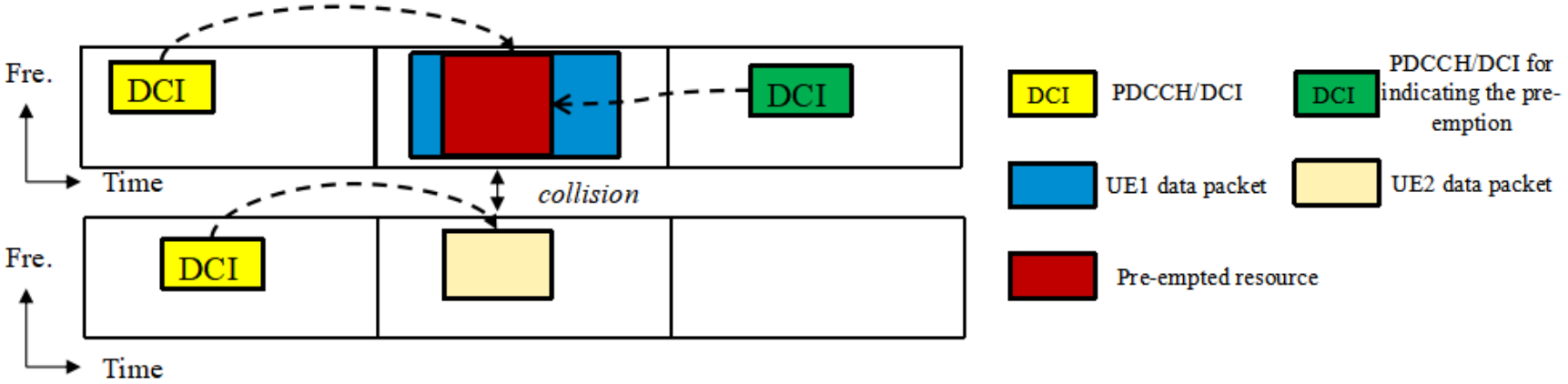

Potential Enhancement

- Finer granularity should be considered for improving Rel-15 pre-emption mechanism
- Exact rate matching pattern proactively excluding the impact of high priority data flow could be delivered to XR UE

© ZTE Corporation. All rights reserved

HARQ Enhancement: CBG-based Re-transmission

- One of the characteristic of XR service is large data rate (i.e. large transport block). When gNB receives a NACK, retransmitting large TB is likely to cause network congestion.
- CBG-based transmission is capable of indicating and re-transmitting the CBG in error to reduce data amount of retransmission and save the radio resource.

Rel-15 CBG-based re-transmission

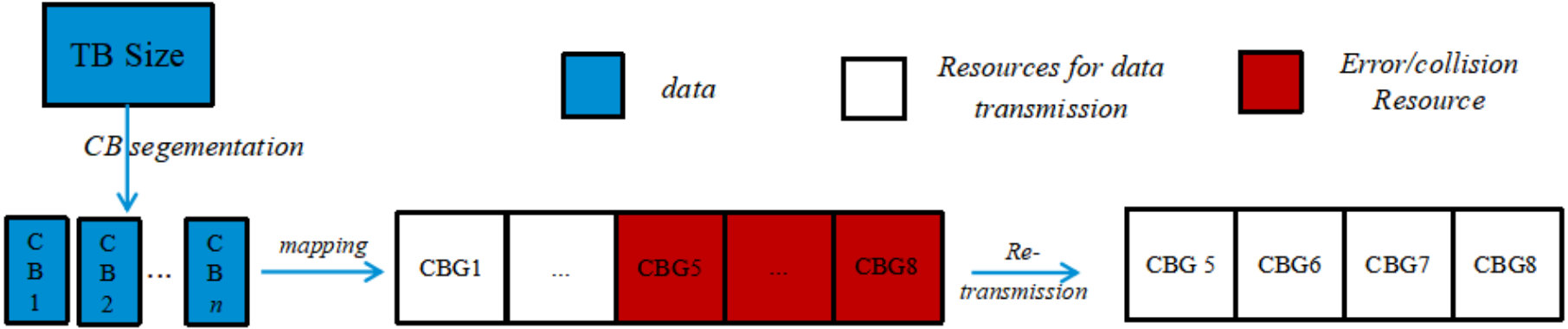

Rel-15 CBG-based re-transmission for XR traffic

- Capable of further improving the capacity by significantly reducing retransmission radio resource.
- Enlarge the feedback length of HARQ-ACK information, increasing the feedback overhead.

© ZTE Corporation. All rights reserved

HARQ Enhancement: CBG-based Re-transmission

- **Problem of Rel-15(Concurrent) CBG-based retransmission**
  - Exhaustive state indication for Re-Tx TB.
  - Variant Re-Tx payload/resources corresponding to the erroneously decoded CBG.
- **Outer Coder for CBG-based retransmisssion**
  - One state indication only for Re-Tx TB: reduced feedback overhead
  - Uniform Re-Tx payload/resources: throughput increase

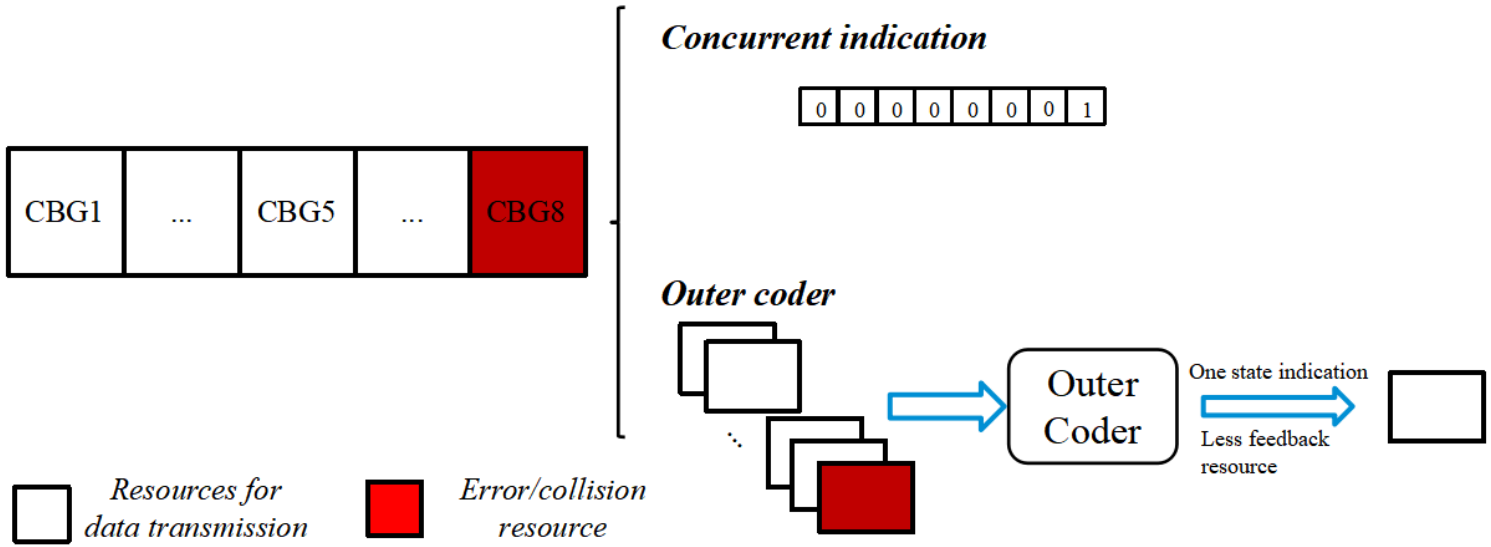

© ZTE Corporation. All rights reserved

HARQ Enhancement: CBG-based Re-transmission

- **Enhanced CBG HARQ + Chase Combined HARQ**
  - LDPC decoder is the key module to determine the throughput and latency of modem chip.
  - For 1st ReTx with CC-HARQ, small blue matrix A is used for LDPC decoding with RV0+RV0, which leads to low delay.
  - For 1st ReTx with IR-HARQ, large red matrix B is used for LDPC decoding with RV0+RV2, which leads to very large delay.
  - It is suggested that enhanced CBG feedback + CC HARQ(instead of IR-HARQ) is applied for a large TB of XR traffic.

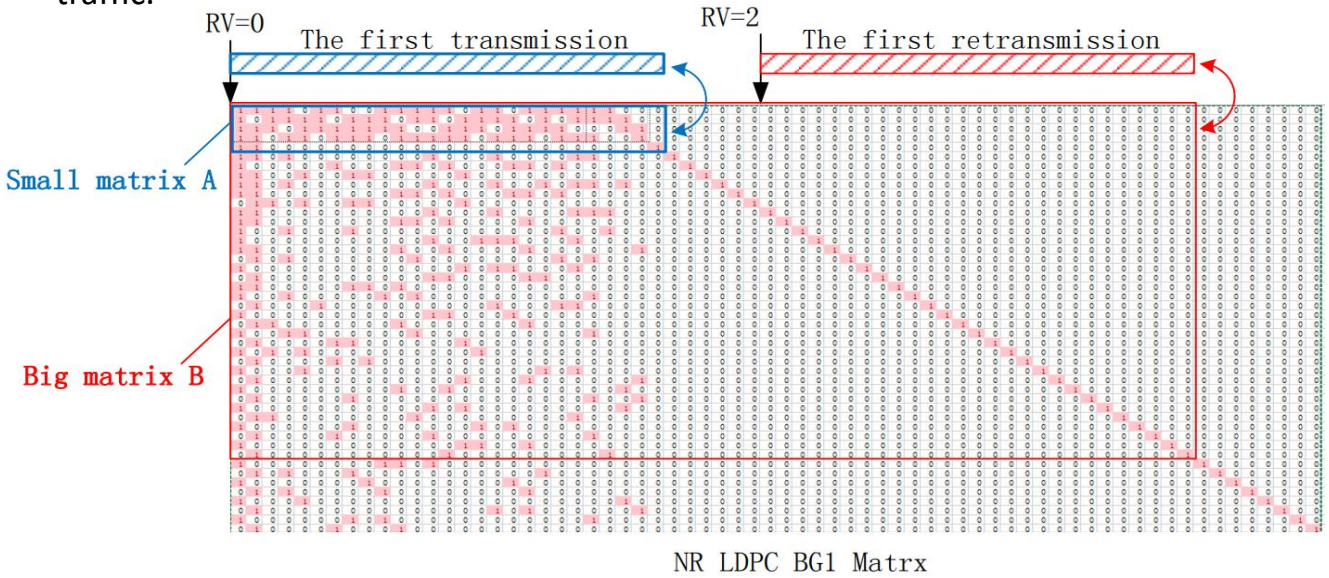

© ZTE Corporation. All rights reserved

Challenges of power saving schemes for XR

- **Both DL and UL**
  - Non-integer traffic cycle (e.g. 16.67ms per frame) – mismatch between traffic cycle and legacy CDRX
    - Appropriate DRX setting (DRX periodicity/DRX on duration timer) delivering trade-off between decent power saving gain & acceptable capacity loss.
  - Non-integer traffic cycle (e.g. 16.67ms per frame) – mismatch between traffic cycle and legacy CG/SPS cycle
  - Variable packet size of video stream
    - Challenging to directly apply legacy CG/SPS settings to harness the power saving gain w.r.t. DG
- **DL**
  - Further mismatch between traffic cycle and legacy CDRX cycle due to jitter
    - Even more challenges calling for dynamic adaptation
- **UL**
  - Frequent transmission of pose/control information (4ms per pose)
    - No chance to enter light sleep state

© ZTE Corporation. All rights reserved

Potential Working Areas - Power

Aspects of power saving schemes that could impact XR performance

- **CDRX**
  - Semi-statistic configuration can not fit the non-integer traffic cycle.
- **Cross-slot scheduling**
  - Large K0min/K2min will cause large latency
- **WUS**
  - Not-wake-up indication may increase the latency.
- **PDCCH skipping/search space set group(SSSG) switching**
  - Long PDCCH skipping duration or large PDCCH monitoring period may have impact on capacity.

Note: This topic has been discussed under Rel-17 power saving

Potential enhancement

- **eCDRX (Enhancements of CDRX)**
  - Dynamically change DRX parameters to align the DRX cycle and traffic cycle. e.g., change the start time of DRX ON Duration or change DRX cycle according to fixed patterns or indication by DCI.
- **Power saving schemes jointly considering UL and DL traffic**
  - e.g., DL and UL alignment
- **FFS: Modified R16/R17 power saving schemes.** e.g., cross-slot scheduling, WUS, PDCCH skipping/**SSSG** switching
- **FFS: UE Assistance Information**

© ZTE Corporation. All rights reserved

Proposed WID for Rel-18 XR

- **Motivation**
  - Enable decent XR capacity and concurrent delivery of XR and other services in NW
  - Strive to fulfill UE power saving gain under acceptable capacity loss
- **A work item with study phase can be considered:**
  - Specify enhancements on dynamic grant including link adaptation techniques for (Re-)Tx, pre-emption /cancellation under DL/UL concurrent transmission, network coding [RAN1, RAN2]
    - Enhanced CQI measurement/report for better Tx efficiency
    - Pre-emption/Cancellation based on QoS parameter/traffic characteristic difference, e.g. importance/PDB/PER, among different data streams
    - NW coding to exploit link diversity, RAN protocol stack adaptation for application layer traffic characteristic and requirements
  - Support of Inter-cell Interference Coordination [RAN3, RAN1]
    - Interface/Signaling to facilitate interference related information exchange
    - Mechanism to mitigate interference of neighbor cell to aide scheduling

© ZTE Corporation. All rights reserved

Proposed WID for Rel-18 XR (Continued)

- Study and if needed, specify the 5QI aspects and relevant pre-emption/cancellation mechanism to enable efficient delivery of (concurrent) XR services [SA4, RAN1]
  - Further study the potential spec. impact in interaction with ADU (Application Data Unit), differentiation on 5QI PDB requirement differentiation within a single stream
  - Adaptive Tx for multiple streams including priority based pre-emption/cancellation
- Specify enhancements on dynamic grant including eCDRX(Enhancements of CDRX) [RAN2, RAN1]
  - Dynamically change DRX parameters to align the DRX cycle and traffic cycle. e.g., change the start time of DRX ON Duration or change DRX cycle according to fixed patterns or indication by DCI
- Study and if needed, specify power saving schemes jointly considering UL and DL traffic, modified R16/R17 power saving schemes, UE assistance information [RAN1,RAN2]
  - Mechanism to ensure DL and UL alignment
  - Study and specify whether cross-slot scheduling, WUS, PDCCH skipping/search space set group switching are modified.
  - Dropping of some consecutive UL transmissions

© ZTE Corporation. All rights reserved
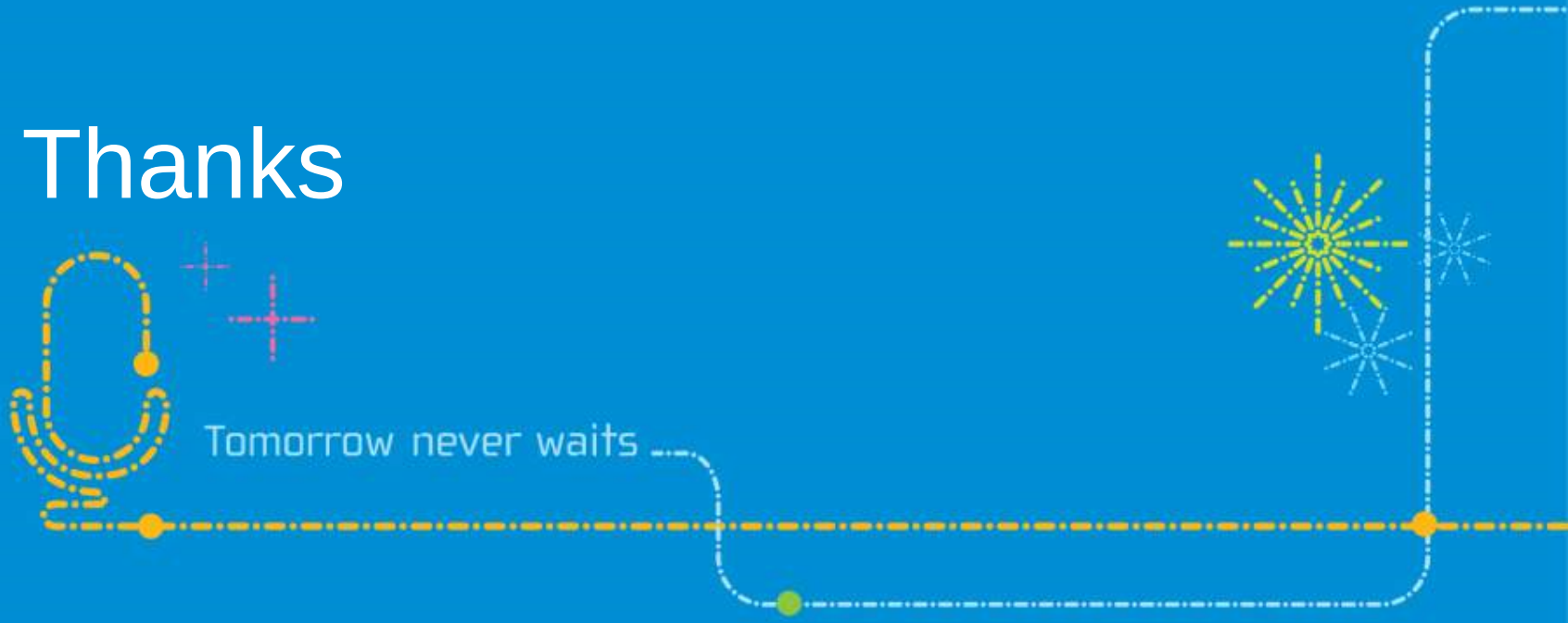
Thanks