3GPP TSG RAN Release 18 Workshop

28th June – 2nd July 2021

RWS-210377

Rel-18 URLLC/IIOT

Agenda Item: 4.2

Source: Intel Corporation

Document for: Discussion

URLLC/IIOT

Motivation to Rel-18

- Overall
  - Mature radio level design, with emerging scenarios still requiring optimizations
- Unlicensed operation
  - Basic unlicensed operation for URLLC/IIOT use cases in semi-static channel access
- Scheduling & HARQ
  - Many scenarios of multiplexing of different services at the UE are still unoptimized
- Sidelink (also refer to our companion tdoc: RWS-210371)
  - Sidelink URLLC was not carefully studied
  - Sidelink-aided IIoT operation can shift the bounds of latency and reliability further e.g., in "sensor-actuator" scenarios

URLLC/IIOT

Potential work – Unlicensed

- Enable URLLC in dynamic channel access and optimize semi-static channel access framework
  - More reliable & faster channel access for both LBE and FBE
  - Enhanced resource allocation and WB operation
  - Further harmonization with URLLC (DCI x_2, priority, repetition & multi-TB, etc.)

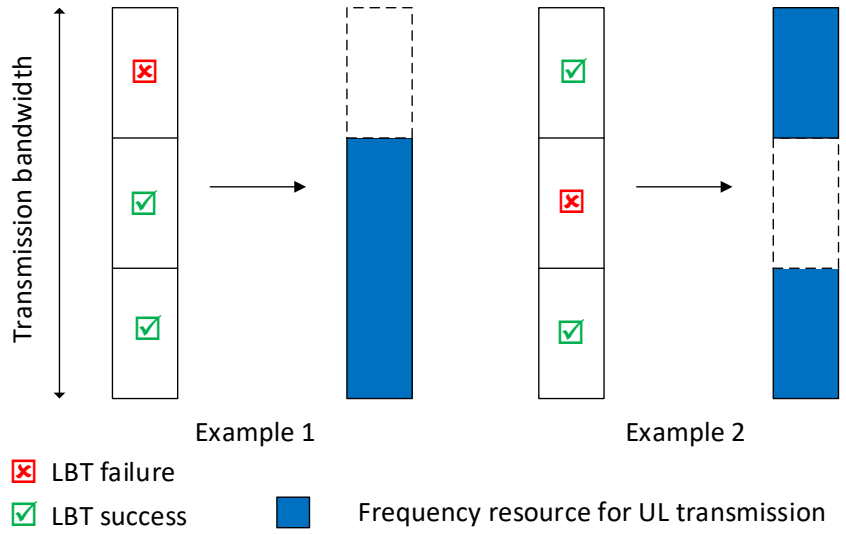

URLLC/IIOT

Potential work – Scheduling & HARQ

- Better handling of different services multiplexing
  - Out-of-order operation in DL and UL for mixed traffic at a UE
  - Tighter processing times (FR2, Cap 3, service-dependent, etc.)
  - Overlap of multiple dynamically scheduled PUSCHs with different priorities
- Survival time aware scheduling
  - E.g., for CG & SPS - avoidance of persistent interference/collisions

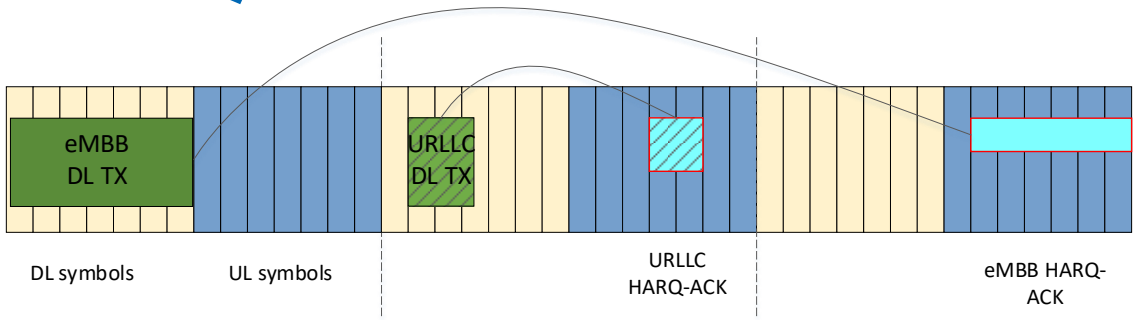

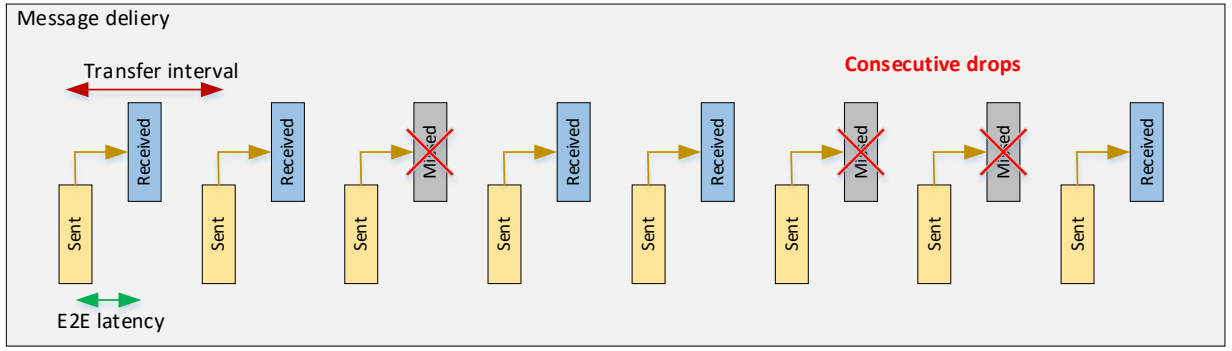

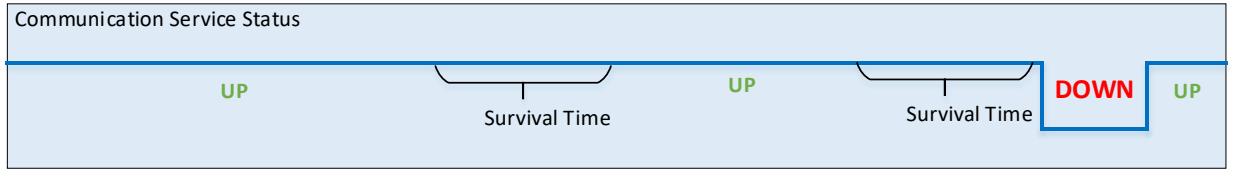

URLLC/IIOT

Potential work – Sidelink for Industrial-IoT

- Augmentation of local Uu forwarding (DL+UL) by direct sidelink transmissions
- Augmentation of Uu (DL or UL) transmission by local PC5 forwarding
- Sub-slot sidelink transmissions with channel access / resource selection enhancements
- Sidelink support in unlicensed spectrum
- Intra-UE service prioritization (resource selection for multiple TBs, etc.)

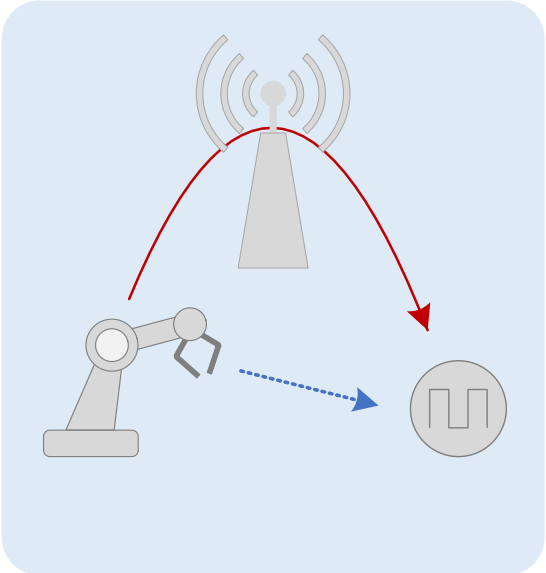

Augmentation of local Uu forwarding (DL+UL) by sidelink transmission

Augmentation of Uu (DL or UL) transmission by local PC5 forwarding

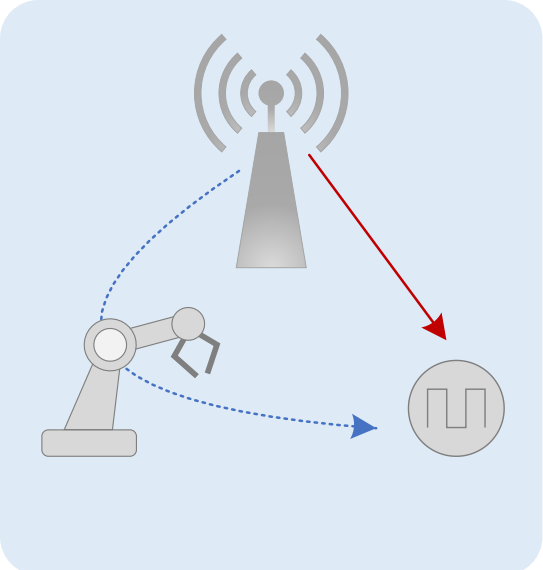

URLLC/IIOT

Potential work – Feedback

- Leftover feedback enhancements, e.g., PDCCH link adaptation, statistical CSI, etc.

Potential work – Higher layer aspect

- UE based PDCP duplication: reduce delay in reacting to the change in radio conditions
- Control plane & mobility for QoS continuity

intel®