3GPP TSG RAN Release 18 Workshop

28th June – 2nd July 2021

RWS-210368

Linear Packet Coding in L2

for RAN performance improvement

Agenda Item: 4.3

Source: Intel Corporation

Document for: Discussion

intel®

Motivation

"Coding" on Layer-2 packets – Not Yet in 3GPP

- Gain at the expense of complexity/overhead
- PHY & MAC – FEC and HARQ → reliability gain per TB basis
- RLC & PDCP – limited to ARQ and retransmission of the same packet (only if not successfully delivered)
- From literatures – Network Coding (most popular)
  - ✓ Coding across multiple packets and throughput gain by intelligent recoding within NW
  - ✓ Known to achieve capacity in single-unicast, single-multicast
  - ✓ Coding across multiple packets is not suitable to 3GPP – sacrifice latency (most real-life packets are delay-constrained)

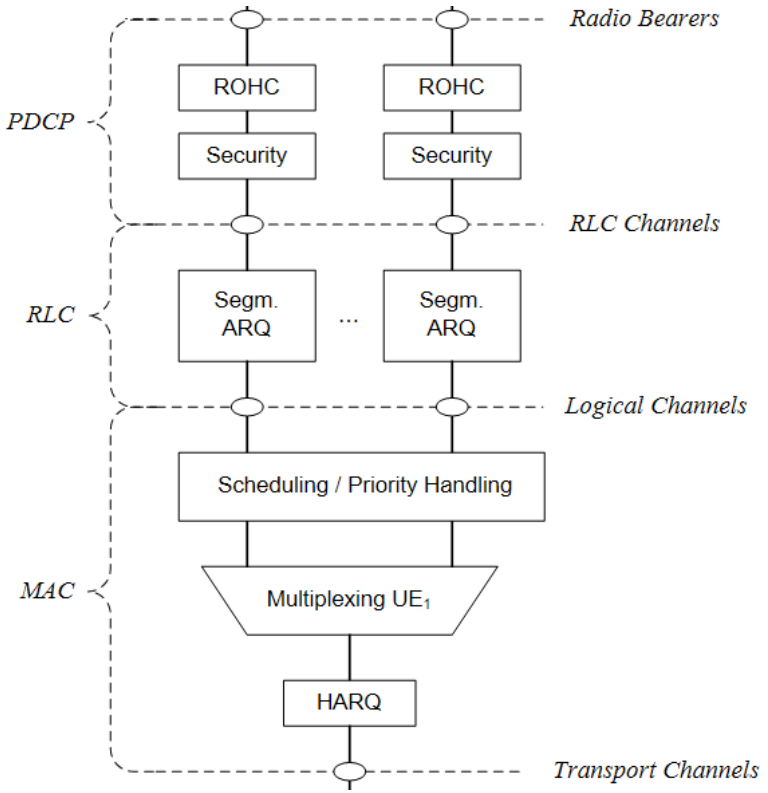

- Coding "per packet" basis can convert reliability gain into system throughput increase

Repetition vs Coding

Per packet coding in L2 is not a new concept in 3GPP

- Rel-16 Packet Duplication (for URLLC)
  - ✓ Sending the same PDCP PDU over multiple links

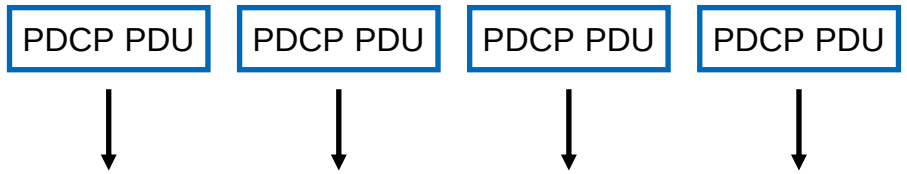

  - ✓ Each link's requirement can be relaxed
  - ✓ Low latency guarantee
- Could be much better
  - ✓ Simply hopes one duplicate successfully goes through
  - ✓ Discarded (wasted) even if multiple duplicates received
  - ✓ Repetition – individual/blind operation (as if no other links)

Applying "Coding" per packet (Rel-18)

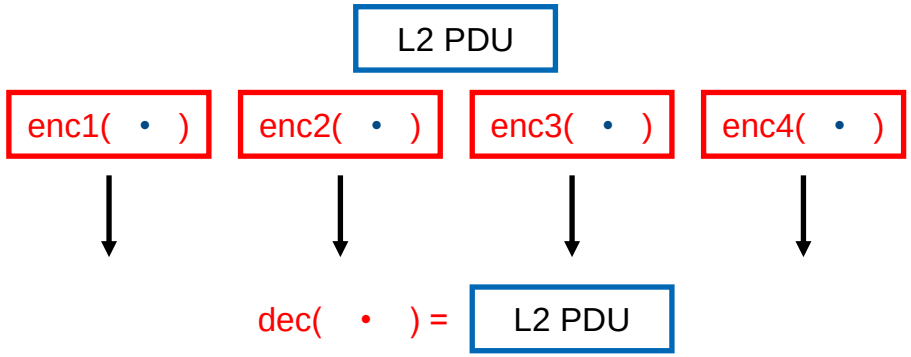

- Enables efficient operation considering multiple links
  - ✓ move away from individual / repeating / inefficient approach
  - ✓ no dependency between coded segments over the radio
- Coding gain
  - ✓ Reliability ↑ without losing resource efficiency / latency
  - ✓ Overall system throughput ↑

Benefits

Improve reliability without compromising resource efficiency or latency

- ✓ Achieving the same reliability target with less resource → spectral efficiency ↑, overall system throughput ↑
- ✓ Performance lower bounded by “packet duplication” (i.e. repetition)

No dependency between coded segments transmitted over the radio

- ✓ Allows efficient use of route diversity + trade-off between rate and reliability
- ✓ Useful for multi-route/multi-connectivity scenarios

In combination with retransmission, allows soft combining in upper layer (not possible by RLC/PDCP)

- ✓ Via coded redundancy, taking less resource than the whole packet retransmission

Practical use (encoding/decoding complexity)

- ✓ Any “linear” block coding that satisfies MDS property (e.g. Network Coding)

Potential to significantly improve RAN performance with little added complexity/overhead!

Protocol and Overhead

Protocol

- below PDCP – per radio bearer with fixed parameters
- Per packet decision – coding (if large), or fallback to duplication
- If IAB network, above BAP layer (no UE impact)

PDU header

- [A field identifying the original packet] + [Encoding operation field]
  - ✓ 3 byte looks sufficient (at least covering PDCP SN space)
  - ✓ Codebook: 1 byte of indexing for reasonably small n

Overhead

- A regular IP packet (1500 bytes)
  - ✓ k = 2 → Each 750 bytes (+4 bytes header) → 0.53% overhead
  - ✓ k = 4 → Each 375 bytes (+4 bytes header) → 1.06% overhead

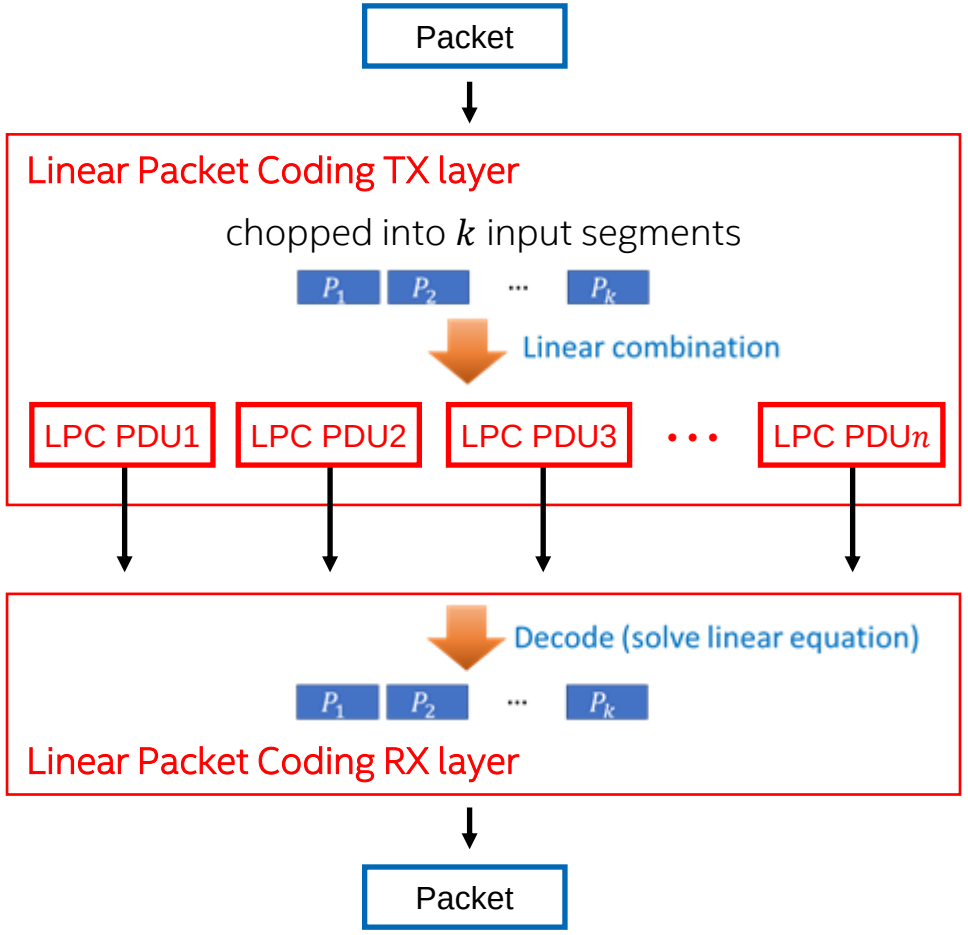

Complexity Analysis

Linear Encoding/Decoding over Finite Field

- (n, k) linear block code with Finite field size $q = 2^p$
- Packet size $L = g \cdot p$ bits (g-dimensional vector over Finite field)
- Encoding – n linear combination of k segments → # of additions and multiplications $\approx n(k-1) \cdot g + nk \cdot g$
- Decoding – matrix inversion/gaussian elimination $\approx O(k^2) \sim O(k^3)$

Complexity over Finite Field operation (addition/multiplication)

- Bit-wise addition modulo 2 → Low
- Quick table look-up (no direct computation of multiplication) → Low
  - ✓ Multiplication results can be stored in a table. E.g. if p=8, 1 byte to store 1 field element, then table size = $2^8 \times 2^8$ bytes = 64 KB
  - ✓ Logarithm & exponentiation look-up table can potentially shrink down the look-up table size. E.g. if p=8, then just 256 bytes.

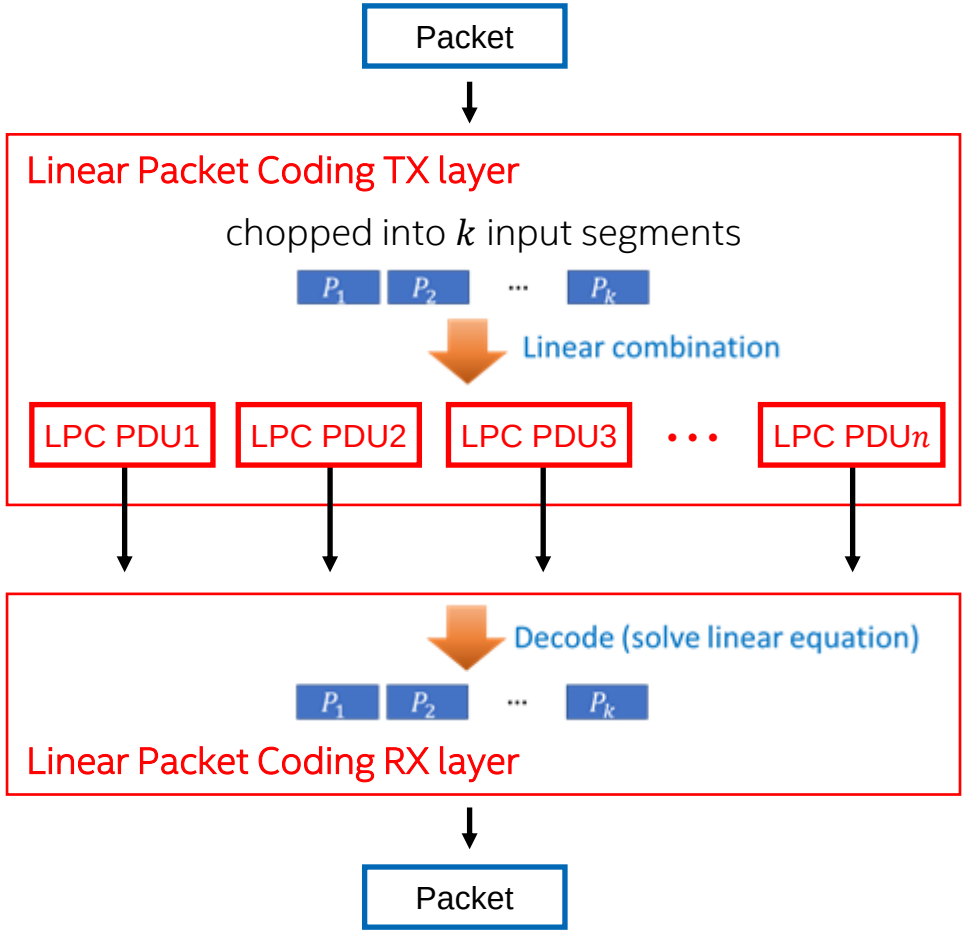

Summary and Rel-18 Study Item Proposal

Summary

- Linear Packet Coding has the potential to provide significant improvements to performance within the RAN
  - ✓ Achieving the same reliability target with less resources → high spectral efficiency and overall throughput increase
  - ✓ Performance lower bounded by "packet duplication" (i.e. repetition).
  - ✓ Allows efficient use of route diversity + trade-off between rate and reliability, useful for multi-route/multi-connectivity
  - ✓ In combination with retransmission, allows soft combining in upper layer (taking less resources than whole packet retx)
  - ✓ Per radio bearer + per packet decision – coding (e.g. if packet is large), or fallback to packet duplication
  - ✓ Overhead (~ 1%) / Little added complexity (linear operation, quick table look-up over finite field)

Rel-18 Proposal

- Initiate a study in RAN WGs with the following goals:
  - ✓ Identify and evaluate scenarios where linear packet coding approaches can be introduced with benefits
  - ✓ Identify architecture and protocol impacts for applying linear packet coding to various scenarios

Appendix / Back-up

LPC – Applicable Scenarios

URLLC/I-IoT where Rel-16 PDCP duplication can be applied

Multi-route/connectivity scenario such as IAB

- Placement above BAP
  - ✓ LPC transparent to UE
  - ✓ Intermediate IAB nodes can perform LPC operations

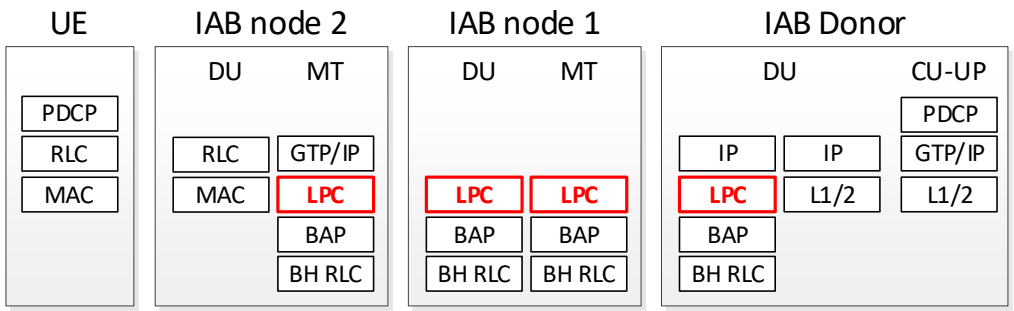

- Placement below PDCP
  - ✓ LPC transparent to IAB nodes
  - ✓ Requires UE to implement LPC (not possible for legacy UEs)

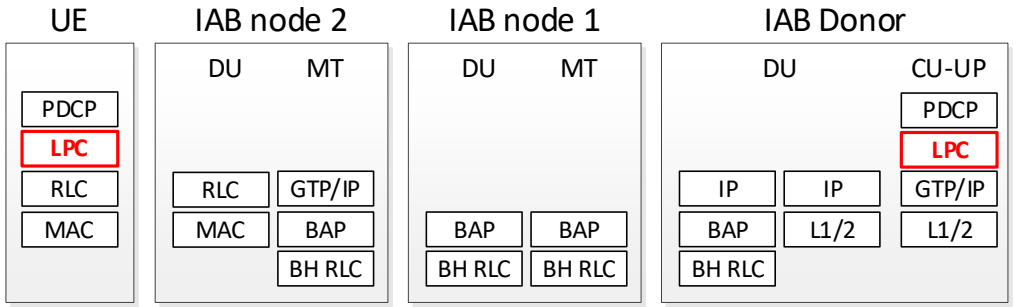

LPC – Encoding/Decoding

Linear combination of input segments (of a packet)

- A packet to be encoded is first chopped into k input segments $P_1, P_2, \cdots, P_k$ (of equal size), each expressed as vector over finite field $\mathbb{F}$
- Coefficients in finite field used for linear combination

Encoded segments (or blocks) : R_j (of equal size) $= \sum_{i=1}^{k} c_{ij} P_i, \quad c_{ij} \in \mathbb{F}$

- $[R_1, R_2, \cdots, R_n] = [P_1, P_2, \cdots, P_k][c_{ij}]_{k\times n}$, where $[c_{ij}]_{k\times n} = [\boldsymbol{c}_1, \boldsymbol{c}_2, \cdots, \boldsymbol{c}_n]$
- k/n: code rate (radio resource efficiency)

Received m coded segments (or blocks) $R_{j_1}, R_{j_2}, \cdots, R_{j_m}$

- $[R_{j_1}, R_{j_2}, \cdots, R_{j_m}] = [P_1, P_2, \cdots, P_k][\boldsymbol{c}_{j_1}, \boldsymbol{c}_{j_2}, \cdots, \boldsymbol{c}_{j_m}] = [P_1, P_2, \cdots, P_k]M$
- Transpose: $M^T \begin{bmatrix} P_1^T \\ \vdots \\ P_k^T \end{bmatrix} = \begin{bmatrix} R_{j_1}^T \\ \vdots \\ R_{j_m}^T \end{bmatrix}$
- $P_1, P_2, \cdots, P_k$ can be recovered (decoded) by matrix inversion (i.e. solving linear equations)

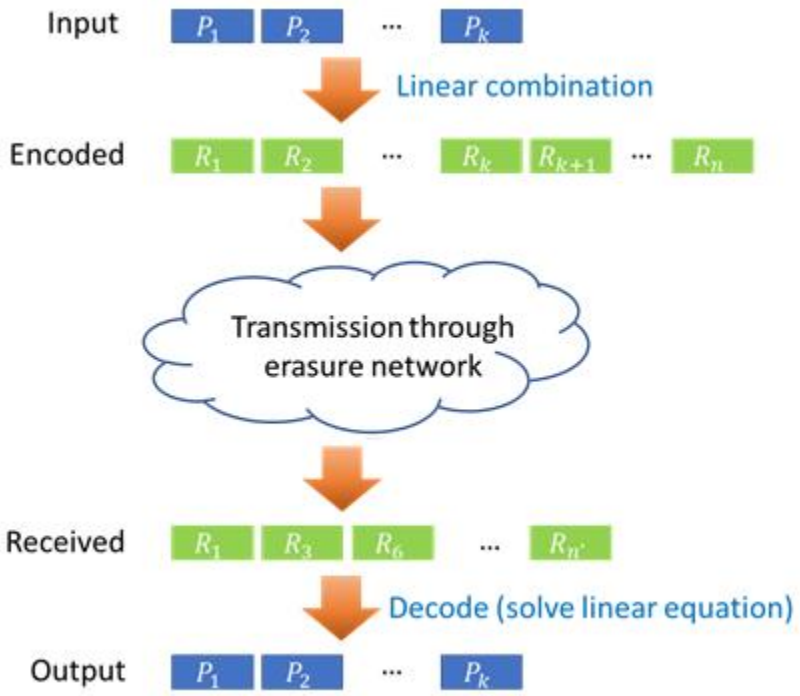

Simulation Result 1

Configuration

- One DRB; IP packet size = 1500 bytes
- 2 Links of identical characteristics:
  - Error prob. at HARQ Tx [0.2, 0.18, 0.16, 0.14]
  - After 3 HARQ reTx, roughly 10^{-3}
  - TBS per TTI = All links each 750 bytes
  - HARQ with 3 reTx, feedback delay of 4 TTI
- Hard delay deadline = 3 HARQ retx
- No RLC ARQ (RLC-UM); No PDCP reTx

Scheme compared

- Packet duplication vs LPC

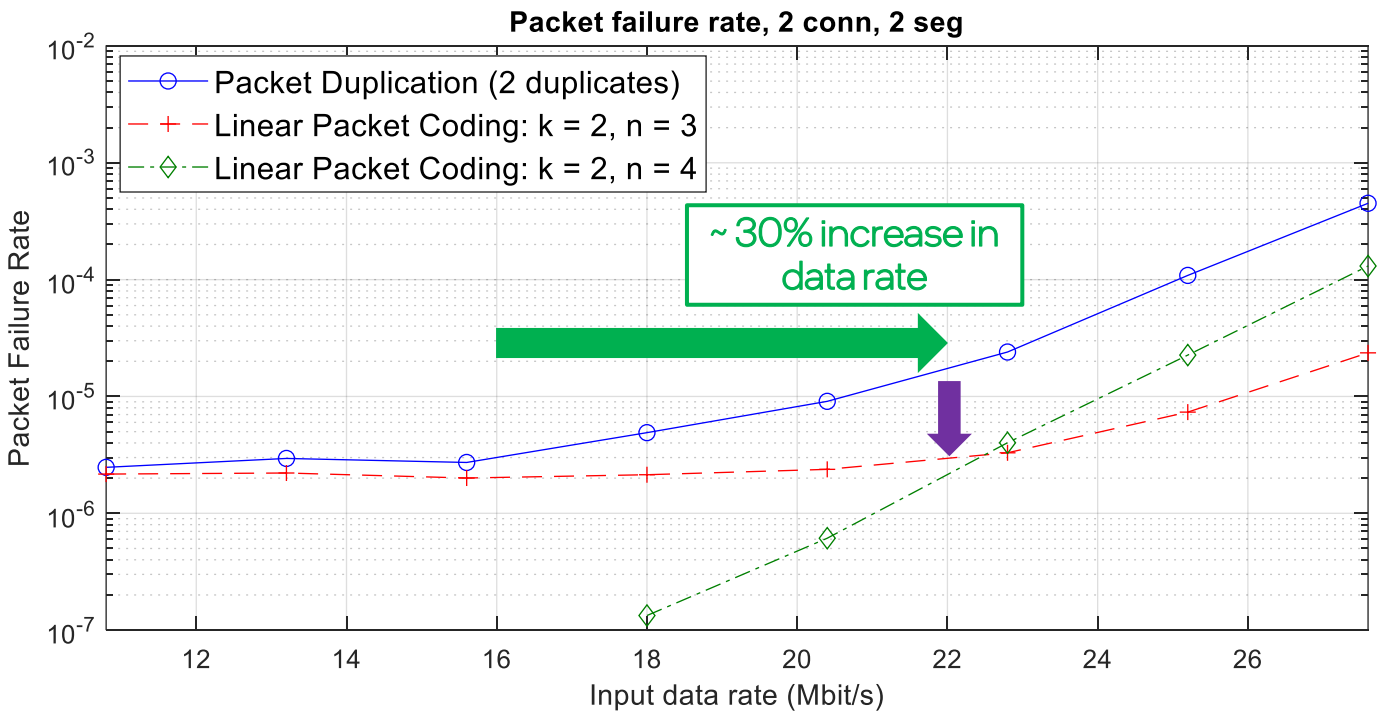

- Same radio resource efficiency (fix vertical) : Reliability ↑
- Same reliability target (fix horizontal) : resource efficiency ↑

Simulation Result 2

Configuration

- One DRB; IP packet size = 1500 bytes
- 2 Links of asymmetric characteristics:
  - Error prob. at HARQ Tx [0.2, 0.18, 0.16, 0.14]
  - After 3 HARQ reTx, roughly 10^{-3}
  - TBS per TTI:

    Link 1 (325 bytes), Link 2 (1025 bytes)
  - HARQ with 3 reTx, feedback delay of 4 TTI
- **Hard delay deadline** = 3 HARQ retx
- No RLC ARQ (RLC-UM); No PDCP reTx

Scheme compared

- Packet duplication vs LPC

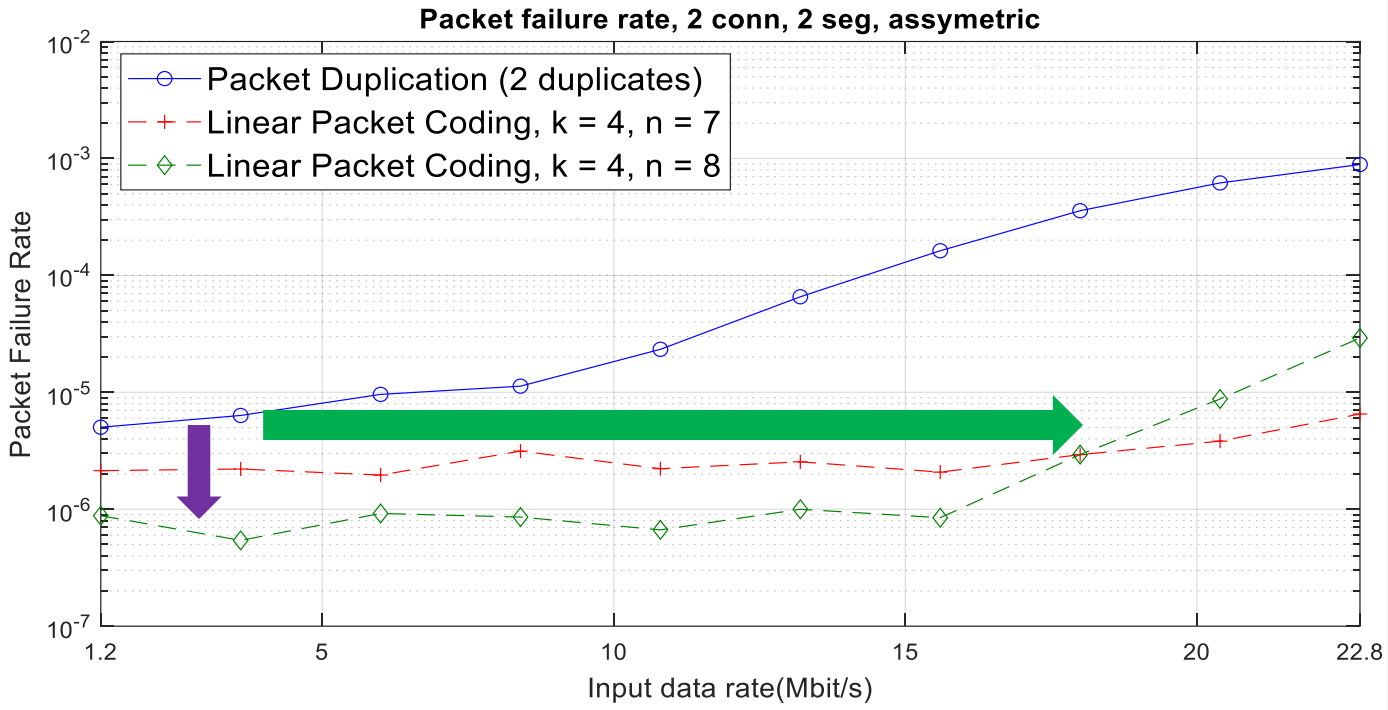

- Same radio resource efficiency (fix vertical) : Reliability ↑
- Same reliability target (fix horizontal) : resource efficiency ↑

Simulation Result 3

Configuration

- One DRB; IP Packet size = 1500 bytes
- 4 Links of identical characteristics:
  - Error prob at HARQ Tx [0.44, 0.42, 0.40, 0.37]
  - After 3 HARQ reTx, roughly 2.8 x 10^{-2}
  - TBS per TTI = All links each 375 bytes
  - HARQ with 3 reTx, feedback delay of 4 TTI
- Hard delay bound = 3 HARQ retx
- No RLC ARQ (RLC-UM); No PDCP reTx

Scheme compared

- Packet duplication vs LPC

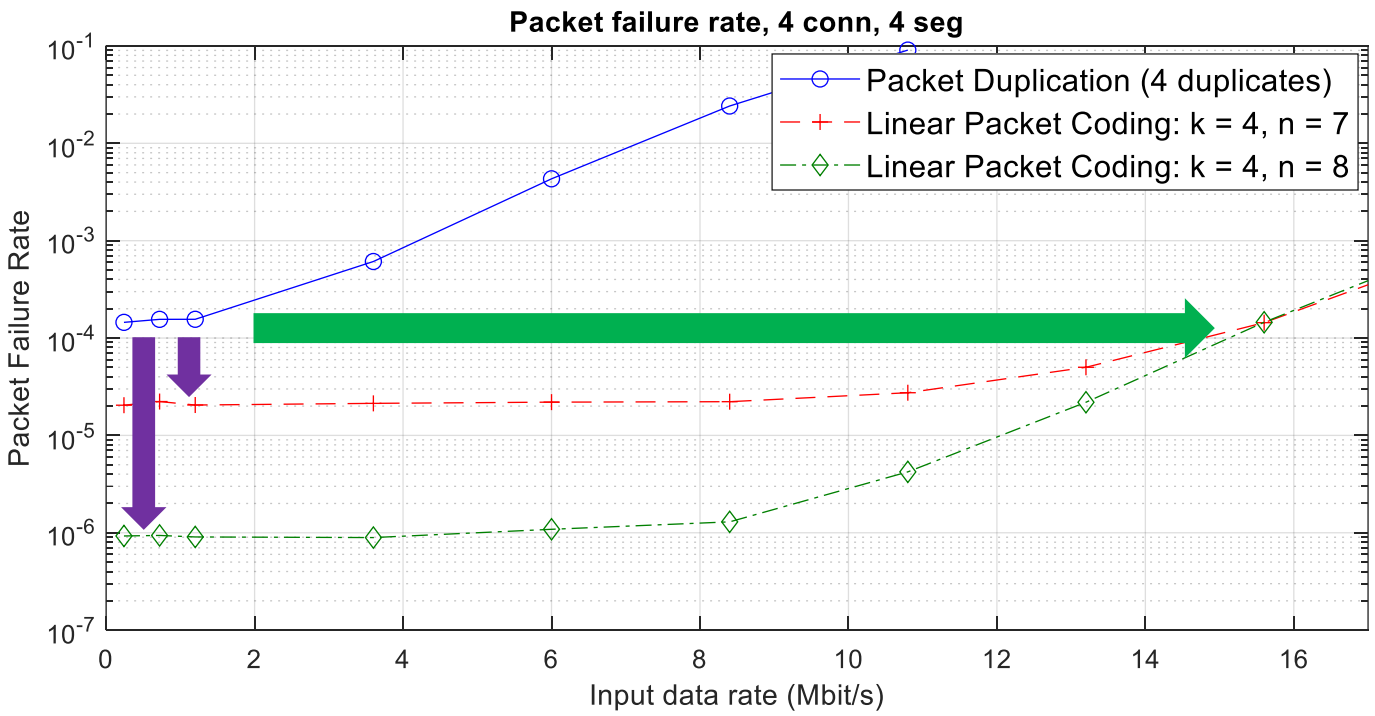

- Same radio resource efficiency (fix vertical) : Reliability ↑
- Same reliability target (fix horizontal) : resource efficiency ↑

intel®