SONY

Rel-18 RAN2 enhancements for XR

3GPP TSG RAN Rel-18 workshop

June 28-July 2, 2021

Agenda Item: 4.3

RWS-210364

Source: Sony

©2021 Sony Group Corporation

Flexible L2 header

- Figure shows the Rel-17 protocol stack:

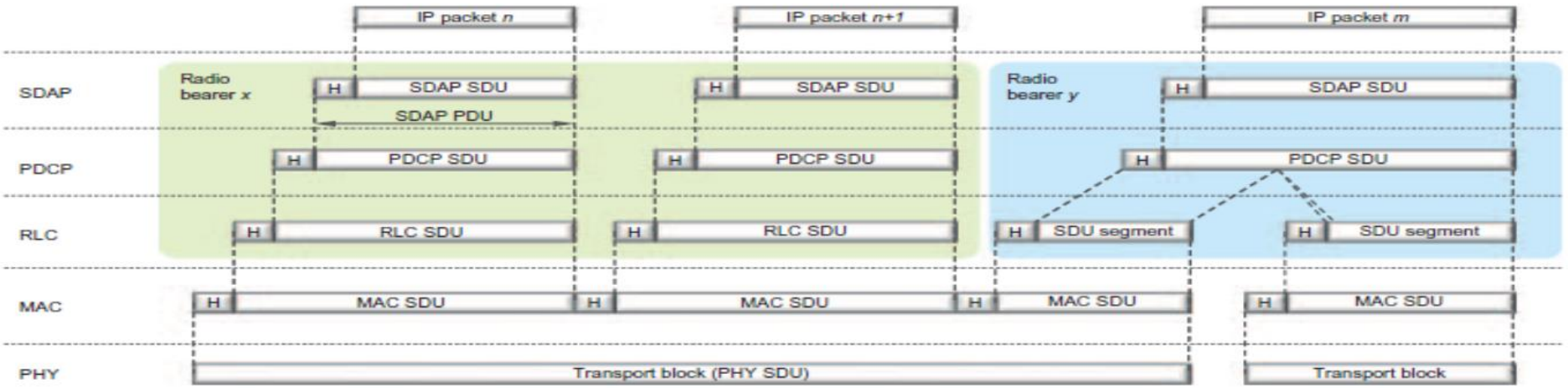

- Every MAC SDU generated has PDCP/RLC header in addition to MAC header.
- The existing L2 header design will impose heavy control signalling overhead as well as processing overhead especially in an extremely high throughput network.

©2021 Sony Group Corporation

Flexible L2 header

- The existing L2 header is not context aware to e.g. to adopt a proper header according to the scenario/requirement/deployment. For example, in case of no segmentation there may be information which can be optimised in the header.
- Figure below shows header overheads for duplication:

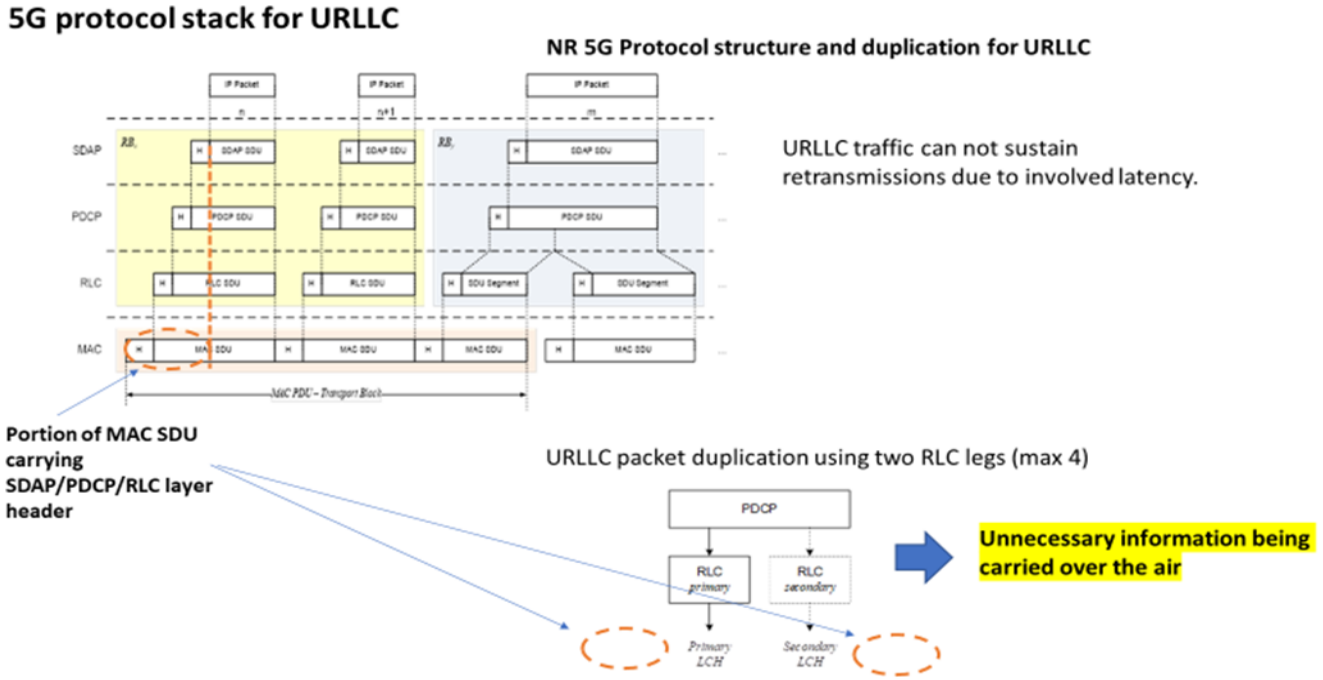

©2021 Sony Group Corporation

Flexible L2 header

Proposal for potential study areas:

- Design of L2 header with flexible format and adjustment of its format per packet if necessary.
- Context aware L2 header selection.

©2021 Sony Group Corporation

Other XR related enhancements

TCP ACK suppression

- 5Gbps DL traffic can generate around 60-90Mbps of UL TCP ACK traffic.
- Same situation will occur for heavy UL traffic and corresponding DL TCP ACK traffic.
- This is of concern with video streaming applications using progressive download where multiple video files are transferred.

Priority handling for I-frames

- Priority of critical data within a DRB was discussed for LTE but not agreed due to LTE PDCP behaviour.
- Such prioritisation should take place without discard of other packets

Proposal: RAN may start normative work on

- **TCP ACK enhancements**
- **Priority of critical message**

©2021 Sony Group Corporation

SONY

SONY is a registered trademark of Sony Group Corporation.
Names of Sony products and services are the registered trademarks and/or trademarks of Sony Group Corporation or its Group companies.
Other company names and product names are registered trademarks and/or trademarks of the respective companies.