3GPP TSG RAN Rel-18 workshop
Electronic Meeting, June 28 - July 2, 2021
Agenda Item: 4.2

RWS-210031

Qualcomm

On CPE Upper Layer Enhancements for Rel-18

Qualcomm

5G CPE/Fixed Wireless Access

Building on SA1 study and requirements

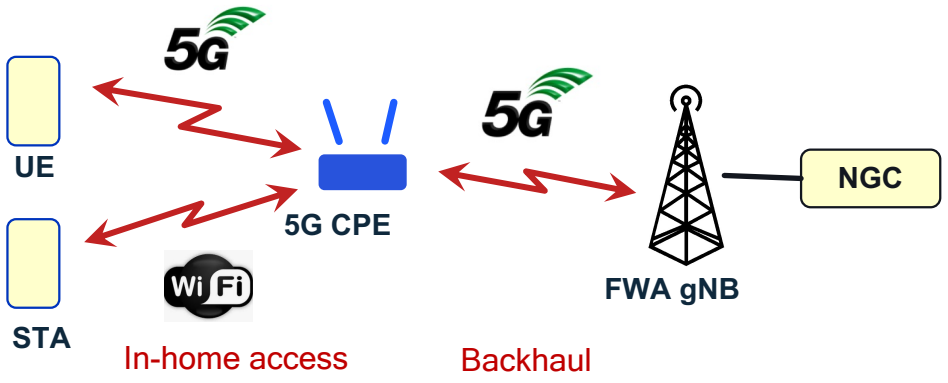

- CPE & Fixed Wireless Access

  Motivation:

  - SA1 has developed requirements on 5G access in home and 5G backhauling (FWA)
  - 3GPP has previously developed various technologies that can support 5G access and backhauling, but their suitability to the scenarios requires study (including gap analysis)

- Technical challenges include:
  - Architecture aspects: Layer 2 and layer 3 relay-like approaches are possible (including IAB)
    - Impact and suitability analysis of different options
  - Support for flexible end-to-end QoS management (including local RAN, backhaul, relay function)
  - Transport and signaling aspects including backhaul aggregation
  - Multi-PLMN support
  - Mobility aspects
  - Interworking with non-3GPP access
  - Interference / radio resource management

Aspects from SA1 Study: Enhancements for Residential 5G

- Some requirements from SA1 Study have critical impact on architecture selection
  - End-to-end QoS for local and macro traffic

    [PR 5.10.6-002] The 5G system shall support real time E2E QoS monitoring and control for any data traffic path (i.e. from/to a UE to/from the 5GC and to/from another UE) via a PRAS and an eRG when there is connectivity to the 5G system.
  - Routing efficiency for local traffic

    [PR. 5.4.6-001] The 5G system shall support routing efficiency for data traffic between a UE and a non-3GPP device through an Evolved Residential Gateway.
  - Service disruption due to non-local connectivity control

    [PR. 5.12.6-003] The 5G system shall minimize service disruption when a CPN communication path changes between two PRASes.
  - Scalability to large number of 5G-LAN-VNs

    [PR. 5.8.6-001] The 5G system shall be able to support large amounts of small 5G LAN-VNs targeting residential deployments.
  - RAN sharing

    [PR. 5.14.6-001] The 5G system shall be able to support PRAS sharing between multiple PLMNs.

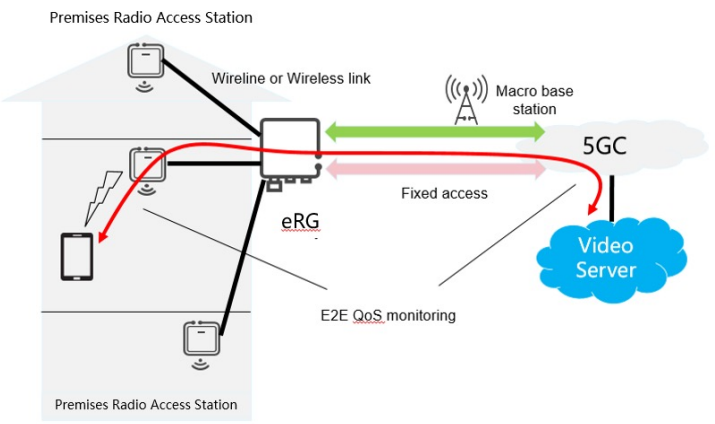

Figure 5.6.1-1. E2E QoS monitoring

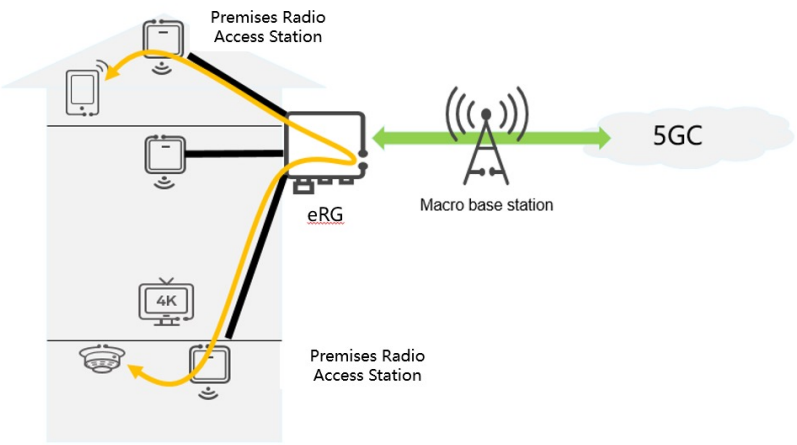

Figure 5.5.1-1: efficient routing for UE-to-UE communications via residential gateway

5G CPE/Fixed Wireless Access

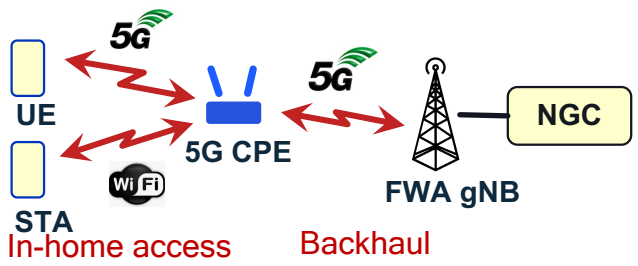

Possible study approach

- Define baseline architectures, e.g.
  - UE/gNB back-to-back for CPE
  - Native IAB
  - Hybrid architectures could also be considered (e.g. leveraging IAB functionality that can be applied outside of IAB)
- Define characteristics / evaluation factors such as:
  - End -to-end QoS management including both access and backhaul
  - Required Level of coordination between the macro gNB and the CPE's gNB/DU
  - Need for BH PLMN to be the same as the access PLMN
  - Management and transport of local traffic
  - Support for interference management between BH and access links
- Identify strengths / weaknesses of each architecture
- Identify functionality gaps and make normative recommendations as needed

Baseline Architectures

gNB/UE back-to-back

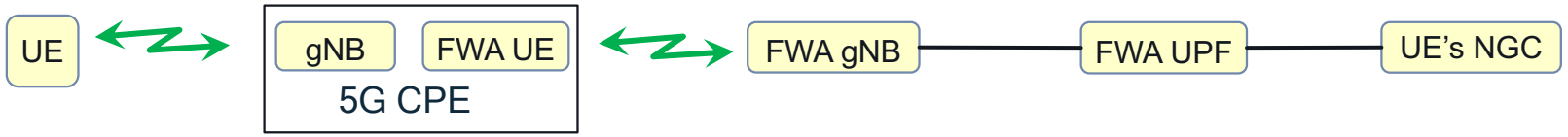

U-plane protocol stack

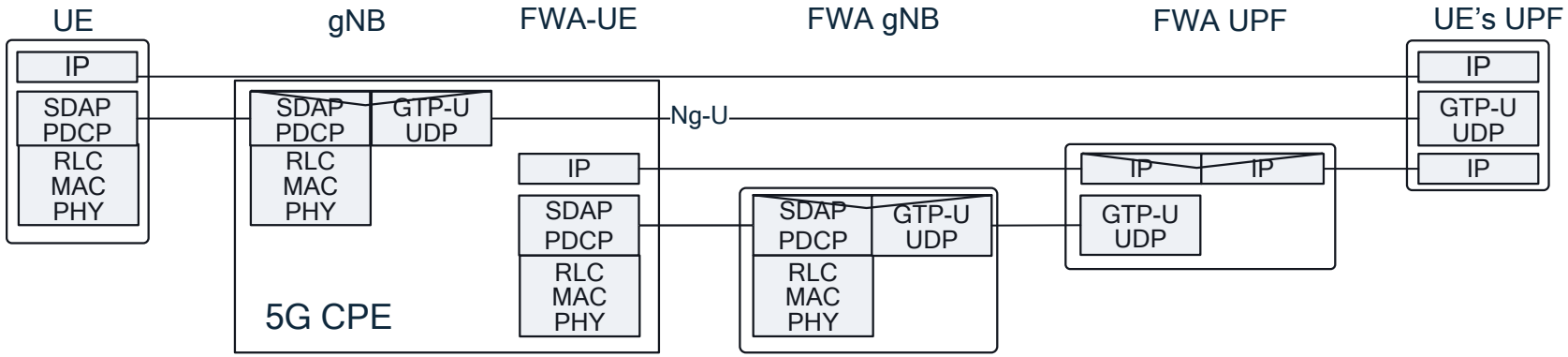

Native IAB

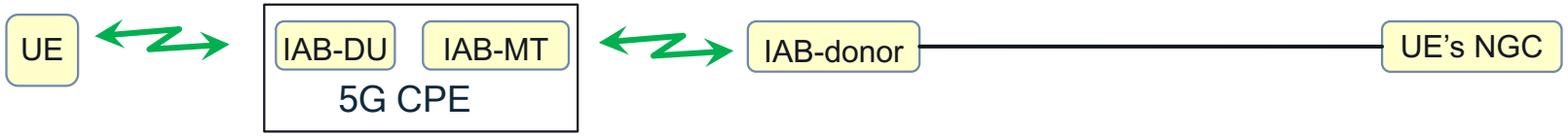

U-plane protocol stack

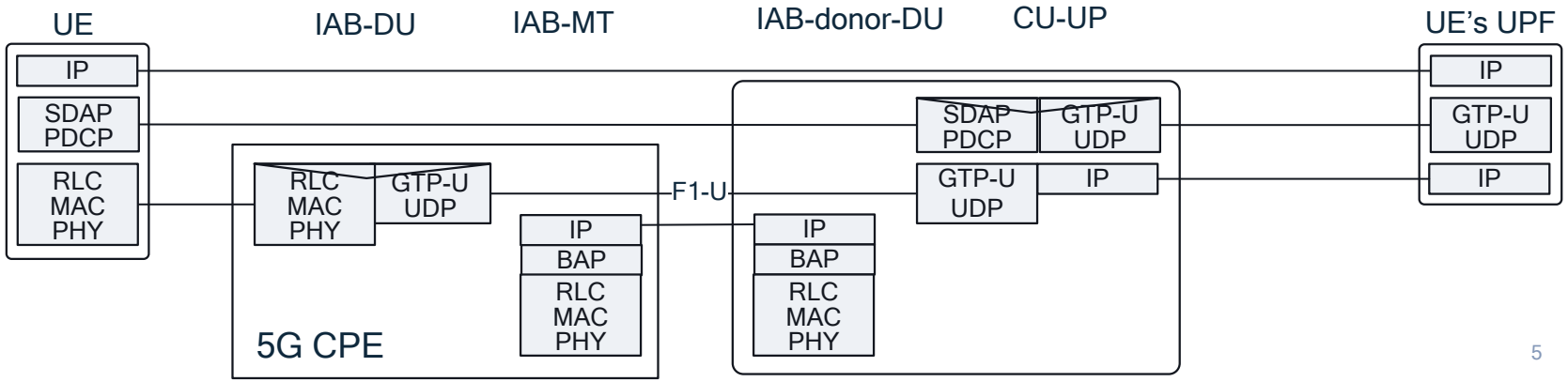

End-to-end QoS for Macro Traffic

- Requires UE/SDF-specific logical channel on the BH so that scheduler can differentiate SDFs of different UEs with same 5QI. This applies to 5G and non-3GPP access in home.
- Requires fine granular packet marking on UE's UPF to indicate high-QoS/low-latency flow to FWA RAN.

gNB/UE back-to-back

- Necessary extensions:
  - UE/flow-specific QoS on BH link
  - Fine-granular flow differentiation on Ng-U (e.g., using IPv6 Flow Label)
  - Support of E2E QoS monitoring

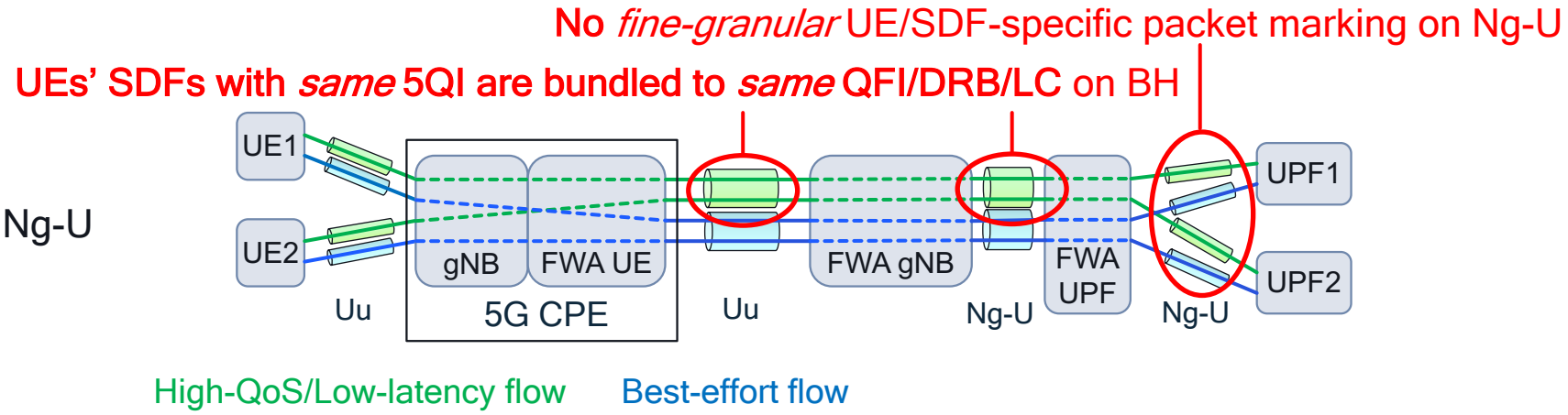

Native IAB

- Necessary extensions:
  - Fine-granular flow differentiation on Ng-U (e.g., using IPv6 Flow Label)
  - Support of E2E QoS monitoring

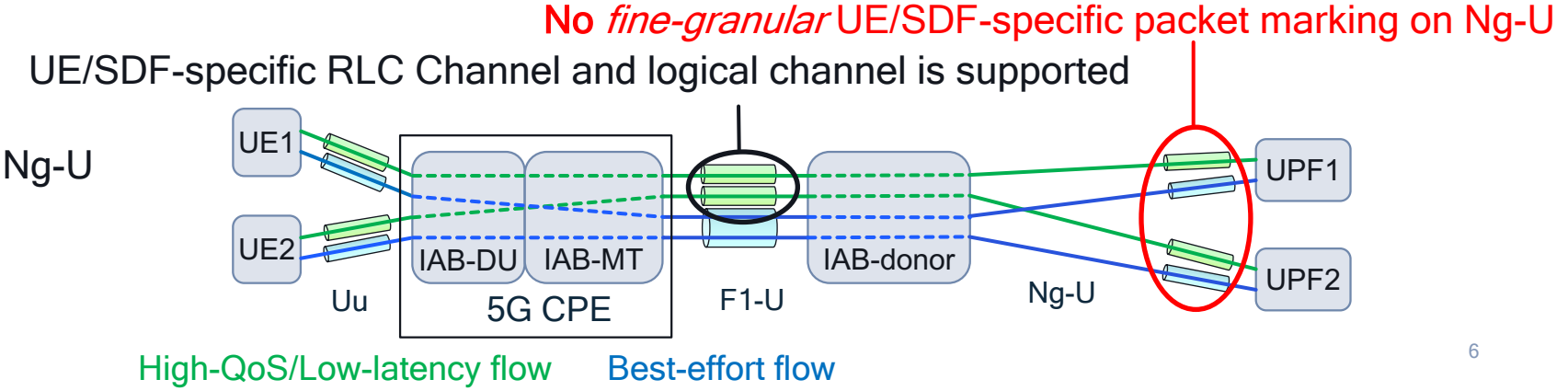

Coordination between Residential and FWA PLMNs

gNB/UE back-to-back

- Residential and FWA RANs may remain completely independent.
  - No mutual agreements necessary if operated by different PLMNs
  - It needs to be discussed how coordination is achieved for E2E QoS and radio resource management (see later slide) between residential and FWA RANs.

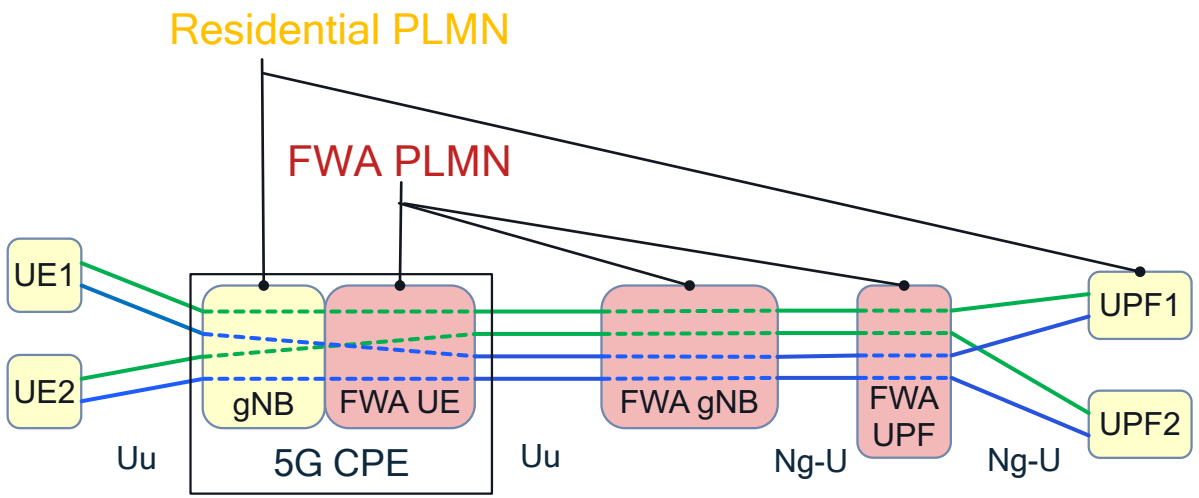

Native IAB

- RAN-sharing or roaming agreements necessary between PLMNs
  - No obvious way to separate management of IAB-DU and IAB-MT between different PLMNs.

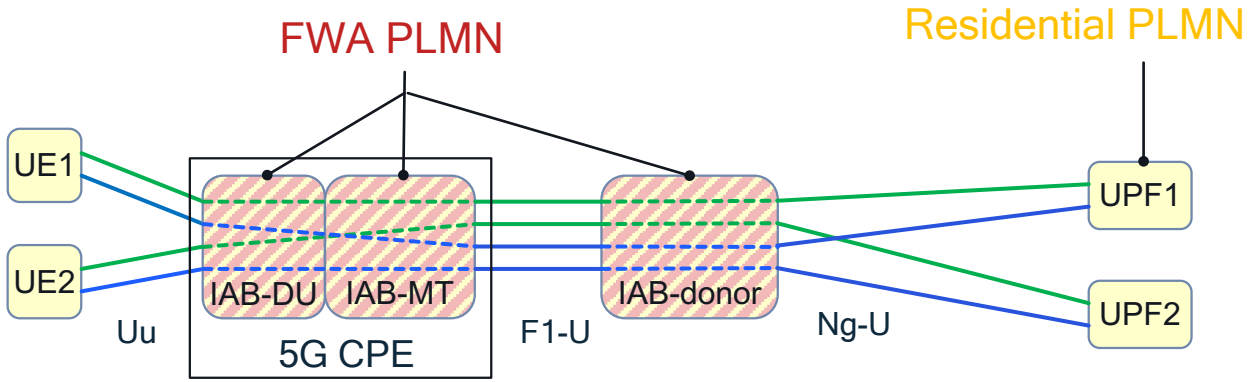

Management and Transport of Local Traffic

- Local traffic should be efficiently routed, i.e., remain within home network.
- Signaling should have high priority and remain local for better scalability and reduced service interruption.

gNB/UE back-to-back

- Necessary extensions:
  - Support of higher priority for signaling traffic over data traffic on FWA BH
- Local RAN management of local traffic.

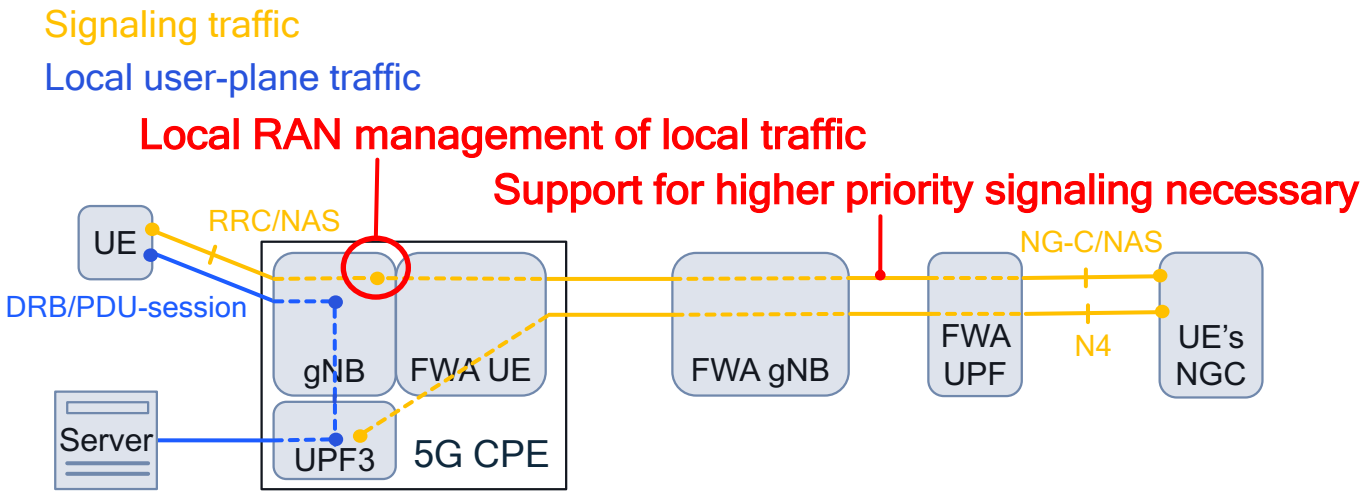

Native IAB

- Necessary extensions:
  - LBO with local CU-UP and UPF on IAB-node
- Centralized RAN management of local traffic

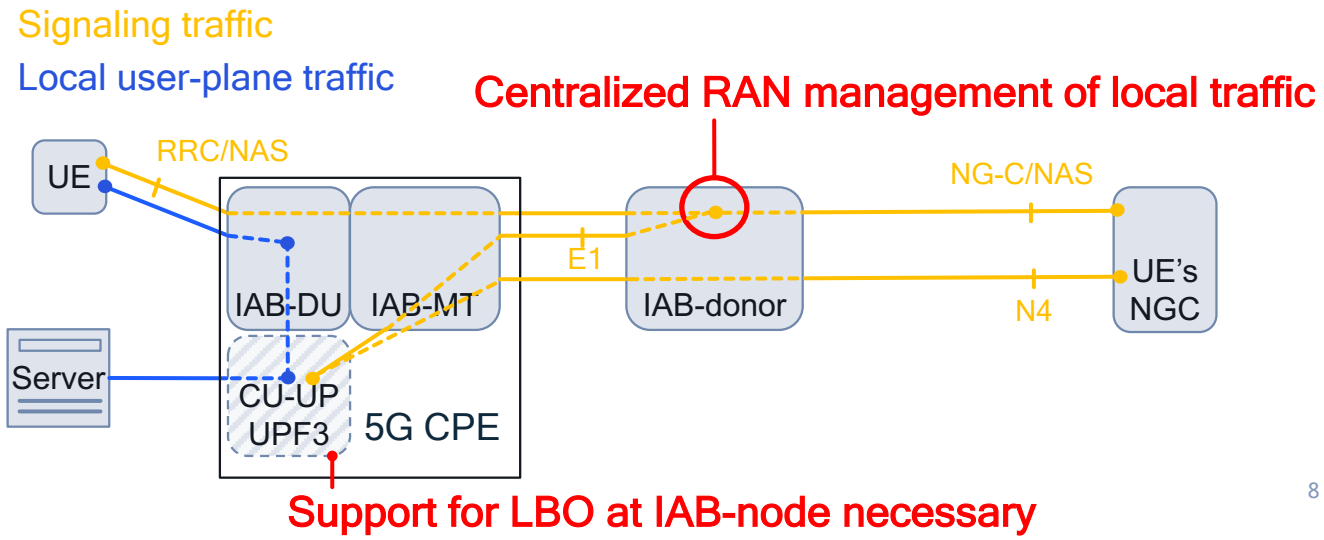

Multiplexing of Radio Resources for In-band Operation

gNB/UE back-to-back

- Presently, supports only course radio-resource multiplexing between access and backhaul with granularity of bands or, potentially, CCs.

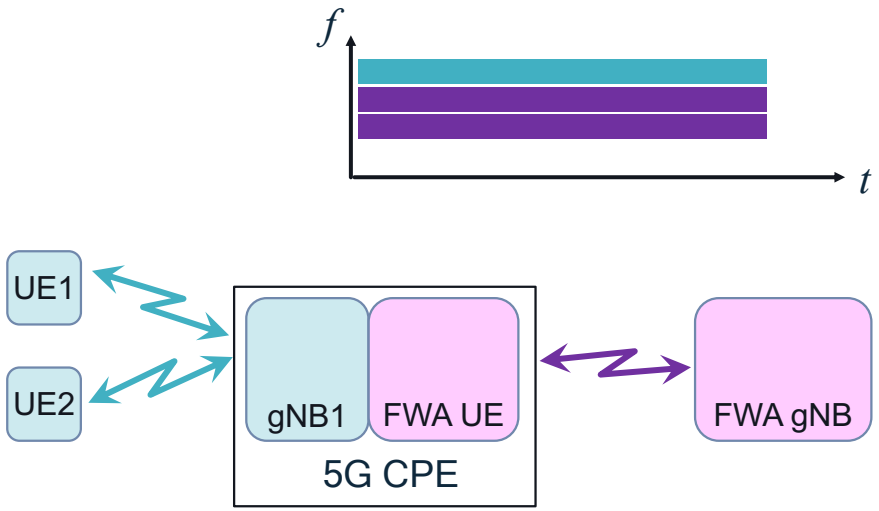

Native IAB

- Can leverage IAB's fine-granular TDM/FDM radio-resource multiplexing with symbol/RB granularity.

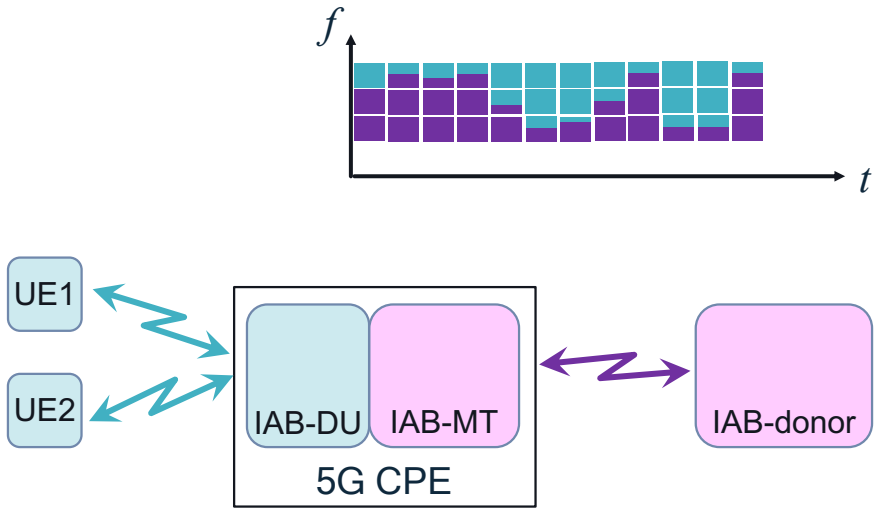

5G CPE/Fixed Wireless Access

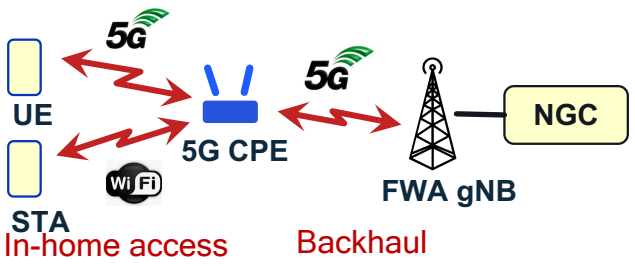

Summary

- From the analysis of the baseline architectures:
  - Both exhibit functionality gaps
  - Each of them may be suitable to particular scenarios
- Study can consider additional architectures using above as reference points
  - Using the requirements and scenarios from SA1 for evaluation
- Overall, the topic seems well suited for a RAN3 led study
  - Interaction with SA2 likely to be needed mainly in the QoS area
  - **Goal: identify and evaluate BH options, and identify normative work to address the functional gaps**

Qualcomm

Thank you

Follow us on:

For more information, visit us at:

www.qualcomm.com & www.qualcomm.com/blog

Nothing in these materials is an offer to sell any of the components or devices referenced herein.

©2018-2020 Qualcomm Technologies, Inc. and/or its affiliated companies. All Rights Reserved.

Qualcomm and Snapdragon are trademarks of Qualcomm Incorporated, registered in the United States and other countries. Other products and brand names may be trademarks or registered trademarks of their respective owners.

References in this presentation to “Qualcomm” may mean Qualcomm Incorporated, Qualcomm Technologies, Inc., and/or other subsidiaries or business units within the Qualcomm corporate structure, as applicable. Qualcomm Incorporated includes Qualcomm’s licensing business, QTL, and the vast majority of its patent portfolio. Qualcomm Technologies, Inc., a wholly-owned subsidiary of Qualcomm Incorporated, operates, along with its subsidiaries, substantially all of Qualcomm’s engineering, research and development functions, and substantially all of its product and services businesses, including its semiconductor business, QCT.

BACKUP

Source sample text

Architecture options

Option 1:

- Access and BH use separate RAN.
- Access-PLMN's Ng-U is transported over BH-PLMN's PDU session

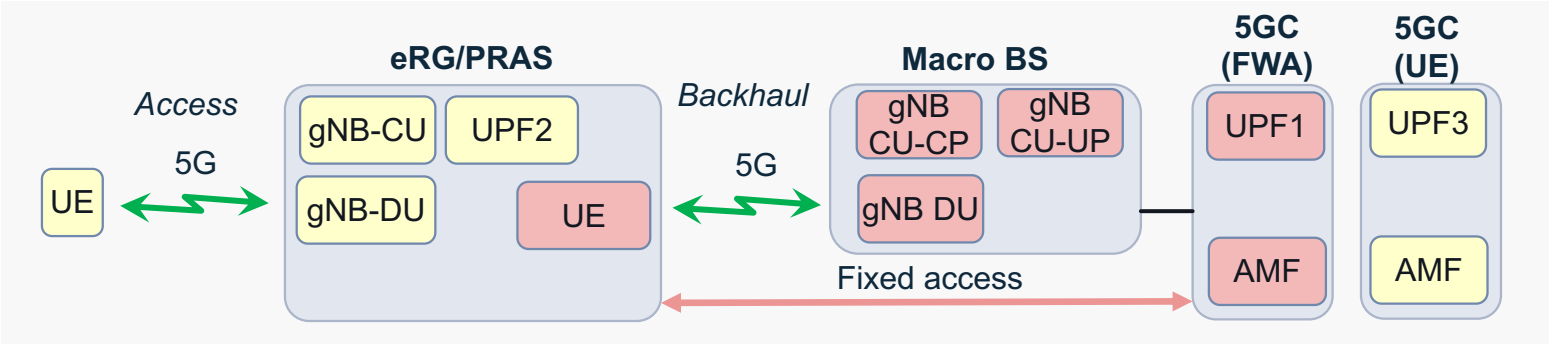

Option 2:

- Access and BH use separate RAN.
- Access-PLMN's Ng-U is transported over BH-PLMN's IP/BAP.

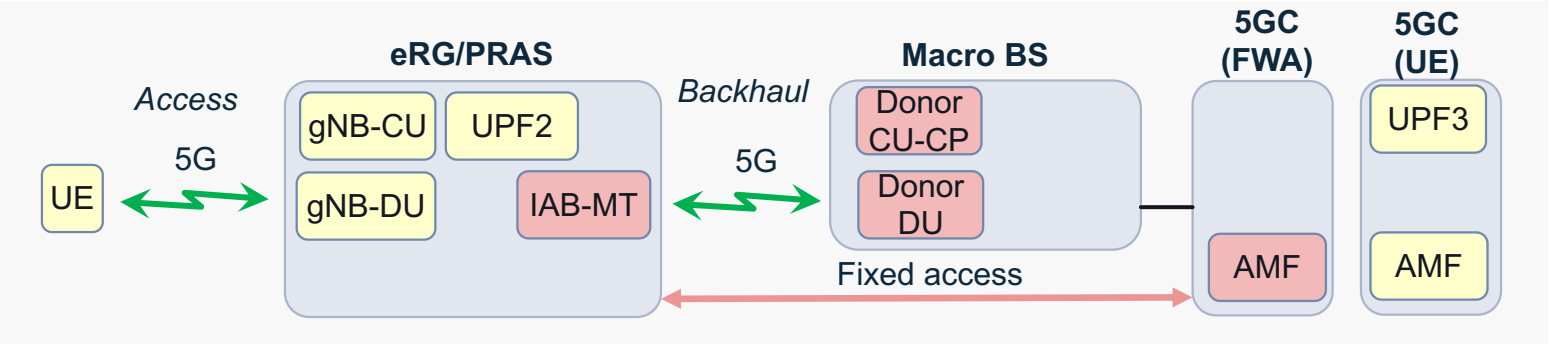

Option 3:

- Access and BH use separate RAN.
- Access PLMN's F1-U is transported over BH PLMN's IP/BAP.

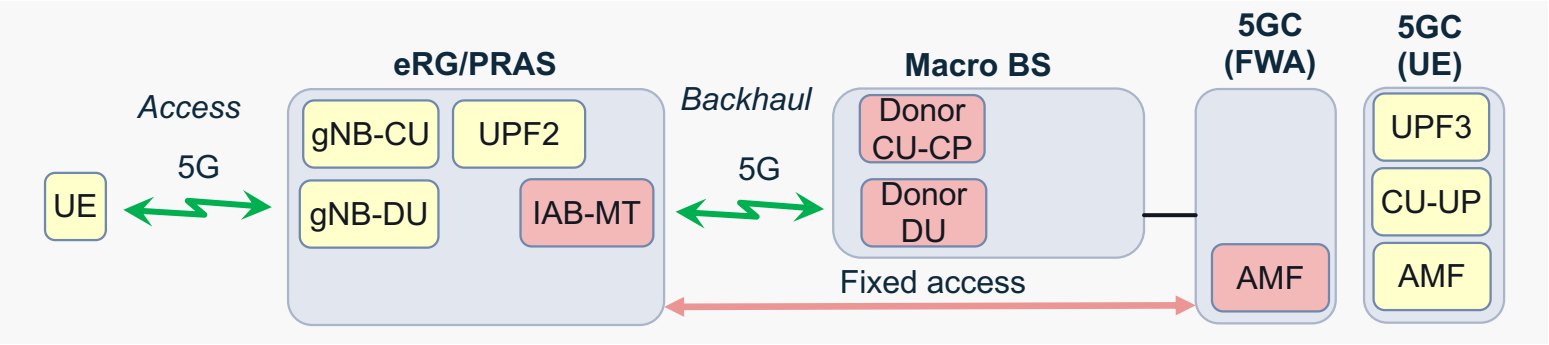

Option 4:

- Access and BH share a common RAN using native IAB.
- Access PLMN's F1-U is transported over BH PLMN's IP/BAP.

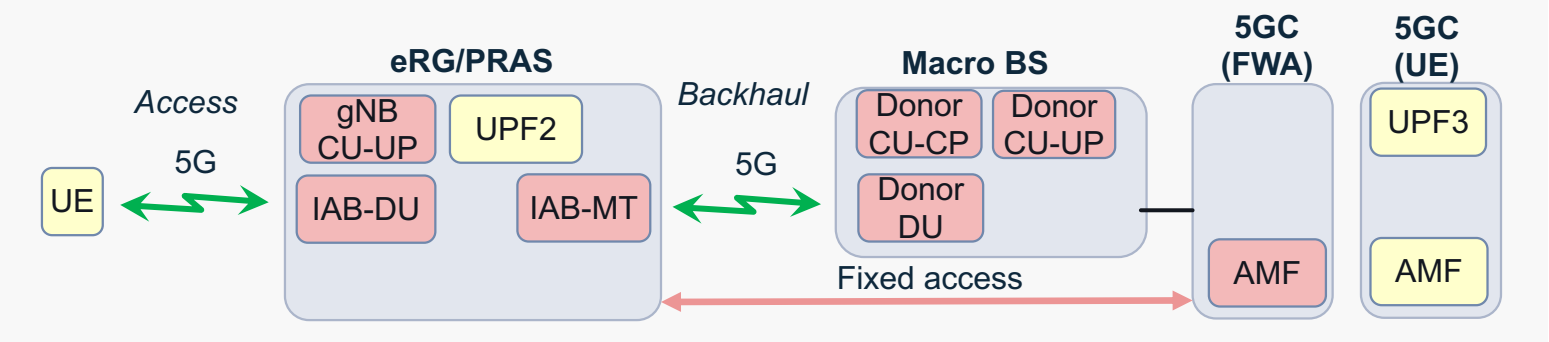

U-plane Protocol Stacks for Macro Traffic

Option 1:

- Access and BH use separate RAN.
- Access-PLMN's Ng-U is transported over BH-PLMN's PDU session

Option 2:

- Access and BH use separate RAN.
- Access-PLMN's Ng-U is transported over BH-PLMN's IP/BAP.

Option 3:

- Access and BH use separate RAN.
- Access PLMN's F1-U is transported over BH PLMN's IP/BAP.

Option 4:

- Access and BH share a common RAN using native IAB.
- Access PLMN's F1-U is transported over BH PLMN's IP/BAP.

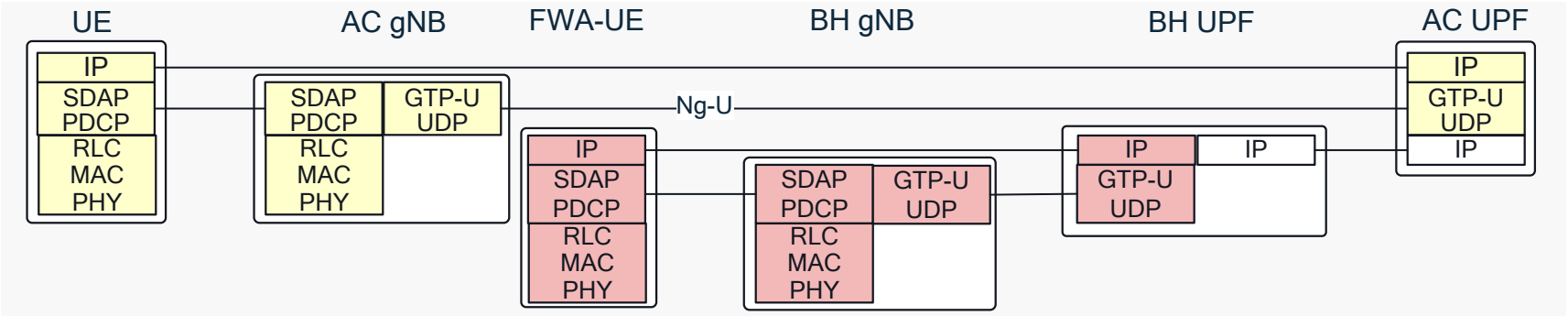

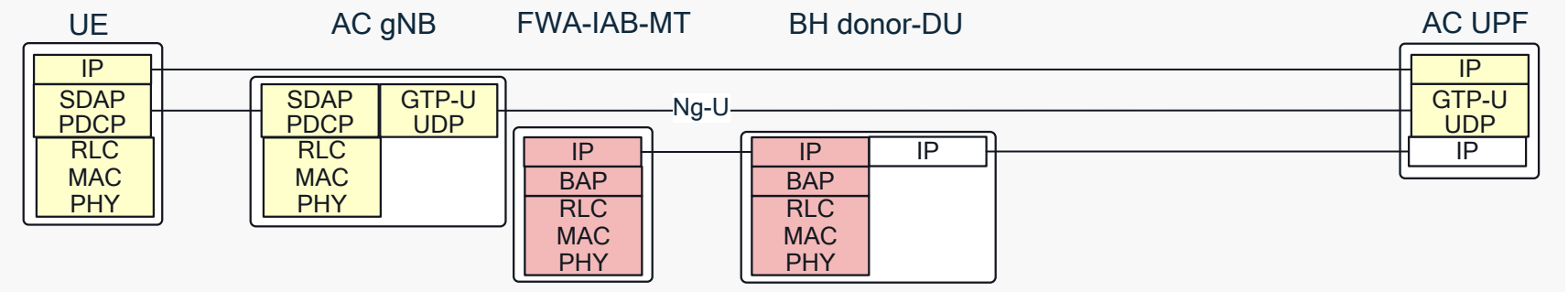

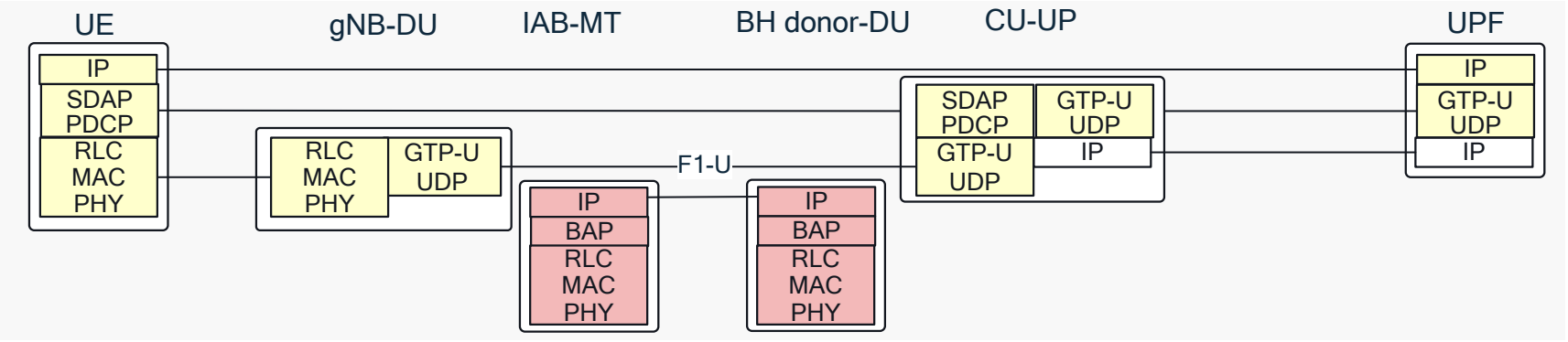

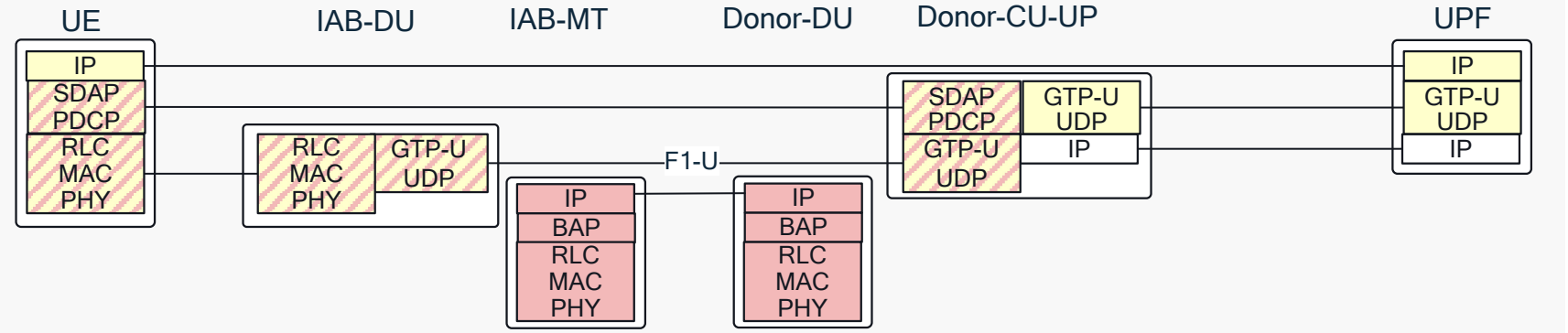

Flow-based E2E QoS

Option 1:

- Access and BH use separate RAN.
- Access-PLMN's Ng-U is transported over BH-PLMN's PDU session

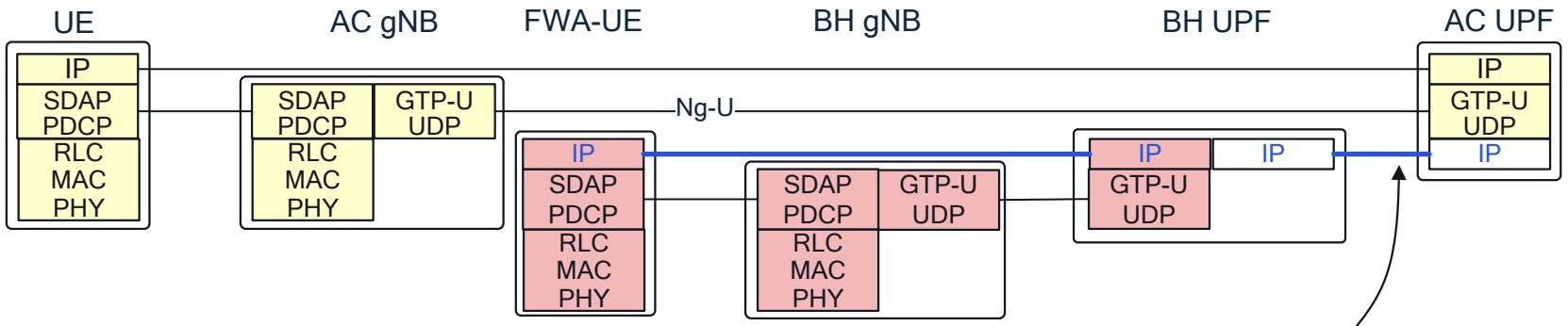

- Flow needs to be marked on IP layer:
  - IPv6 FL: presently not supported
  - DSCP: range is not large enough.

- Enhancements to be considered
  - AC network must be able to mark IP header for specific E2E flow.
    - DSCP: supported, but range is not large enough
    - IPv6 Flow Label: not supported, but range is large enough.
  - AC network must be able to request, e.g., via FWA-UE's NAS, from the BH CN a flow with:
    - Standardized 5QI but flow-specific PDB.
    - Allocation of flow-specific QFI (so that the BH RAN can allocate a separate DRB/LC)
    - IP header specific markings, e.g., DSCP value/IPv6 Flow Label value so that the BH UPF can map the IP header to a specific QFI.
  - SMF must be able to configure the mapping between QFI/IP header marking on UPF and include PDB requested by FWA-UE to BH RAN.
  - Transport:
    - DL: UPF maps IPv6 FL to QFI, which is then mapped by Macro BS to dedicated DRB/LC. On eRG, IPv6 FL is mapped to access flow.
    - UL: AC gNB sets IPv6 FL for specific access flow. FWA-UE maps IPv6 FL to DRB/LC.

Flow-based E2E QoS

Option 2:

- Access and BH use separate RAN.
- Access-PLMN's Ng-U is transported over BH-PLMN's IP/BAP.

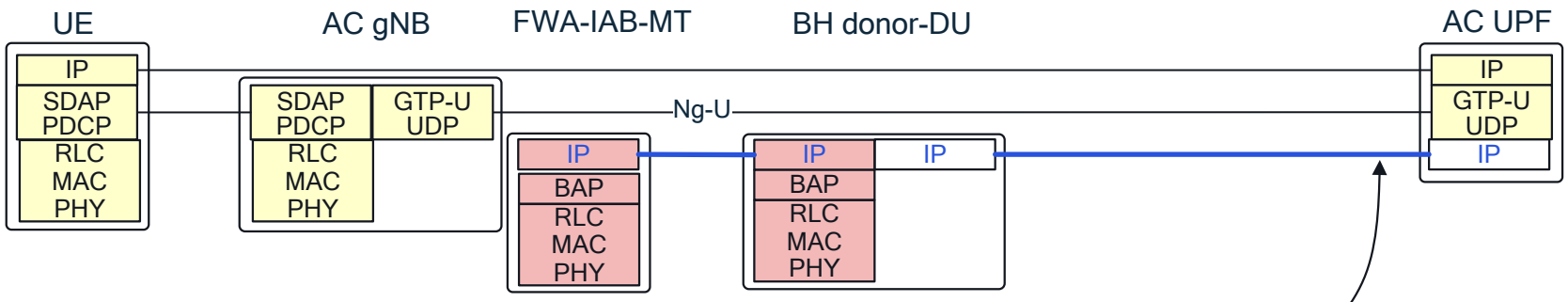

- Flow must be marked on IP layer:
  - IPv6 FL: presently not supported
  - DSCP: range is not large enough.

- Enhancements to be considered
  - AC network must be able to mark IP header for specific E2E flow.
    - DSCP: supported, but range is not large enough
    - IPv6 Flow Label: not supported, but range is large enough.
  - AC network must be able to request from BH donor-CU-CP, e.g., via FWA-IAB-MT's RRC, for a specific AC RLC channel a corresponding a BH RLC channel with:
    - Specific QoS and PDB
    - Specific Dst IP address, DSCP/IPv6 FL (for mapping of DL packets to BH RLC channel)
  - BH donor CU-CP must be able to configure:
    - BH RLC CH with IAB-MT.
    - Potentially DSCP/IPv6 FL (if not forwarded in request)
  - Transport:
    - DL: Donor DU maps Dst IP address, IPv6 FL to the BH RLC CH. On eRG, IPv6 FL is mapped to access flow.
    - UL: AC gNB sets IPv6 FL for specific access flow. FWA-UE maps IPv6 FL to LC. Potentially, IAB UL mapping could be leveraged as well.

Flow-based E2E QoS

Option 3:

- Access and BH use separate RAN.
- Access PLMN's F1-U is transported over BH PLMN's IP/BAP.

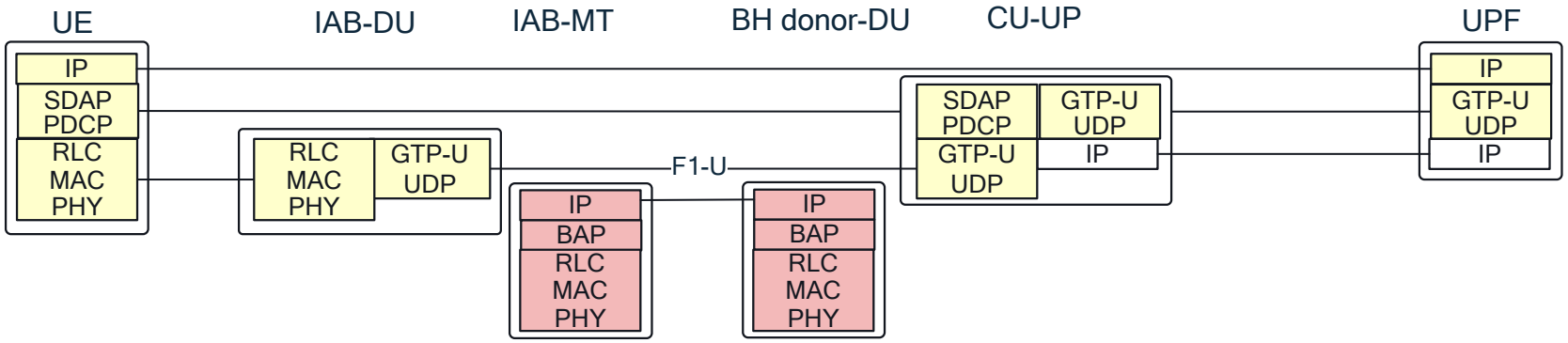

- Enhancements to be considered
  - AC network must be able to request from BH donor-CU-CP, e.g., via FWA-IAB-MT's RRC, for a specific AC RLC channel a corresponding a BH RLC channel with:
    - Specific QoS and PDB
    - Specific Dst IP address, DSCP/IPv6 FL (for mapping of DL packets to BH RLC channel)
  - BH donor CU-CP must be able to configure:
    - BH RLC CH with IAB-MT.
    - Potentially DSCP/IPv6 FL (if not forwarded in request)
  - Transport:
    - DL: Donor DU maps Dst IP address, IPv6 FL to the BH RLC CH. On eRG, IPv6 FL is mapped to access flow.
    - UL: AC gNB sets IPv6 FL for specific access flow. FWA-UE maps IPv6 FL to LC. Potentially, IAB UL mapping could be leveraged as well.

Flow-based E2E QoS

Option 4:

- Access and BH share a common RAN using native IAB.
- Access PLMN's F1-U is transported over BH PLMN's IP/BAP.

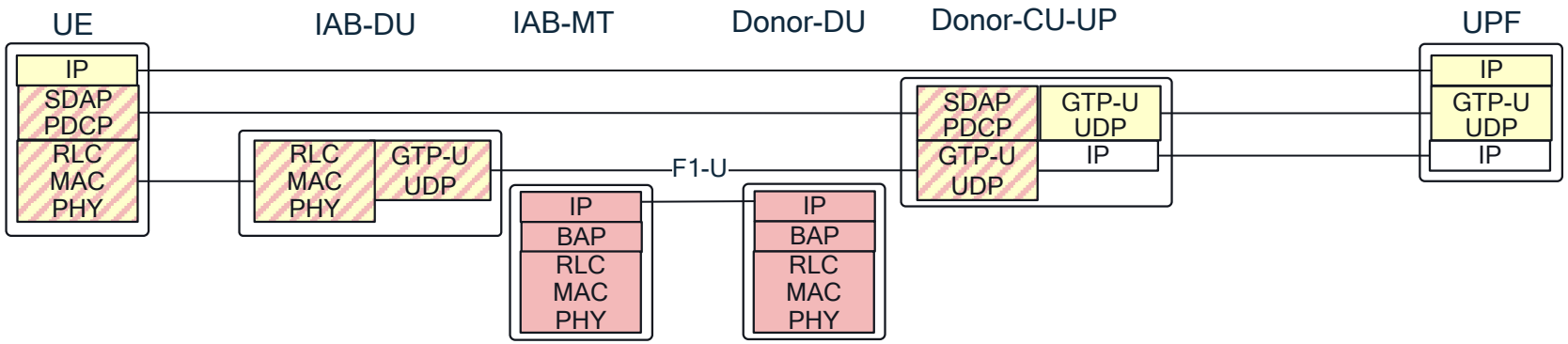

- Enhancements to be considered
  - Rel-16/17 IAB operation already supports flow-based E2E QoS

In-band Operation of Access and Backhaul

- Problem
  - Radio resources need to be coordinated between access and backhaul links to address half duplexing constraint on eRG/PRAS.
  - TBD: coordination of CLI management between access and BH links.
- Option 4
  - Can use Rel-16/17 IAB resource multiplexing framework.
- Options 2, 3
  - Can use Rel-16/17 IAB resource multiplexing framework
  - Requires extensions for inter-CU-CP coordination. Could adopt framework developed for inter-donor topology adaptation. Xn-based signaling could be migrated to RRC.
- Options 1
  - Can adopt IAB-based resource multiplexing solutions of options 2/3.
  - Requires support of IAB-functionality by FWA-UE and macro-RAN.

Comparison	Option 1	Option 2	Option 3	Option 4
Characteristics	• Access NG-U is transported over BH PDU session. • Access and BH have separate CUs. • Access CU is local.	• Access NG-U is transported over IP/BAP. • Access and BH have separate CUs. • Access CU is local.	• Access F1-U is transported over IP/BAP. • Access and BH have separate CUs. • Access CU-CP is local, CU-UP is centralized.	• Access F1-U is transported over IP/BAP. • Uses native IAB • Access and BH share same CU-CP, which is centralized.
Flow-based E2E QoS	Requires the following extensions: • TNL packet marking by AC UPF to be extended to IPv6 Flow Label. • Support for flow-specific QCI and PDB, based on NAS request. • Flow identification on PDU session at BH UPF based on IPv6 Flow Label.	Requires the following extensions: • TNL packet marking by AC UPF to be extended to IPv6 Flow Label. • RRC-based BH RLC CH request incl. QoS, PDB and associated IPv6 Flow Label.	Requires the following extensions: • RRC-based BH RLC CH request incl. QoS, PDB and associated IPv6 Flow Label.	Natively supported by IAB
In-band operation of access and backhaul	Can leverage IAB with the following extensions: • Migrating Rel-17 inter-CU-CP coordination on gNB-DU resource allocation to RRC. • Requires donor support on macro gNB and IAB-MT functionality on FWA UE.	Can leverage IAB with the following extensions: • Migrating Rel-17 inter-CU-CP coordination on gNB-DU resource allocation to RRC.	Can leverage IAB with the following extensions: • Migrating Rel-17 inter-CU-CP coordination on gNB-DU resource allocation to RRC.	Natively supported by IAB
Access PLMN different from BH PLMNs	Access and BH can be operated by different PLMNs.	Access and BH can be operated by different PLMNs.	Access and BH can be operated by different PLMNs.	Access and BH PLMNs must share RAN or have roaming agreements.
Impact of local traffic on macro-RAN	• UP traffic can be routed locally. • RRM and CP signaling is handled locally.	• UP traffic can be routed locally. • RRM and CP signaling is handled locally.	• UP traffic can be routed locally. • RRM and CP signaling is handled locally.	• UP traffic can be routed locally. • RRM and CP signaling via macro-RAN.

XXX: RAN impact XXX: SA2 impact

Summary

- Support for flow-based E2E QoS and in-band operation of access and backhaul
  - Architecture 1, 2, 3: enhancements are necessary.
  - Architecture 4: natively supported.
- 5G access PLMN different from backhaul PLMN
  - Architecture 1, 2, 3: allow different PLMNs to operate access and BH RAN.
  - Architecture 4: requires RAN sharing or roaming agreements between access and BH operators.
- Local traffic has no impact on backhaul signaling and user plane
  - Architecture 1, 2, 3: Supported and signaling and user plane
  - Architecture 4: Only supported on user plane
- Take away
  - Each architecture may suit a specific deployment scenario. For that reason, all architectures should be supported.
  - Enhancements for flow-based E2E QoS in architectures 1, 2 and 3 are straightforward and should be considered.
  - Enhancements for in-band operation in architectures 1, 2, and 3 may not be less critical since the same operator is expected to manage access and backhaul RAN in this case, which makes architecture 4 a suitable candidate.