3GPP TSG RAN Rel-18 workshop
Electronic Meeting, June 28 - July 2, 2021
Agenda Item: 4.3

RWS-210028

Qualcomm

On Coding Evolution for Rel-18 & beyond

Qualcomm

Type of coding considered in this presentation

- We will consider candidate techniques that have the following attributes
  - (1) The successful transfer of information from-transmitter-to-receiver is conditioned on the assumption that some part of the encoded information is known to the intended receiver
    - Either because the receiver had already successfully decoded it or because it was self-generated by the receiver
    - The transmitter may or may not know the exact part of the information that the receiver has available
  - (2) The decoding related operation is discrete. For example, the receiver input is {'0', '1', 'erased'}, or the receiver input is {GF(N), 'erased'}, etc.
    - In other words, the receiver operation follows a prior channel decoding step that has already converted LLRs to binaries
  - (3) The input to the receiver is assumed perfectly reliable
    - Ensured by interim CRC check
- We will not consider techniques belonging to the following categories
  - New channel coding
  - Hierarchical modulation/coding, UEP
  - Bit-division multiplexing, NOMA

Network coding / Outer code

- Attributes (1), (2), (3) hold for both network coding and outer code

- The main difference is
  - For Network Coding, we assume that the known part of the information may have come from the same or from a different link
  - For Outer Coding, we assume that the known part of the information have come from the same link

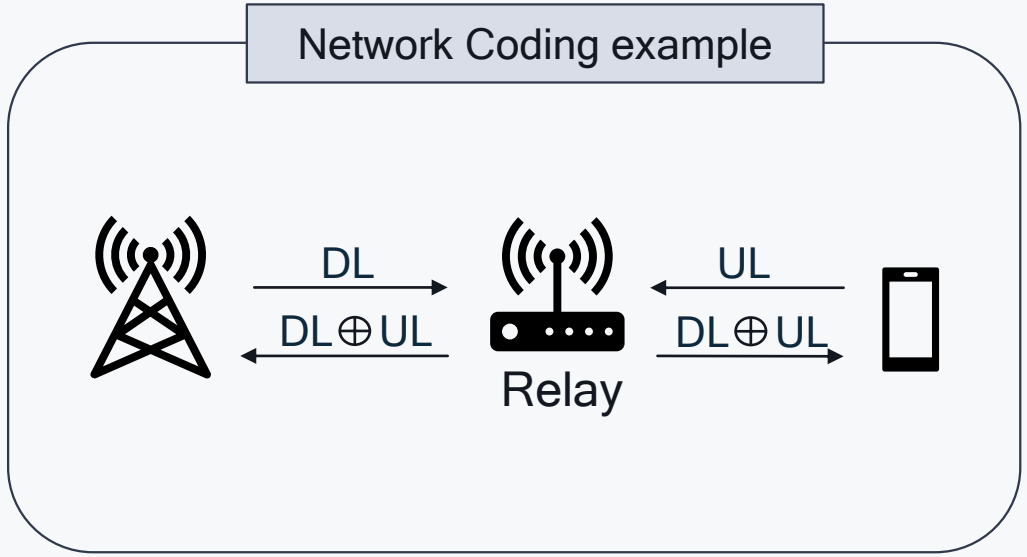

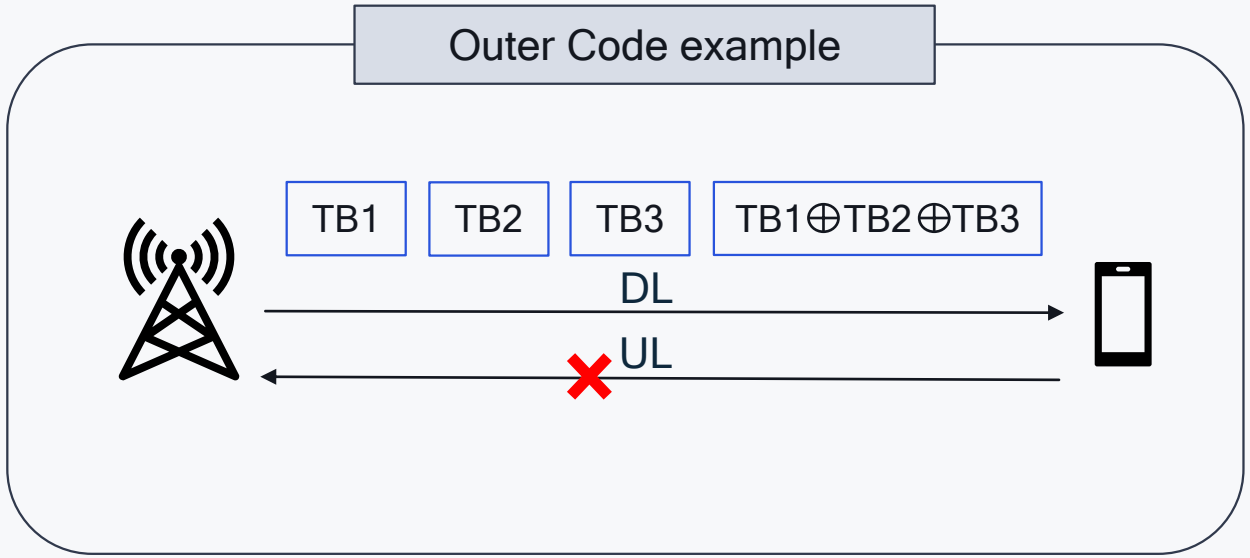

Challenge: example only works if DL and UL traffic is symmetric and simultaneous

Summary of proposals

Proposal	Corresponding deployment	What are the benefits?
Network coding for PDCP duplication replacement	CA, DC, IAB, mTRP, etc.	Better efficiency and delays as compared to PDCP duplication for the same reliability Flexible redundancy ratio for different reliability requirements Flexible split for different paths
Network coding in MBS	MBS	Optimization of the procedure to improve link efficiency and reduce latency Improved reliability
Network coding in V2X	RSU, V2X	High reliability with much less radio resources Mitigate half-duplex limitation
Outer code in MAC/RLC layer	eMBB	Reduce buffering requirement in receiver Reduce buffering requirement in transmitter Reduced latency

Network Coding (NC) as a replacement of PDCP duplication – Motivation, benefits

- **Link diversity** is beneficial for increased efficiency/reliability, and reduced latency
  - Especially higher frequency band operation where communication link may be easily impaired/blocked
- **Network coding** as a solution to exploit link diversity - **An alternative to PDCP duplication**
  - Better efficiency and delays as compared to PDCP duplication for the same reliability
  - Flexible redundancy ratio for different reliability requirements
- **Applications:** System with multiple communication paths e.g. multi-TRP, IAB, DC
- **Study/Consideration Proposals:**
  - Study the benefits of Network coding and consider at which protocol layer it should be applied
  - Consider the design that may include the application of Network Coding with feedback
  - Consider the design in the context of Sidelink and joint Sidelink and Uu operation

Network Coding (NC) as a replacement of PDCP duplication – Example

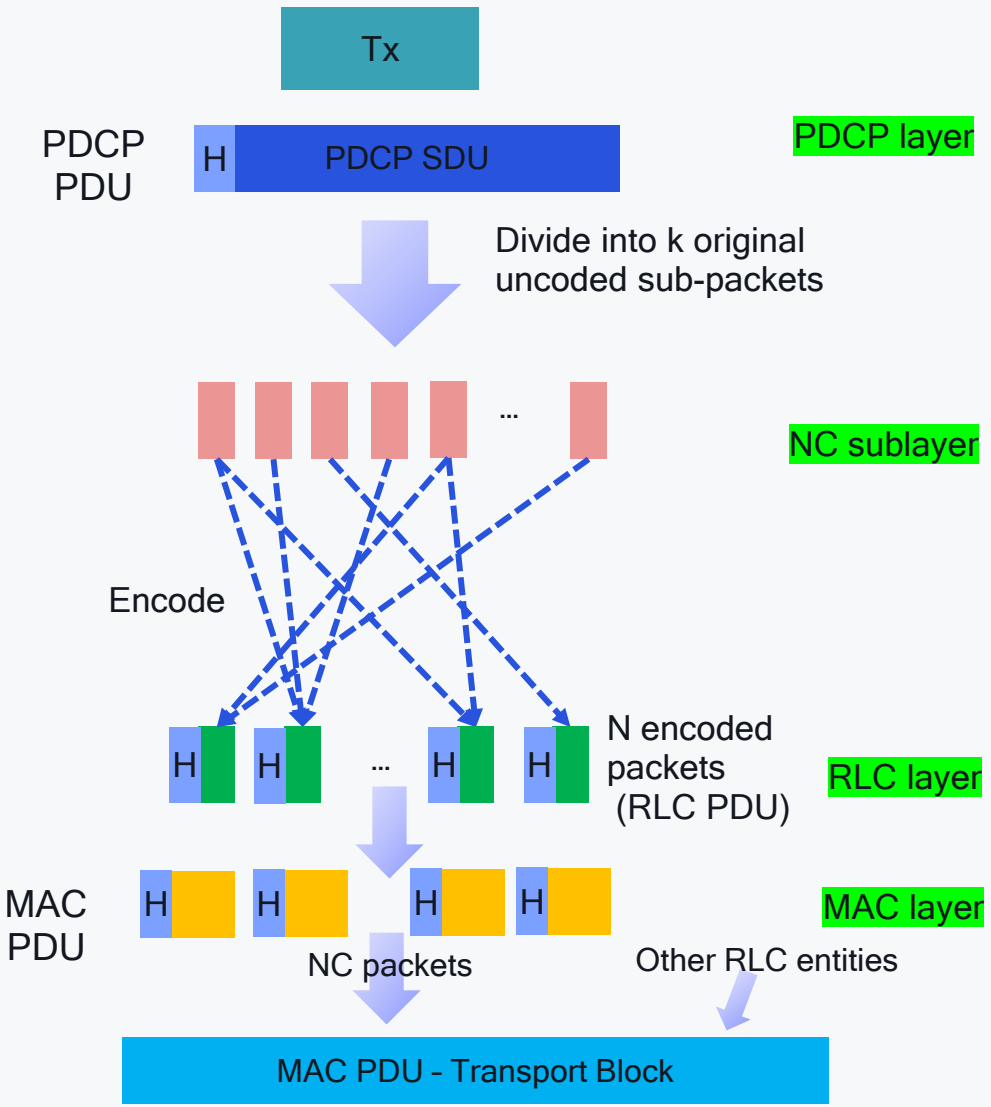

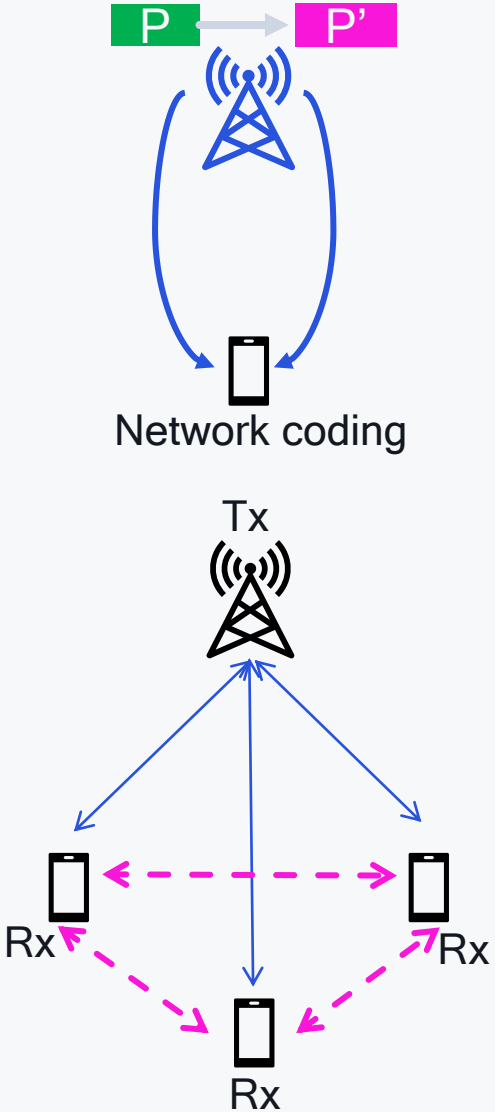

- **Network coding:**
  - Flexible redundancy ratio for different reliability requirements
  - Potentially better efficiency compared to PDCP duplication for the same reliability
- **Application scenarios:**
  - System with multiple paths: mTRP, IAB, DC
  - Direct link, Direct link+Sidelink
- **NC sublayer:**
  - Potentially placed between PDCP and RLC

Outer code enhancement for NR MBS – Motivation, benefits

- **Motivation**
  - After a sequence of intial multicast transmissions, the different receivers have different sets of missed packets
    - The transmitter is either aware (MBS with feedback) or unaware (MBS without feedback)
  - In both cases, the transmitter needs to minimize the resources needed for retransmission, while ensuring successful reception by all receivers

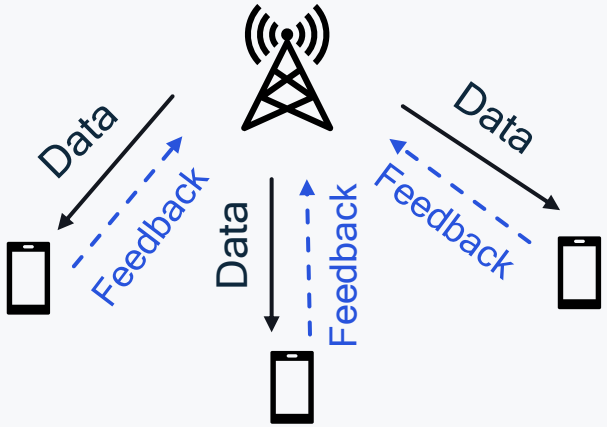

- **Benefits**
  - Overall improved spectral efficiency
  - Improved reliability

- **Without feedback: optimization of outer code**
  - Possible further optimization by moving the outer code into RAN
    - Optimization of the procedure to improve link efficiency and reduce latency
    - Optimization of the generator matrix, symbol size for better performance
    - Optimization of the PDU size, header for overhead reduction

- **With feedback: optimization for ReTX**
  - Feedback type
    - PHY: NAK for PHY PDU
    - RLC/PDCP: Number of NAKs for RLC/PDCP PDUs
  - Outer code scheme
    - Option 1: XOR in PHY
    - Reduce number of reTx packets
      - Group the UEs for reTx
    - Option 2: Rateless codes for RLC/PDCP
      - The ReTx packets can be used for all UEs
      - Reduce feedback payload size

Outer code enhancement for NR MBS – Example

- RLC/PDCP
  - Raptor codes

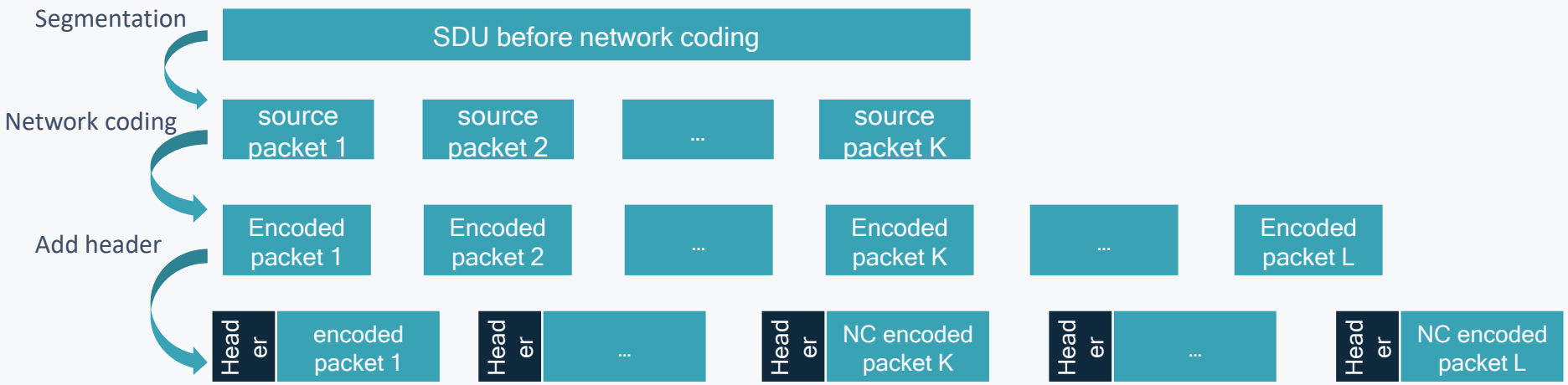

- PHY: reduce the number of retransmission packets from 5 to 2

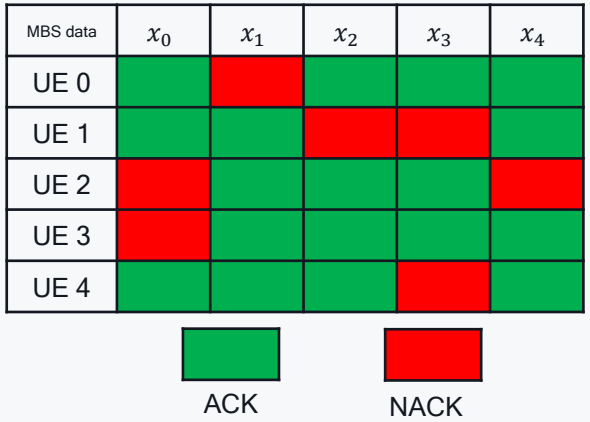

Rank 5

$$\mathbf{A} = \begin{array}{c} \begin{array}{ccccc} x_0 & x_1 & x_2 & x_3 & x_4 \end{array} \\ \begin{bmatrix} 1 & \mathbf{1} & 1 & 1 & 1 \\ 1 & 1 & \mathbf{1} & 0 & 1 \\ 1 & 1 & 0 & \mathbf{1} & 1 \\ \mathbf{1} & 1 & 1 & 1 & 0 \\ 0 & 1 & 1 & 1 & \mathbf{1} \\ \mathbf{1} & 1 & 1 & 1 & 1 \\ 1 & 1 & 1 & \mathbf{1} & 1 \end{bmatrix} \end{array} \begin{array}{l} \text{UE 0} \\ \text{UE 1} \\ \\ \text{UE 2} \\ \\ \text{UE 3} \\ \text{UE 4} \end{array}$$

Create matrix A

Rank 2

$$\mathbf{B} = \begin{bmatrix} 1 & \mathbf{1} & 0 & 1 & 0 \\ 0 & 0 & \mathbf{1} & 0 & 1 \\ 1 & 1 & 0 & \mathbf{1} & 0 \\ \mathbf{1} & 1 & 0 & 1 & 0 \\ 0 & 0 & 1 & 0 & \mathbf{1} \\ \mathbf{1} & 1 & 0 & 1 & 0 \\ 1 & 1 & 0 & \mathbf{1} & 0 \end{bmatrix}$$

Replace certain ‘1s’ to ‘0’ to reduce rank

Rank 2

$$\mathbf{C} = \begin{bmatrix} 1 & 1 & 0 & 1 & 0 \\ 0 & 0 & 1 & 0 & 1 \end{bmatrix}$$

Find row basis

$x_0 \oplus x_1 \oplus x_3$

$x_2 \oplus x_4$

Network coding (NC) for V2X – Motivation, benefits

- **Motivation:** Use NC to achieve high reliability with limited radio resources
  - Advanced V2X scenarios requires high reliability, and may require more retransmission
    - 90% to 99.999% for extended sensor sharing and cooperative driving with min comm. Range between 50-1000m (TS 22.186)
  - Re-Tx by all Tx UE individually to achieve such high reliability requires too many radio resources

- **Use cases:**
  - NC with unmanaged traffic (broadcast/conn-less groupcast)
    - RSU placed at a location that is LOS with most vehicles, and can perform NC on the received broadcast/groupcast data
    - RSU Re-Tx NC packets to other UEs NLOS of original transmitters
  - NC with managed traffic (managed groupcast)
    - NC UE in a coordinated driving group performs NC Re-Tx to enhance reliability for cars
    - NC UE performs NC on traffic from different source UEs and apply Re-TX on behalf of the original UE to save on resources (and save power of other UEs)

Use case 1: NC for unmanaged traffic

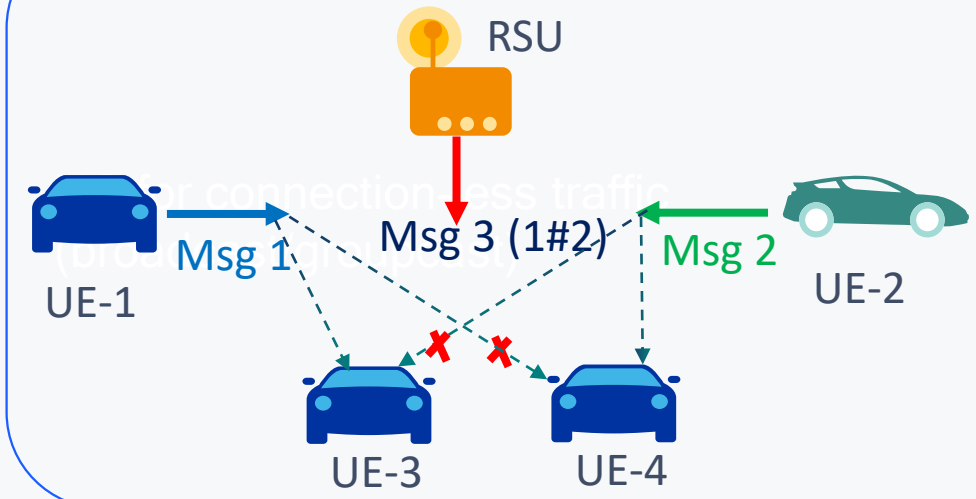

Use case 2: NC for managed traffic

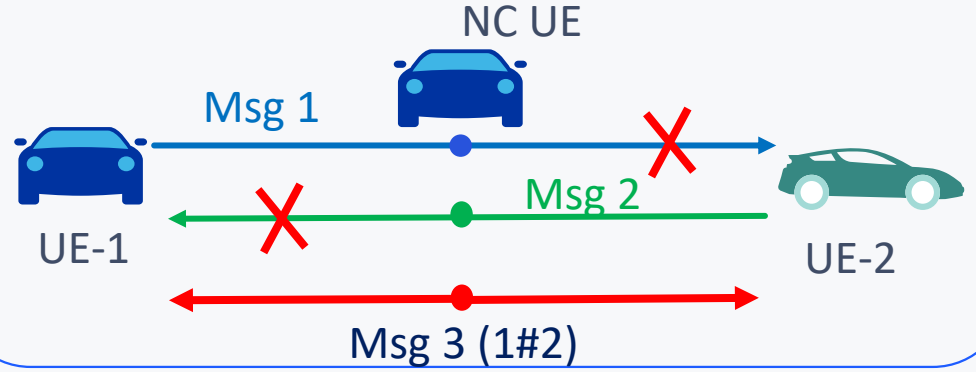

Network coding (NC) for V2X – Example

Scope:

- Study the performance benefits of NC support for SL broadcast/groupcast
- Study the system design to support NC for SL data traffic, considering
  - NC for broadcast/groupcast traffic
  - PC5 enhancements to support NC at PDCP layer or MAC layer
  - Coding algorithms and NC selective combining techniques (considering HARQ feedback information for source or common destination, direction, location, etc.)
  - NC capability indication and NC UEs discovery
  - NC configuration (LCHs to enable with NC, allowed NC algorithms, etc) to UEs
  - Per packet/per flow activation/deactivation of NC

Example: NC for user data at MAC layer

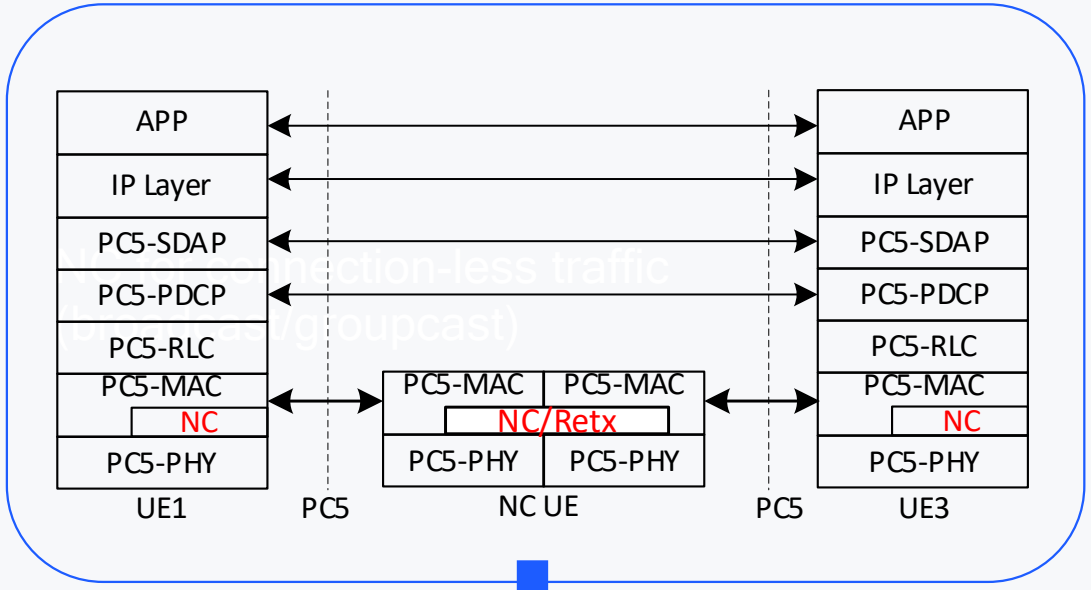

NC at MAC layer is efficient
- ReTx at lower layers of the protocol stack is efficient
- ReTx on combined MAC PDUs can help meet tighter delay constraints
- HARQ feedback can be leveraged to improve NC ReTx efficiency

MAC/RLC layer outer code for buffer reduction – Motivation

- Problem: Ultra high throughput in NR eMBB incurs large buffer (HARQ buffer + L2 buffer) cost on both UE and gNB

- On the UE side (DL)
  - HARQ buffer stores LLRs of failed TBs
  - L2 buffer stores all out-of-order passing TBs after one TB failure

Observation: All TBs after TB2 need to be buffered in L2 buffer due to out-of-order before TB2 is correctly received (through RLC retransmission)

- On the network side (DL)
  - Transmitter need to store all transmitted TBs in the RLC retransmission buffer prior to the reception of RLC ACK

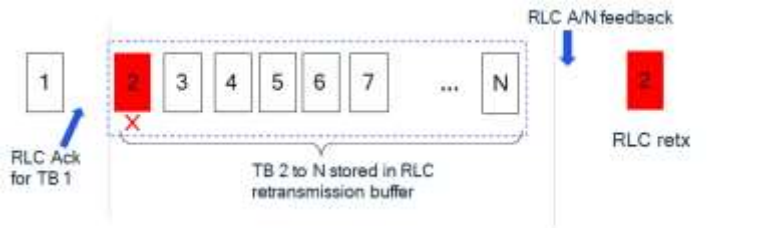

- Proposal: use MAC/RLC outer code to ensure in-order packet delivery and reduce buffer requirement

- On the UE side (DL)

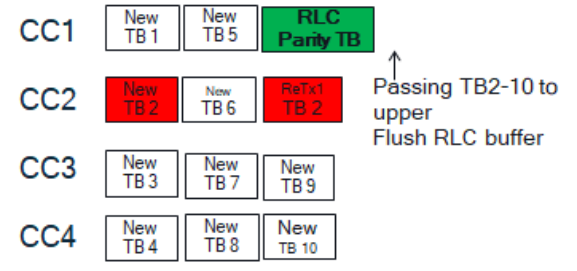

Observation: TBs are flushed quickly from the RLC Rx buffer with the help of MAC/RLC outer code (w/o RLC retransmission)

- On the network side (DL)
  - Transmitter only need to store parity TBs

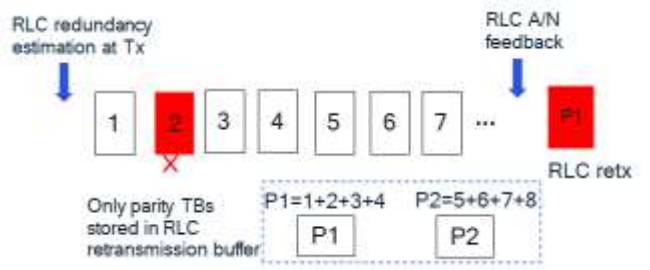

Qualcomm

Thank you

Follow us on:

For more information, visit us at:

www.qualcomm.com & www.qualcomm.com/blog

All data and information contained in or disclosed by this document is confidential and proprietary information of Qualcomm Technologies, Inc. and/or its affiliated companies and all rights therein are expressly reserved. By accepting this material the recipient agrees that this material and the information contained therein will not be used, copied, reproduced in whole or in part, nor its contents revealed in any manner to others without the express written permission of Qualcomm Technologies, Inc. Nothing in these materials is an offer to sell any of the components or devices referenced herein.

©2018-2020 Qualcomm Technologies, Inc. and/or its affiliated companies. All Rights Reserved.

Qualcomm is a trademark of Qualcomm Incorporated, registered in the United States and other countries. Other products and brand names may be trademarks or registered trademarks of their respective owners.

References in this presentation to “Qualcomm” may mean Qualcomm Incorporated, Qualcomm Technologies, Inc., and/or other subsidiaries or business units within the Qualcomm corporate structure, as applicable. Qualcomm Incorporated includes Qualcomm’s licensing business, QTL, and the vast majority of its patent portfolio. Qualcomm Technologies, Inc., a wholly-owned subsidiary of Qualcomm Incorporated, operates, along with its subsidiaries, substantially all of Qualcomm’s engineering, research and development functions, and substantially all of its product and services businesses, including its semiconductor business, QCT.