Qualcomm

RP-213451

3GPP TSG RAN#94e
Electronic Meeting, Dec. 06-17, 2021
Agenda Item: 8A.2

Views on NR NTN project

5G

Background

- In this contribution, we present our views on the following areas in RP-212713:

- Coverage enhancement:
  - Study, and if justified, specify NTN-specific techniques for improved diversity and/or reduced polarization loss [RAN1]
  - Study, and if justified, improve the performance of low-rate codecs in link budget limited situation including reducing RAN protocol overhead for VoNR [RAN1,RAN2] [Liaise with SA2/SA4 as necessary]
    - NOTE: Intent is to optimize the RAN to work with the lowest rate codec currently available and will not introduce a new codec.

- Network verified and Network based UE location

- NR-NTN deployment in above 10 GHz bands

Coverage enhancements

- Objective is to ensure basic services for smart phone devices
  - Voice
  - Low-rate data (e.g. SMS)

- Smart Phone Characteristics
  - Typically have multiple PAs and transmit antennas
    - Linear polarized
    - May be capable of coherent MIMO
  - UL transmission will typically be narrowband due to link budget

Coverage enhancement (RAN2) - Headers for voice

- For each packet generated by voice codec (e.g., per 20ms), protocol headers incur signification overhead.
- At initial state of ROHC, one packet includes
  - RTP header = 12 bytes
  - UDP header = 8 bytes
  - IP header = 20 bytes
  - SDAP header = 1 byte
  - PDCP header (12 bit SN, 4 byte UP IP) = 6 bytes
  - RLC header (6 bit SN, segmented SDU) = 3 bytes
  - MAC header (8 bit L field) >= 2 byte
  - Total overheads > 51 bytes
- According to current specifications, the 3GPP protocol overhead for 5.6 kbps (1 frame/20ms) codec is 36%, even with usage of ROHC:
  - 1-byte SDAP header and 4-byte UP IP overhead are not considered in the calculation.
- **For voice service using NTN, these overheads can be reduced.**

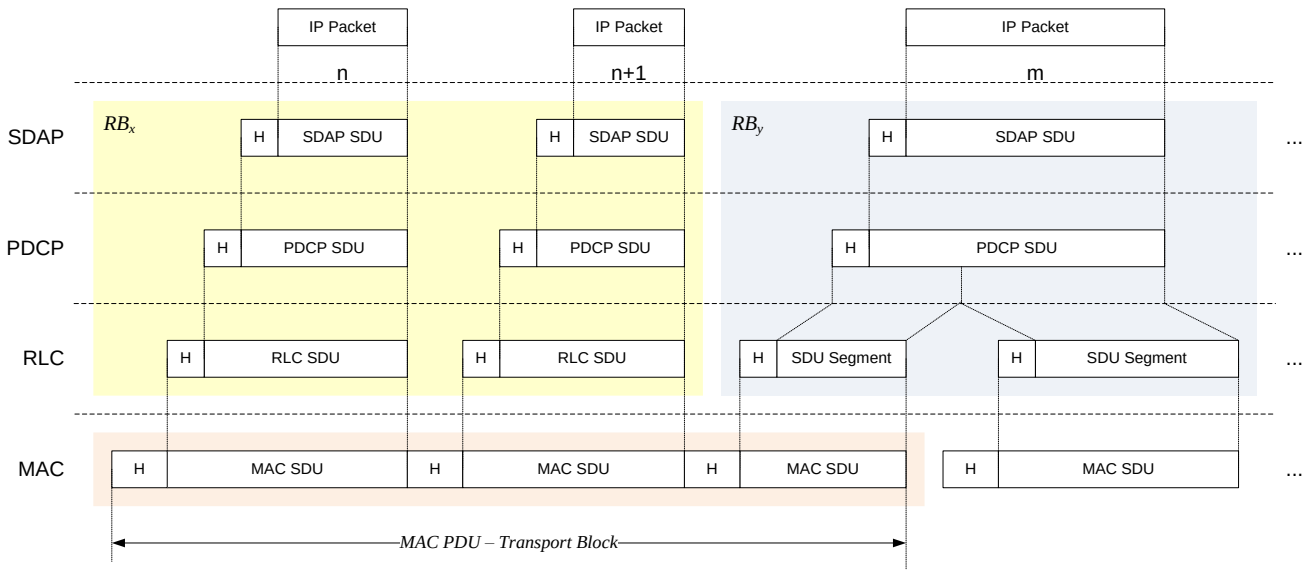

TS 38.300 Figure 6.6-1: Data Flow Example

Coverage enhancement (RAN2) - Headers for voice

- Examples of (small) enhancements (mostly RAN2) which can reduce the protocol overhead significantly
  - PDCP header
    - Integrity protection for voice DRB can be disabled (but ciphering is still used). This saves 4 bytes overhead.
    - SDAP header can be removed for voice bearer. This reduces 1 byte overhead.
  - RLC header
    - Limit number of segments, consider RLC TM mode for voice bearer without RLC segmentation
  - MAC header
    - Configure TBS/configured grant periodicity to fit the codec rate and avoid unnecessary MAC sub-headers.
  - For the AMR 4.75kbps (codec rate of 5.6kbps after adding RTP protocol header), the baseline overhead is as follows:
    - The overhead % will be even larger for lower rates (showing example for 4.8kbps as well, although it doesn't correspond to any 3GPP codec)
  - The potential gains by removing overhead are up to ~2dB in this setting.

Codec (kbps)	Inter tx time (ms)	voice Payload (byte)	ROHC header	PDCP (SN 12 bit)	RLC	MAC	TBS (bits)	% overhead	Approx dB gain if % overhead was zero
5.6 (AMR 4.75)	20	14	3	2	1	2	176	36%	1.93dB
4.8	20	12	3	2	1	2	160	40%	2.21dB

Coverage enhancement - RAN1

- Repetition and diversity for bottle neck channels (starting from Rel-17 covEnh)
- Techniques to enable *full-power* UL transmission for smart phones: increased transmit power, diversity, and reduced (circular-)polarization loss.
  - Enhancements to take full advantages of existing techniques
- For evaluation results regarding polarization loss, please refer to the appendix.

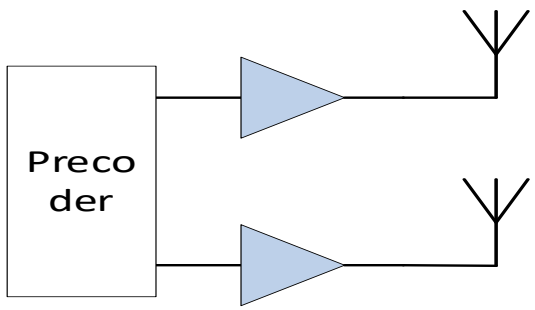

Precoder cycling: Full power and spatial diversity
Network controlled precoder (via SRS codebook): Full power and matched tx/rx polarization (requiring cross-polarized tx antennas)

Network verified and Network based UE location

- In the previous rounds of discussion, it was unclear what the requirements are for position location and location verification.

- We propose to have a **short RAN-level study** to clarify the requirements, and then task the RAN WGs to implement solutions in line with the conclusions of the study.
  - If necessary, liaise with SA WGs to assess e.g. threat model for location verification.

- As described in the current WID draft, the solutions should focus on the case of **limited number of satellites in view (including single satellite positioning).**

Scope of >10GHz

- The scope of the work in bands above 10GHz should follow the agreed principles in RAN#92e (RP-211596):
  - Focus on Ka band as a candidate example band.
  - Do not define a new FR. Instead, take properties / parameters from one of the existing FR.
  - The decisions taken on this work shall not impact terrestrial bands.
  - Coexistence studies and regulatory issues to be taken into account.

Summary of proposals

- On coverage enhancement:
  - Study methods to reduce RAN protocol overhead [RAN2]
  - Study methods to reduce polarization loss [RAN1]
- On Network verified and Network based UE location:
  - Start the work with a RAN-level study to clarify requirements / use cases.
  - Focus on single satellite / small number of satellites.
- On >10GHz
  - Focus on Ka band as example band.
  - Follow the principles agreed in RP-211596.

Appendix:
Full-Power UL Transmission & polarization loss

Performance Comparison

Balanced power and uncorrelated channel

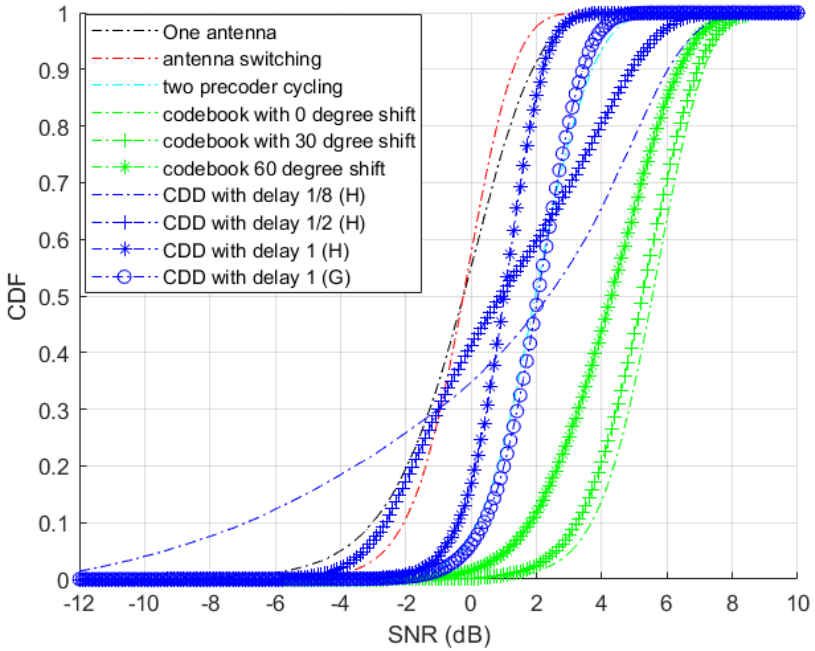

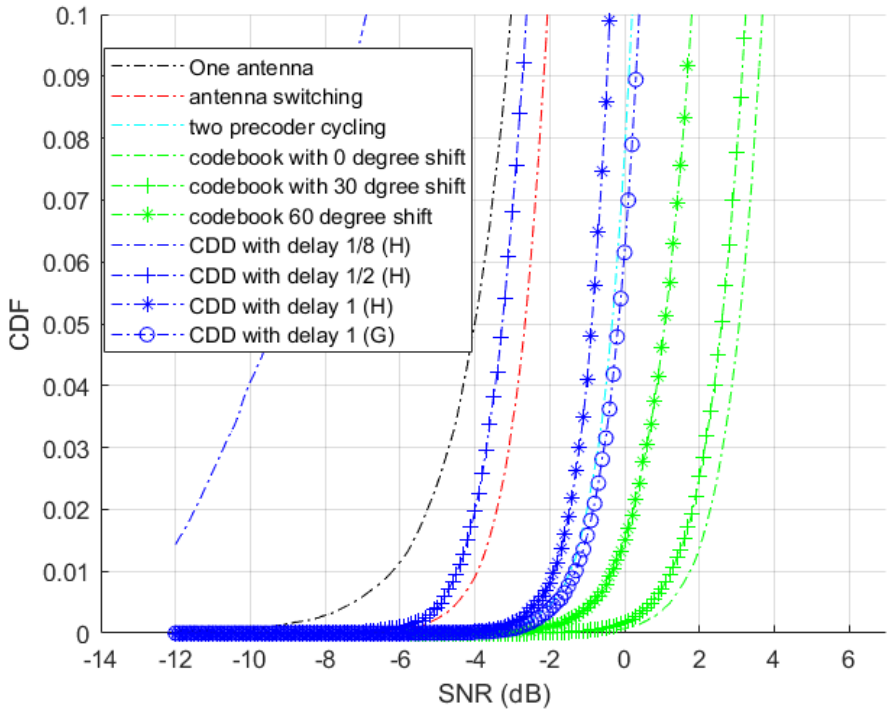

Schemes	One antenna	Antenna switching	Two precoder switching	Codebook with 0^0 - phase shift	Codebook with 30^0 - phase shift	Codebook with 60^0- phase shift	CDD with 1/8 Nyquist sample delay (harmonic)	CDD with ½ Nyquist sample delay (harmonic)	CDD with 1 Nyquist sample delay (harmonic/geometric)
10-percentile SNR (dB)	-3.1	-2.1	0.2	3.6	3.2	1.8	-6.8	-2.6	-0.4/0.4
1-percentile SNR (dB)	-6.3	-3.9	-1.4	1.7	1.3	-0.3	<-12	-4.6	-1.9/-1.4

Discussions

Balanced power and uncorrelated channel

- Precoder cycling
  - About 2.3 dB gain over antenna switching
  - Similar performance as CDD with delay of Nyquist sample duration (evaluated with geometric mean) or 0.5 to 0.6 dB gain over CDD (evaluated with harmonic mean)
  - polarization directions of the two antennas don't matter
- Precoder with SRS
  - About 5.8 dB over antenna switching or 7 dB to 8 dB gain over one antenna.
  - About 0.4 dB loss and 2 dB loss with 30-degree and 60-degree phase shifts w.r.t SRS transmission, respectively.
  - Coherent time requirement needs to be extended to at least 40ms due to RTD.
  - Requires cross polarization (if two have the same polarization direction, performance is comparable to CDD assuming that polarization direction is random due to UE rotation)
- CDD
  - A delay of nearly Nyquist sample duration is needed to have comparable performance as precoder cycling
  - Channel is highly non-flat even with LOS and additional performance (0.5 dB or more) loss due to channel estimation is expected.

Performance

Balanced power and fully correlated channel

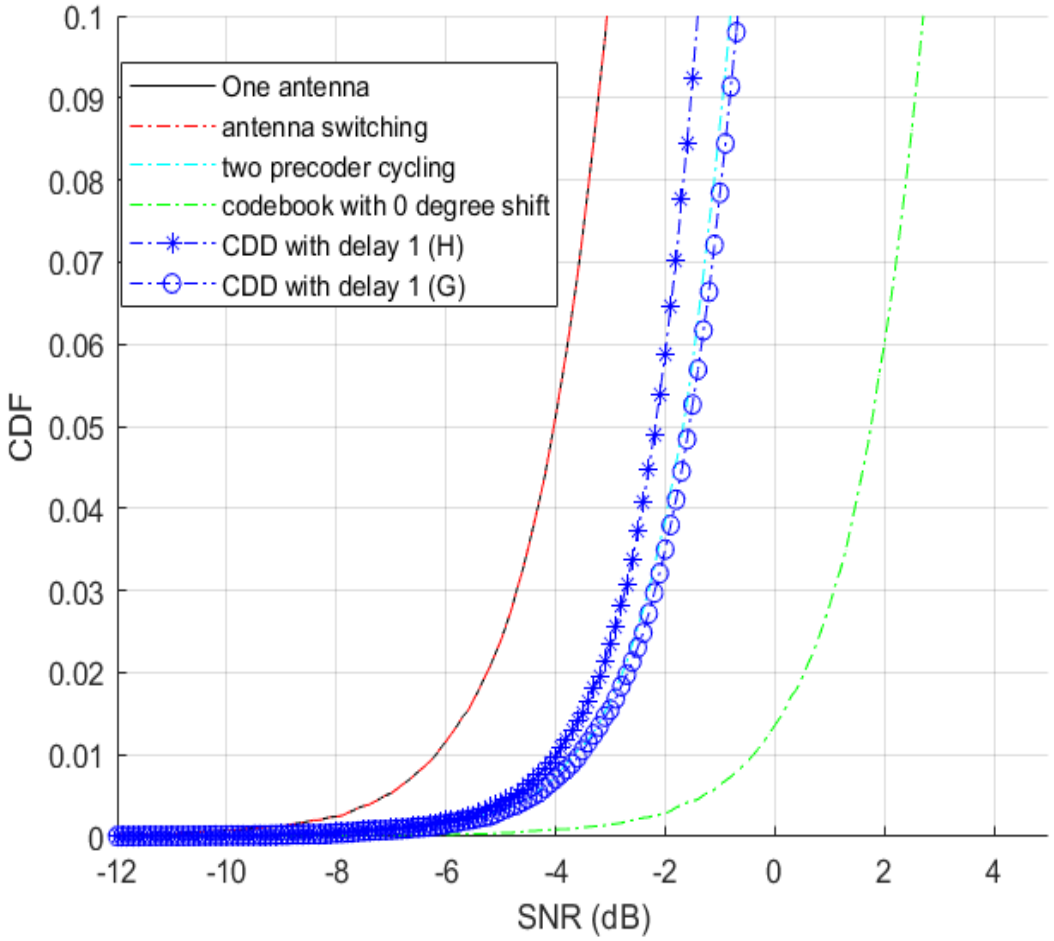

Schemes	10-percentile SNR (dB)	1-percentile SNR (dB)
One antenna	-3.1	-6.3
Antenna switching	-3.1 (-2.1)	-6.3 (-3.9)
Two precoder cycling	-0.7(0.2)	-3.7 (-1.4)
Codebook	2.7 (3.6)	-0.4 (1.7)
CDD with delay 1 (H)	-1.4 (-0.4)	-4 (-1.9)
CDD with delay 1 (G)	-0.7 (0.4)	-3.7(-1.4)

Note: Values in the bracket are for uncorrelated channel.

Discussions

Balanced power and fully correlated channel

- For the flat Rician channel under consideration
  - Channel (transmit) diversity gain is about 1 dB at 10 percentile SNR and > 2dB at 1 percentile SNR
- Power gain due to the use of two antennas can be maintained
  - 2.4 dB for precoder cycling and 3 dB for codebook transmission

Performance

Imbalanced power and uncorrelated channel

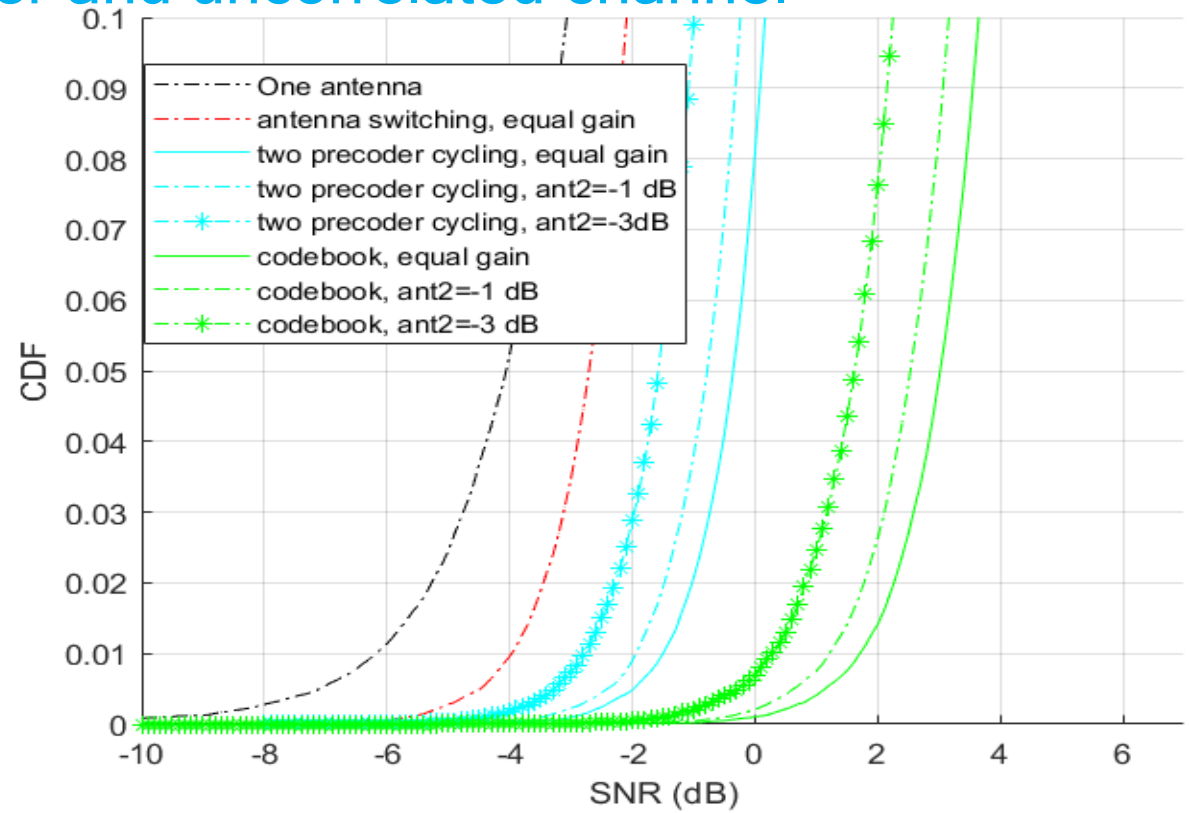

Schemes	One antenna	Antenna switching equal gain	Two-precoder cycling, equal gain	Two precoder cycling, ant2=-1 dB	Two precoder cycling, ant2=-3 dB	Codebook,equal gain	Codebook, ant2=-1 dB	Codebook ant2=-3 dB
10-percentile SNR (dB)	-3.1	-2.1	0.2	-0.3	-1	3.6	3.1	2.3
1-percentile SNR (dB)	-6.3	-3.9	-1.4	-1.9	-2.8	1.7	1.2	0.3

Discussions

Imbalanced power and uncorrelated channel

- Diversity gain and polarization gain is kept with imbalanced power
- Performance difference is about the same as or less than the loss in transmit power
  - 0.5 dB performance loss if the power of the second antenna is -1 dB vs 0.5 dB transmit power loss
  - 0.9 dB performance loss if the power of the second antenna is -3 dB vs 1.24 dB transmit power loss

Conclusions

- If cross-polarization and antenna coherence (>40ms) are feasible, use precoder based UL transmission; otherwise, precoder cycling or large-delay CDD is preferred.
- For CDD, delay comparable or larger than the Nyquist sample is needed and its performance is expected to be 0.5 dB worse than two-precoder cycling.
- 8 dB performance gain can be achieved with two cross-polarized antennas @ 1-percentile SNR
  - 3dB gain due transmit power
  - <3 dB gain due to polarization matching
  - >2dB gain due to channel(transmit) diversity
- Limited power imbalance among antennas does not affect diversity and polarization gain.
  - 6.6 dB performance gain (@1-percentile) can be achieved with an additional antenna @-3 dB power and codebook transmission

Qualcomm

Thank you

Follow us on:

For more information, visit us at:

www.qualcomm.com & www.qualcomm.com/blog

All data and information contained in or disclosed by this document is confidential and proprietary information of Qualcomm Technologies, Inc. and/or its affiliated companies and all rights therein are expressly reserved. By accepting this material the recipient agrees that this material and the information contained therein will not be used, copied, reproduced in whole or in part, nor its contents revealed in any manner to others without the express written permission of Qualcomm Technologies, Inc. Nothing in these materials is an offer to sell any of the components or devices referenced herein.

©2018-2021 Qualcomm Technologies, Inc. and/or its affiliated companies. All Rights Reserved.

Qualcomm is a trademark of Qualcomm Incorporated, registered in the United States and other countries. Other products and brand names may be trademarks or registered trademarks of their respective owners.

References in this presentation to “Qualcomm” may mean Qualcomm Incorporated, Qualcomm Technologies, Inc., and/or other subsidiaries or business units within the Qualcomm corporate structure, as applicable. Qualcomm Incorporated includes our licensing business, QTL, and the vast majority of our patent portfolio. Qualcomm Technologies, Inc., a subsidiary of Qualcomm Incorporated, operates, along with its subsidiaries, substantially all of our engineering, research and development functions, and substantially all of our products and services businesses, including our QCT semiconductor business.