Smarter technology for all

3GPP TSG RAN#93-e
Electronic Meeting, September 13 – September 17, 2021

RP-212461

Agenda Item: 9.0.2
Source: Lenovo, Motorola Mobility
Document for: Discussion

Discussion on IIoT/URLLC functionalities for Rel18

Lenovo

Motivation for studying URLLC/IIoT profile definition

- Process automation
  - Technical requirements
    - KPI: 40-50 bytes of information
    - Reliability & Latency: 99.9999% & ~100ms
    - Deterministic, TSN
  - Market requirements:
    - It's essential to make wireless connectivity very inexpensive for a S/A by e.g., reducing its complexity to minimum
    - Therefore, we can consider reduction of form factor (size), power consumption, bandwidth, number of RF chain/antennas etc.,
- Proposal 1: Specify URLLC profile definition in 3GPP to identify essential features of a reduced complexity URLLC device for IIoT application

Motivation for FR2 improvement for URLLC/IIoT deployments

- Larger bandwidth in FR2 helps in transmission of larger packet sizes and in offloading traffic from FR1
  - Gateway type UE connecting multiple Sensor / Actuators using aggregated TSN stream
  - AR/VR use case

- FR2 deployment inside factory suffers from frequent beam blockage due to presence of clutter and movement of robots/AGVs thereby affecting both reliability and availability

- Proposal 2: Study enhancing FR1 and FR2 CA operation including both PLMN and NPN. Beam management framework requires enhancement to enable reliable communication link

Motivation for using sidelink in industrial communications

- To date – focus on study and definition of sidelink/D2D communication(QoS) for V2X (3ms latency and 99.99% Reliability)
- No work to date on use of sidelink and additional QoS requirements and how to meet them for deterministic communication beyond V2X
- Industry 4.0 deployment mainly focuses on using licensed spectrum using FR1
  - Limited spectrum availability in FR1 to serve multiple use case underscores importance of spectral efficiency
- Sidelink is complementary to the NR-Uu deployment in the factory
  - For in-coverage case, sidelink offers a resource efficient deployment and latency reduction within a smaller service area and for limited number of UEs
  - For out-of-coverage case, sidelink as a relay offers coverage enhancement

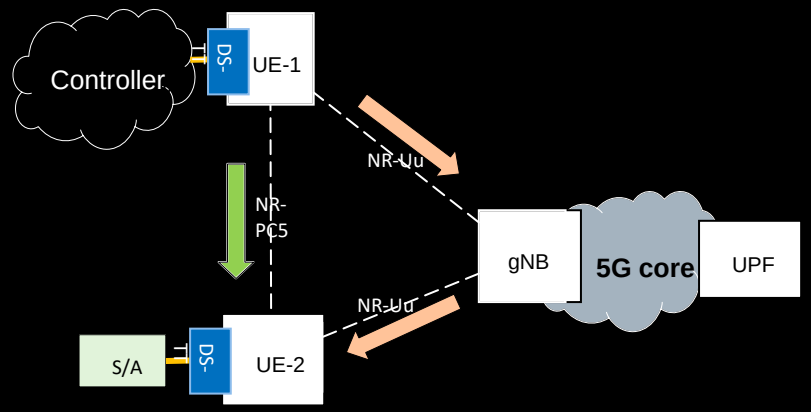

Figure: Showing the extra hop via gNB compared to Sidelink

Motivation for using sidelink in industrial communications

- Utilizing gNB based communication implies potential extra hops in various scenarios
  - For example, PLC connected to UE controlling various Sensors/Actuators (S/As)
  - Using sidelink can eliminate this extra hop and resulting spectral inefficiency
- Cooperative carrying robots/AGVs exchanging control commands and control feedback using direct sidelink communication
- Using Sidelink rotating part of the robot can be connected to controller as shown in the right figure
- Inter-S/A data transfer could be sidelink-based for latency reduction

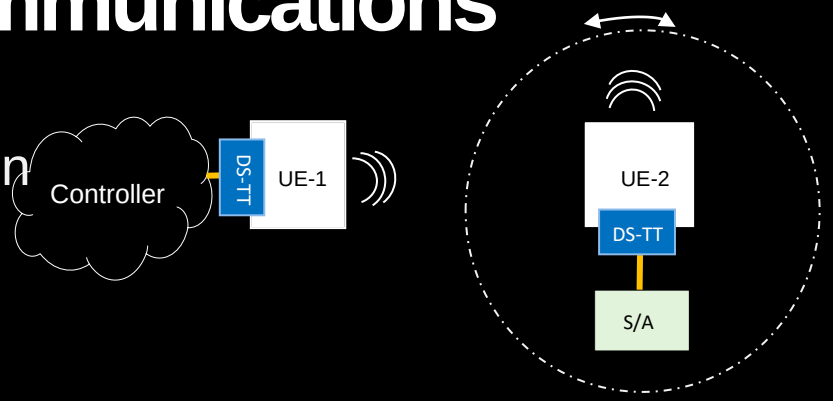

Figure: wired replacement in a rotating part of the robot

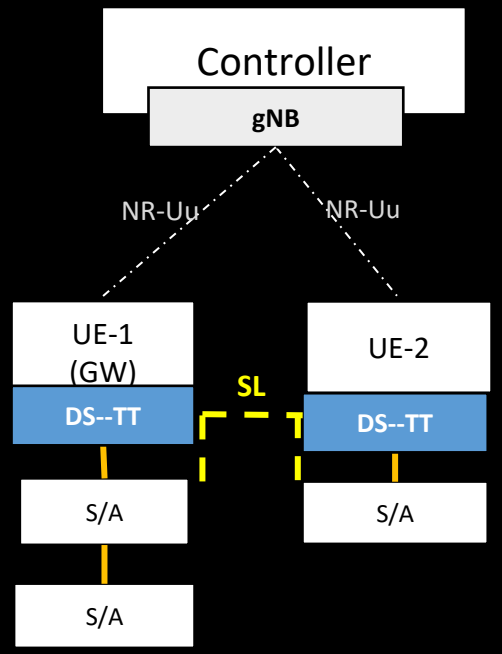

Figure: Showing field devices exchanging data directly without routing via controller

Proposed Areas of Study for Sidelink Enhancements

Proposal 3: Feasibility study for supporting direct sidelink communication for various IIoT use cases *[RAN1]* targeting:

- Improvements to physical layer reliability and latency of sidelink control/data channel communications

Proposal 4: Study on the need and implementation of sidelink based time sensitive communication [RAN1/RAN2]

- Potential impact on 3GPP architecture in collaboration with SA WG2

Conclusion

Proposal 1: Specify URLLC profile definition in 3GPP to identify essential features of a reduced complexity URLLC device for IIoT application

Proposal 2: Study enhancing FR1 and FR2 CA operation including both PLMN and NPN. Beam management framework requires enhancement to enable reliable communication link

Proposal 3: Feasibility study for supporting direct sidelink communication for various IIoT use cases *[RAN1]* targeting:

- Improvements to physical layer reliability and latency of sidelink control/data channel communications

Proposal 4: Study on the need and implementation of sidelink based time sensitive communication [RAN1/RAN2]

- Potential impact on 3GPP architecture in collaboration with SA WG2

thanks.

Smarter technology for all

Lenovo