3GPP TSG RAN Meeting #93-e
Electronic Meeting, September 13 - 17, 2021

RP-212393

ZTE
Tomorrow never waits

Source: ZTE, Sanechips
Agenda: 9.0.3

# Consideration on Rel-18 SL Relay and Mesh

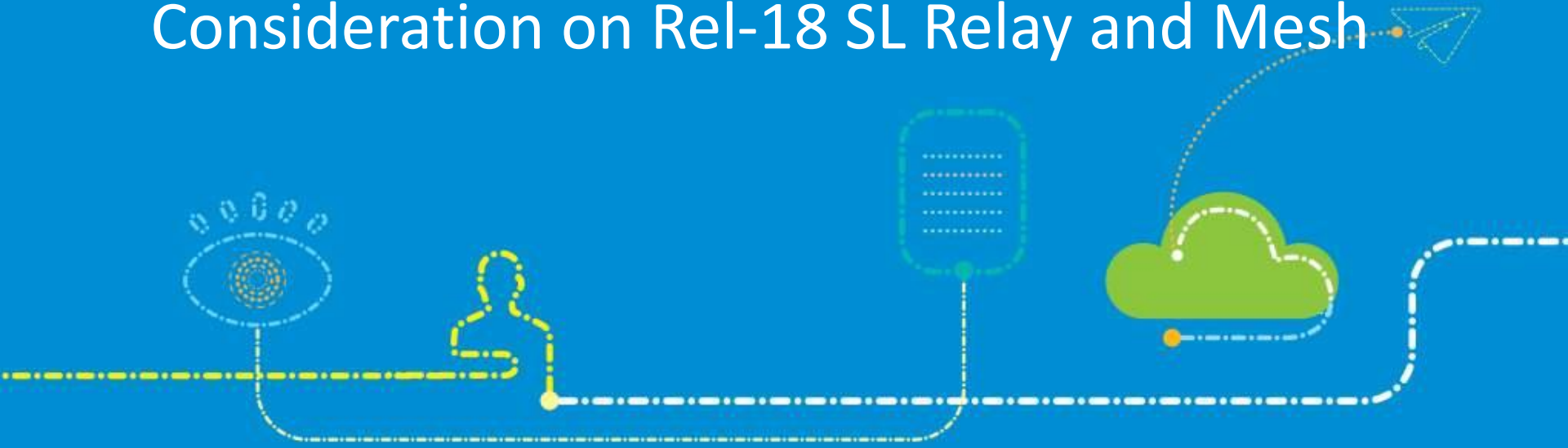

# Motivations

- In Rel-17, the service continuity mechanism for UE-to-Network relay is limited to intra-gNB cases. and the mobility scenario of “between indirect and indirect” is not supported due to time limitation. In order to enable flexible UE-to-Network relay mobility, it is suggested to specify the inter-gNB service continuity and indirect-to-indirect path switch.

- During the Rel-18 workshop, UE-to-UE relay support is frequently mentioned by many companies for both public safety and commercial scenarios. It is time to consider the UE-to-UE relay in Rel-17.

- In order to fully exploit the benefits of both SL and Uu communication, the multi-path support for UE-to-Network relay may be considered if time allows.


© ZTE Corporation. All rights reserved

# New use case for R18 SL UE-to-UE relay

- Industrial automation can use tight closed-loop control in applications such as manufacturing, machine control, packaging, and printing. In these use cases, controllers, sensors and actuators located within a local area may interact with each other.

- These use cases require low latency, high reliability, and deterministic delivery of messages.

- The communication traffic between these devices is confined within the local area of industrial park or factory to ensure privacy and security.

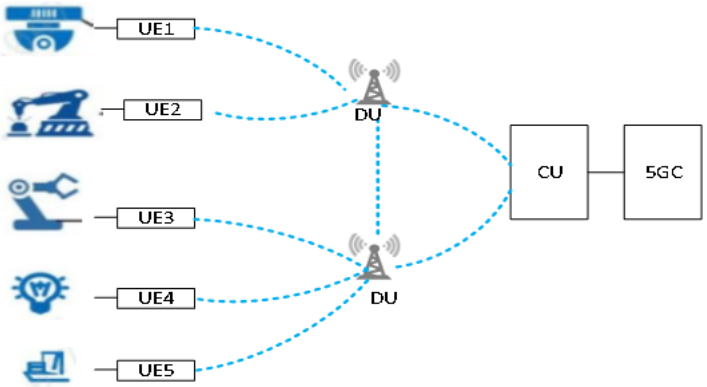


Illustration of industrial network


© ZTE Corporation. All rights reserved

# UE-to-UE relay

- The sidelink be used to support the local communication within industrial park. However, the transmission range of SL is limited.
- To increase coverage, the following UE-to-UE relay may be considered:
  - UE type SL relay
    - UE act as relay which forward the SL traffic from one UE to another
  - gNB type SL relay
    - The SL traffic between UEs is forwarded via one or multiple gNB/DU/CU(s) within the mesh based NR LAN.
    - The UEs, DUs, CUs, gNBs and IAB nodes jointly form a mesh network.

UE type SL relay

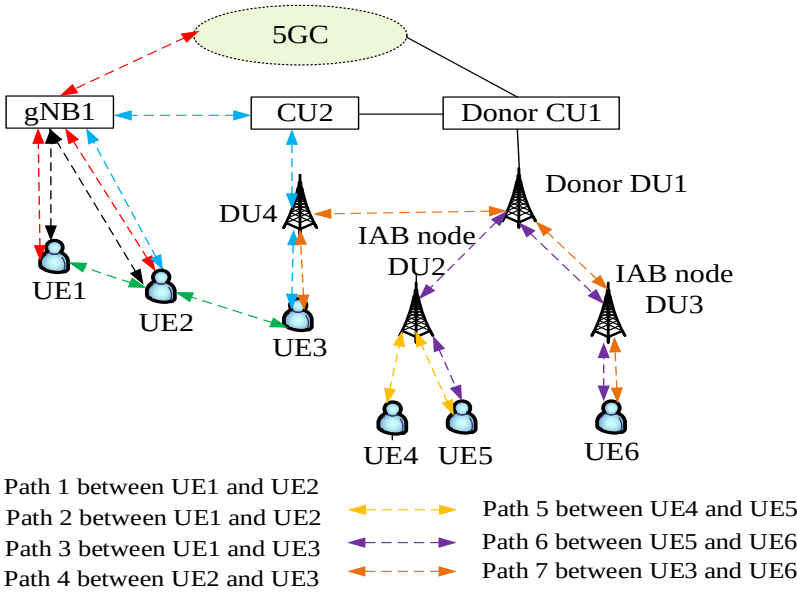


gNB/DU type SL relay


© ZTE Corporation. All rights reserved

# Advantages of gNB/DU type SL relay

- Compared with traditional PDU session based network transmission, gNB/DU type SL relay has following advantages:
  - Latency reduction
    - data traffic not traverse 5GC and even CU
  - Enhanced security
    - the SL PDCP traffic is transparent to gNB/DU/CU/IAB node and local forwarding is restricted to a set of UEs within the private group
- Compared with UE type SL relay, gNB/DU type SL relay has following advantages:
  - Extended transmission range
    - network based on the multi-hop Uu forwarding of gNB/DU/CU/IAB node
  - Reliable network topology
    - network node based relay is stationary and more reliable
  - High throughput
    - eMBB techniques in Uu, such as MIMO, DC/CA, NR-U, wide and high spectrum, can be reused

© ZTE Corporation. All rights reserved

# Potential WID Proposals

- A new work item is proposed to support the SL relay. The detailed objectives are listed as follows:
  - Service continuity enhancement for UE-to-Network relay [RAN2, RAN3]
    - Inter-gNB service continuity, indirect to indirect path switch
  - Specify mechanism for UE-to-UE relay: include both UE type SL relay and gNB/DU type SL relay [RAN2, RAN3]
    - Specify mechanisms for proximity discovery, routing path detection and selection between UEs with specific group [RAN2, RAN3]
    - Specify mechanisms for control plane and user plane protocol stack design [RAN2]
    - Specify mechanism for control plane procedure, e.g., connection management of relayed connection, bearer mapping and E2E QoS management [RAN2, RAN3]
    - Specify mechanism for UE authorization [RAN3]
  - Specify mechanism for multi-path SL relay if time allows. [RAN2]


© ZTE Corporation. All rights reserved

# Thanks

Tomorrow never waits