3GPP TSG RAN meeting #93e
Electronic meeting, Sept. 13-17, 2021
A.I. 9.0.2

RP-212101

Views on UL enhancements for Rel-18

Qualcomm

Summary after latest round of email discussions

[non-controversial]

- Uplink enhancements, with the following skeleton of the possible objectives:
  - Study and if necessary specify >4 Tx UL operation, e.g., for CPE/FWA/vehicle/Industrial devices [leading WG: RAN1]
  - Specify enhanced multi-panel uplink operation and/or enhanced multi-TRP uplink operation, potentially including fast UL panel selection, separate UL timings/power controls for different panel/TRP and/or simultaneous multi-panel UL transmission [leading WG: RAN1]
  - Study and if necessary specify frequency-selective precoding, mainly targeting devices with >=4 Tx [leading WG: RAN1]
  - Specify further coverage enhancements including PRACH enhancement for FR2 e.g., PRACH repetition with same or different beams [leading WG: RAN1]
  - Study and if necessary specify power domain enhancements e.g., dynamic power aggregation [leading WG: RAN4 or RAN1]
  - Potentially specify other UL enhancements e.g., enhancement for multi-carrier UL operation, enhancements for DFTS-OFDM, enhancement for UL CW mapping [leading WG: RAN1]

Confidential - Qualcomm Technologies, Inc. and/or its affiliated companies - May Contain Trade Secrets

Summary after latest round of email discussions

[controversial]

For >4 Tx UL operation,

- FFS: whether only some listed example device types are targeted or even other device types are also targeted
- FFS: target frequency range
- FFS: RAN4 as secondary WG

For enhanced multi-panel uplink operation and/or enhanced multi-TRP uplink operation,

- FFS: further clarification and narrowing down of the scope for this example area based on listed example scopes as starting point
- FFS: enhancements are based on Rel-17 unified TCI framework
- FFS: target frequency range
- FFS: RAN2/4 as secondary WG

For frequency-selective precoding,

- FFS: whether this example area can be generalized to enhanced uplink precoding
- FFS: target frequency range and target devices
- FFS: RAN4 as secondary WG

For further coverage enhancement and power domain enhancement

- FFS: further clarification and narrowing down of the scope for this example area based on listed example scopes as starting point
- FFS: other coverage enhancement e.g., DMRS-less PUCCH

For other potential UL enhancements

- FFS: further clarification and narrowing down of the scope for this example area based on listed example scopes as starting point
- FFS: other potential scope, e.g., enhancement for UL dense deployment

Confidential - Qualcomm Technologies, Inc. and/or its affiliated companies - May Contain Trade Secrets

Power-domain Enhancements: Dynamic Power Aggregation

- Background and Motivation
  - 4G **DL** CA has a long history of successful expansion
  - In contrast 4G **UL** CA is not successfully deployed
    - In the UL, the most sought-after resource is UE transmit power
    - In a large portion of a cell coverage area, the UE cannot efficiently use more than a fraction of the BW of a single carrier => it is perceived to be pointless to aggregate more UL CCs
  - Every band that the UE supports represents more transmit power potential

- Proposal: Introduce UL dynamic power aggregation in order to tap into this resource
  - Allow using to total available short term peak power
  - Long term (30 second) duty cycle control by the UE to maintain SAR compliance
  - Also applicable to UL-MIMO without CA
    - All available PAs in a band can used to transmit at full power

- Benefit
  - Provides needed UL peak data rate boost and correspondingly increased UL User Perceived Throughput

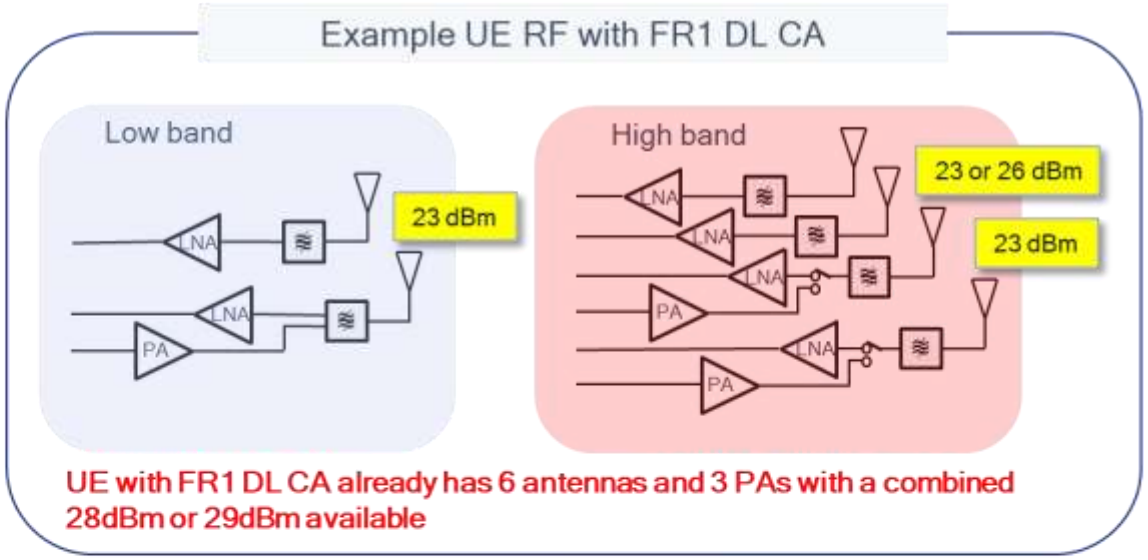

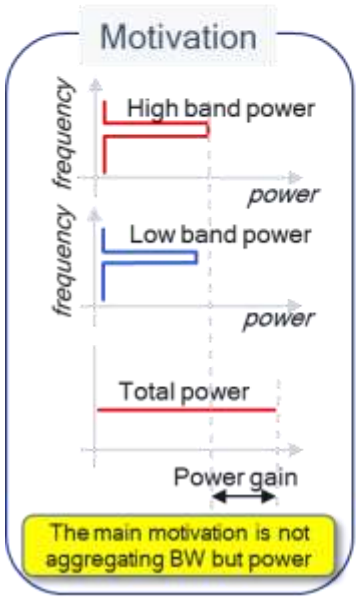

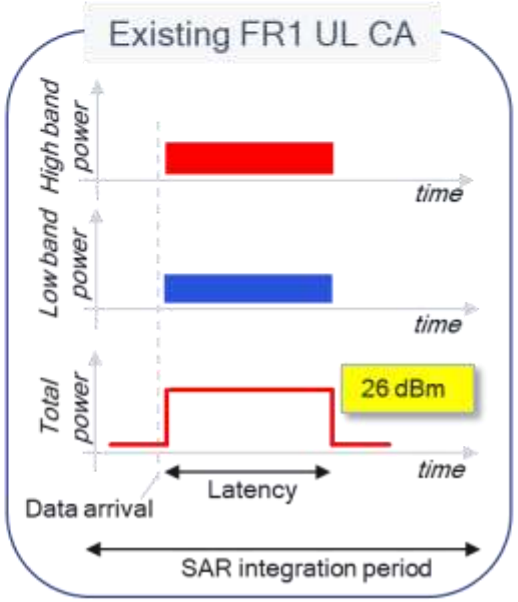

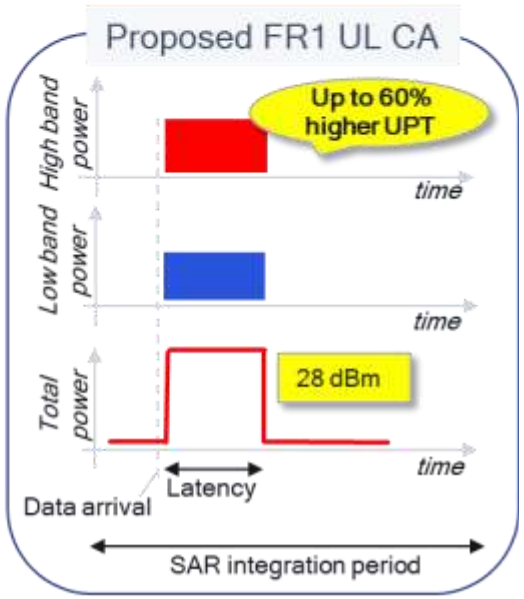

Confidential - Qualcomm Technologies, Inc. and/or its affiliated companies - May Contain Trade Secrets

Uplink precoding enhancement

- Precoding enhancement requires additional overhead in DCI, this additional overhead can be used to enhance frequency resolution but can be also used to enhance the resolution of the wideband precoding.
- Concerns on frequency selective precoding (which do not exist in wideband precoding enhancement)
  - DCI payload varies w.r.t. UL resource allocation
  - Increased MPR (max power reduction) of freq. selective precoding due to variable (per antenna port) PSD
    - E.g., if the precoder is oscillating between [1,0]^T and [0,1]^T, the PSD on each single Tx has on/off pattern which would create inter-modulation and would require larger MPR to meet RAN4 requirements.
- With this in mind, we make the following proposals:

- Study of frequency selective precoding should include RAN4 as secondary WG
- This example area should be generalized to include enhancements to wideband precoding

Confidential - Qualcomm Technologies, Inc. and/or its affiliated companies - May Contain Trade Secrets

Simultaneous Transmissions in FR1

- The current wording in the conclusion reads “simultaneous multi-panel UL transmission” and may only refer to FR2
- Scope of simultaneous UL transmissions should cover both FR1 and FR2 for the following reasons
  - Specification-wise, we don’t see extra effort to specify simultaneous UL transmission for FR1, on top of FR2.
  - function-wise, if this is only supported for FR2, the function would be considered as incomplete.
  - Separate capabilities can be introduced for FR1 and FR2 if some companies only want to implement it for FR2.
- Propose a revision as follows “simultaneous multi-panel/multi-antenna UL transmission” to ensure FR1 is in scope

Specify enhanced multi-panel uplink operation and/or enhanced multi-TRP uplink operation, potentially including fast UL panel selection, separate UL timings/power controls for different panel/TRP and/or simultaneous multi-panel/multi-antenna UL transmission [leading WG: RAN1]

Confidential - Qualcomm Technologies, Inc. and/or its affiliated companies - May Contain Trade Secrets

PUCCH Enhancements: Sequence-based PUCCH

Extend sequence based PUCCH beyond 2 bits UCI (up to 11 bits)

- In low SNR regime, DMRS-based coherent communication performs worse than DMRS-less noncoherent transmission, due to:
  - DMRS overhead
  - Bad channel estimation quality at low SNR
  - Existing PUCCH channel code (e.g., RM code for <=11 bits) is not optimized at low code rate
- Studied in R17 Cov. enh. with many companies reporting gains

Sequence based PUCCH

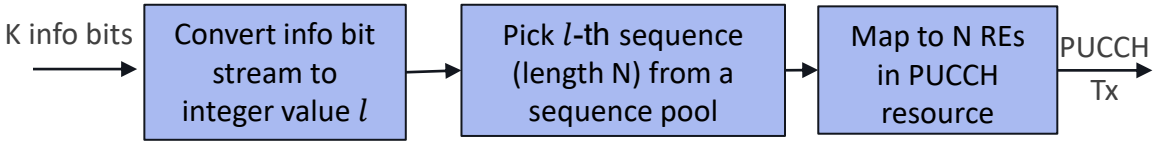

- **Proposal**: Support sequence-based DMRS-less noncoherent transmission for PUCCH (beyond format 0) to improve its link efficiency.
  - Orthogonal sequences for small payload size
  - Non-orthogonal sequences for medium payload size

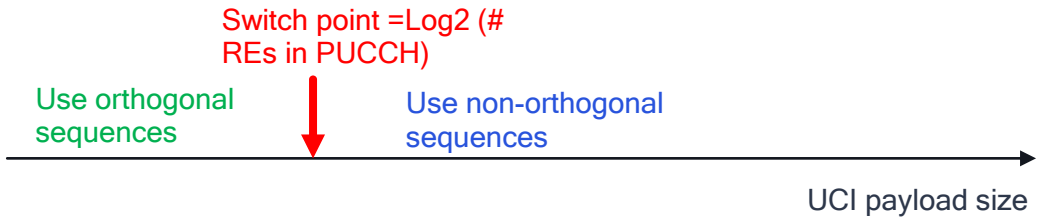

DFT-S-OFDM Enhancements

- Currently, there are two limitations on the use of DFT-S-OFDM:
  - Restricted to only single layer transmission in uplink
  - Switching between CP-OFDM and DFT-S-OFDM requires RRC reconfiguration
- Observations from NR deployments
  - Rank-2 channels occur frequently (especially in FR2) in uplink, even for cell-edge UEs
  - DFT-S-OFDM waveforms are not getting used even in scenarios where it would be beneficial to do so
    - Requiring RRC reconfiguration may be a barrier
- To address the above shortcomings, we propose the following

Specify mechanisms to enable DFT-S-OFDM waveform for transmissions with more than one layer and mechanisms for fast switching between DFT-S-OFDM and CP-OFDM.

Confidential - Qualcomm Technologies, Inc. and/or its affiliated companies - May Contain Trade Secrets

Qualcomm

Thank you

Follow us on:

For more information, visit us at:

www.qualcomm.com & www.qualcomm.com/blog

Nothing in these materials is an offer to sell any of the components or devices referenced herein.

©2018 Qualcomm Technologies, Inc. and/or its affiliated companies. All Rights Reserved.

Qualcomm is a trademark of Qualcomm Incorporated, registered in the United States and other countries. Other products and brand names may be trademarks or registered trademarks of their respective owners.

References in this presentation to “Qualcomm” may mean Qualcomm Incorporated, Qualcomm Technologies, Inc., and/or other subsidiaries or business units within the Qualcomm corporate structure, as applicable. Qualcomm Incorporated includes Qualcomm’s licensing business, QTL, and the vast majority of its patent portfolio. Qualcomm Technologies, Inc., a wholly-owned subsidiary of Qualcomm Incorporated, operates, along with its subsidiaries, substantially all of Qualcomm’s engineering, research and development functions, and substantially all of its product and services businesses, including its semiconductor business, QCT.