INTERNATIONAL TELECOMMUNICATION UNION

ITU-T G.8272/Y.1367

(01/2015)

TELECOMMUNICATION
STANDARDIZATION SECTOR
OF ITU

SERIES G: TRANSMISSION SYSTEMS AND MEDIA, DIGITAL SYSTEMS AND NETWORKS

Packet over Transport aspects – Synchronization, quality and availability targets

SERIES Y: GLOBAL INFORMATION INFRASTRUCTURE, INTERNET PROTOCOL ASPECTS AND NEXT-GENERATION NETWORKS

Internet protocol aspects – Transport

Timing characteristics of primary reference time clocks

CAUTION !

PREPUBLISHED RECOMMENDATION

This prepublication is an unedited version of a recently approved Recommendation. It will be replaced by the published version after editing. Therefore, there will be differences between this prepublication and the published version.

FOREWORD

The International Telecommunication Union (ITU) is the United Nations specialized agency in the field of telecommunications, information and communication technologies (ICTs). The ITU Telecommunication Standardization Sector (ITU-T) is a permanent organ of ITU. ITU-T is responsible for studying technical, operating and tariff questions and issuing Recommendations on them with a view to standardizing telecommunications on a worldwide basis.

The World Telecommunication Standardization Assembly (WTSA), which meets every four years, establishes the topics for study by the ITU-T study groups which, in turn, produce Recommendations on these topics.

The approval of ITU-T Recommendations is covered by the procedure laid down in WTSA Resolution 1.

In some areas of information technology which fall within ITU-T's purview, the necessary standards are prepared on a collaborative basis with ISO and IEC.

NOTE

In this Recommendation, the expression "Administration" is used for conciseness to indicate both a telecommunication administration and a recognized operating agency.

Compliance with this Recommendation is voluntary. However, the Recommendation may contain certain mandatory provisions (to ensure, e.g., interoperability or applicability) and compliance with the Recommendation is achieved when all of these mandatory provisions are met. The words "shall" or some other obligatory language such as "must" and the negative equivalents are used to express requirements. The use of such words does not suggest that compliance with the Recommendation is required of any party.

INTELLECTUAL PROPERTY RIGHTS

ITU draws attention to the possibility that the practice or implementation of this Recommendation may involve the use of a claimed Intellectual Property Right. ITU takes no position concerning the evidence, validity or applicability of claimed Intellectual Property Rights, whether asserted by ITU members or others outside of the Recommendation development process.

As of the date of approval of this Recommendation, ITU [had/had not] received notice of intellectual property, protected by patents, which may be required to implement this Recommendation. However, implementers are cautioned that this may not represent the latest information and are therefore strongly urged to consult the TSB patent database at http://www.itu.int/ITU-T/ipr/.

© ITU 2015

All rights reserved. No part of this publication may be reproduced, by any means whatsoever, without the prior written permission of ITU.

Recommendation ITU-T G.8272/Y.1367

Timing characteristics of primary reference time clocks

Summary

Recommendation ITU-T G.8272/Y.1367 specifies the requirements for primary reference time clocks (PRTCs) suitable for time, phase and frequency synchronization in packet networks. It defines the error allowed at the time output of the PRTC.

These requirements apply under the normal environmental conditions specified for the equipment.

Recommendation ITU-T G.8272/Y.1367

Timing characteristics of primary reference time clocks

Scope

This Recommendation specifies the requirements for primary reference time clocks (PRTCs) suitable for time, phase, and frequency synchronization in packet networks. These requirements apply under the normal environmental conditions specified for the equipment.

A typical PRTC provides the reference signal for time, phase and frequency synchronization for other clocks within a network or section of a network. In particular, the PRTC can also provide the reference signal to the telecom grand master (T-GM) within the network nodes where the PRTC is located.

The PRTC provides a reference time signal traceable to a recognized time standard (e.g., UTC). UTC can be obtained from a UTC time laboratory registered at BIPM (e. g., a national UTC time lab) or, most commonly, from GNSS.

This Recommendation defines the PRTC output requirements. The accuracy of the PRTC should be maintained as specified in this Recommendation.

This Recommendation also covers the case where a PRTC is integrated with a telecom grand master (T-GM) clock. In this case it defines the performance at the output of the combined PRTC and T-GM function, i.e., the PTP messages.

2 References

The following ITU-T Recommendations and other references contain provisions which, through reference in this text, constitute provisions of this Recommendation. At the time of publication, the editions indicated were valid. All Recommendations and other references are subject to revision; users of this Recommendation are therefore encouraged to investigate the possibility of applying the most recent edition of the Recommendations and other references listed below. A list of the currently valid ITU-T Recommendations is regularly published. The reference to a document within this Recommendation does not give it, as a stand-alone document, the status of a Recommendation.

[ITU-T G.703] Recommendation ITU-T G.703 (2001), *Physical/electrical characteristics of hierarchical digital interfaces*.

[ITU-T G.810] Recommendation ITU-T G.810 (1996), *Definitions and terminology for synchronization networks*.

[ITU-T G.811] Recommendation ITU-T G.811 (1997), *Timing characteristics of primary reference clocks*.

[ITU-T G.8260] Recommendation ITU-T G.8260 (2012), *Definitions and terminology for synchronization in packet networks*.

[ITU-T G.8271] Recommendation ITU-T G.8271/Y.1366 (2012), *Time and phase synchronization aspects of packet networks*.

[ITU-T G.8273] Recommendation ITU-T G.8273/Y.1368 (2013), *Framework of phase and time clocks*.

[IEEE 1588-2008] IEEE Std 1588™-2008, *Standard for a Precision Clock Synchronization Protocol for Networked Measurement and Control Systems.*

3 Definitions

Definitions related to synchronization are contained in [ITU-T G.810] and [ITU-T G.8260].

4 Abbreviations and acronyms

This Recommendation uses the following abbreviations and acronyms:

GNSS	Global Navigation Satellite System
GPS	Global Positioning System
MTIE	Maximum Time Interval Error
PRC	Primary Reference Clock
PRTC	Primary Reference Time Clock
PTP	Precision Time Protocol
RF	Radio Frequency
SSU	Synchronization Supply Unit
T-GM	Telecom Grand Master
TDEV	Time Deviation
UTC	Coordinated Universal Time

5 Conventions

None.

6 Time error, wander and jitter in locked mode

The noise generation of a PRTC clock is characterized by two main aspects:

– the constant time error (time offset) at its output compared to the applicable primary time standard (e.g., UTC);

– the amount of phase error (wander and jitter) produced at its output.

For characterization of the second aspect described above (phase error) the calculation of the maximum time interval error (MTIE) and the time deviation (TDEV) is useful.

Clause 6.1 defines the time error requirements applicable at the output of the PRTC, which corresponds to the combination of the two aspects described above (constant time error and phase error). No requirement is defined for the constant time error component taken alone, only when it is combined with the phase error.

Clauses 6.2 and 6.3 define the wander and jitter requirements applicable at the output of the PRTC, which correspond to the second aspect described above (phase error).

The performance specified in clauses 6.1 and 6.2 also applies to the output of the combined PRTC and T-GM function when integrated into a single piece of equipment. Therefore, there is no additional allowance for the inclusion of the T-GM function.

NOTE – Optimization of the noise inside the equipment is possible by combining the two functions. Therefore, the total noise of equipment that integrates the PRTC and T-GM can be the same as equipment that only contains the PRTC.

6.1 Time error in locked mode

Under normal, locked operating conditions, the time output of the PRTC or combined PRTC and T-GM function should be accurate to within 100 ns or better when verified against of the applicable primary time standard (e.g., UTC). For the PRTC this value includes all the noise components, i.e., the constant time error (time offset) and the phase error (wander and jitter) of the PRTC. For the combined PRTC and T-GM function the same applies, except the samples are processed using the method specified in [ITU-T G.8273] to address timestamp quantization.

Normal, locked operating conditions mean that:

– The PRTC is fully locked to the incoming reference time signal, and is not operating in warm-up.

– There are no failures or facility errors in the reference path, including but not limited to antenna failures.

– The environmental conditions are within the operating limits specified for the equipment.

– The equipment is properly commissioned and calibrated for fixed offsets such as antenna cable length, cable amplifiers and receiver delays.

– The reference time signal (e.g., GNSS signal) is operating within limits, as determined by the relevant operating authorities.

– If the reference time signal is operated over a radio system such as a global navigation satellite system (GNSS), multipath reflections and interference from other local transmissions, such as jamming, must be minimized to an acceptable level.

– There are no extreme propagation anomalies, such as severe thunderstorms.

6.2 Wander in locked mode

When the PRTC clock is in the normal, locked mode of operation, the wander, expressed in MTIE, measured using a similar configuration as the synchronized clock configuration defined in Figure 1a of [ITU-T G.810] (with the use of a time standard instead of a frequency standard), should have the following limits:

Table 1 – Wander generation (MTIE)

MTIE limit [µs]	Observation interval τ [s]
$0.275 \times 10^{-3}\tau + 0.025$	$0.1 < \tau \leq 273$
0.10	$\tau > 273$

The resultant requirements are shown in Figure 1.

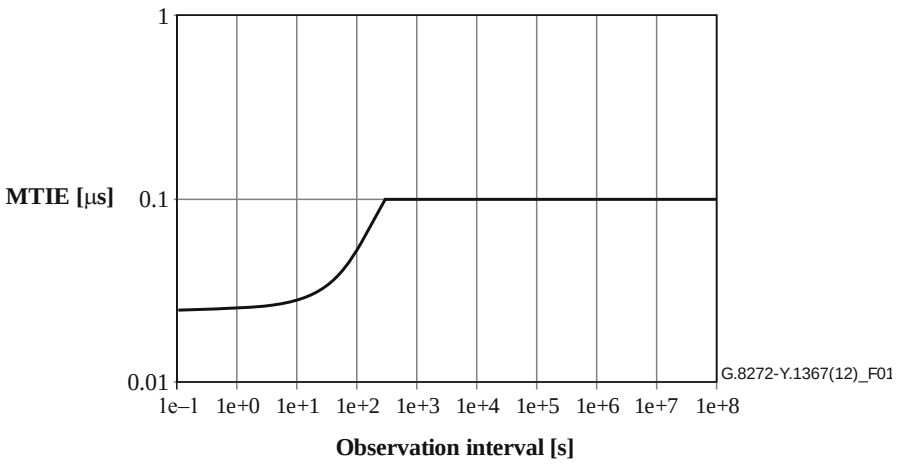

Figure 1 – MTIE as a function of an observation (integration) period τ

NOTE 1 – For the 1PPS output interface, the MTIE is applicable above a 1 second observation period.

When the PRTC clock is in the normal, locked mode of operation, the wander, expressed in TDEV, measured using a similar configuration as the synchronized clock configuration defined in Figure 1a of [ITU-T G.810] (with the use of a time standard instead of a frequency standard), should have the following limits:

Table 2 – Wander generation (TDEV)

TDEV limit [ns]	Observation interval τ [s]
3	$0.1 < \tau \leq 100$
$0.03\ \tau$	$100 < \tau \leq 1\ 000$
30	$1\ 000 < \tau < 10\ 000$

The resultant requirements are shown in Figure 2.

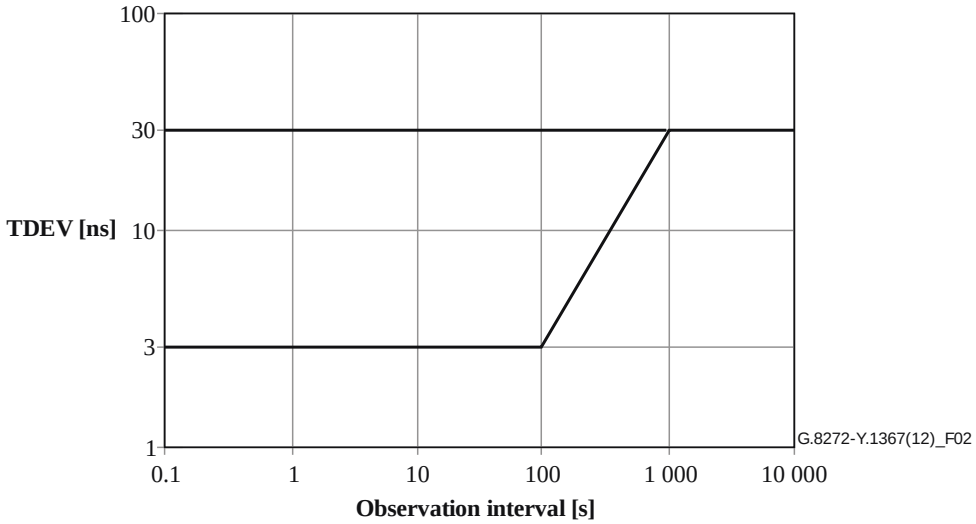

Figure 2 – TDEV as a function of an observation (integration) period τ

NOTE 2 – For the 1PPS output interface, the TDEV is applicable above a 1 second observation period.

The applicable MTIE and TDEV requirements for 1PPS output interfaces are based on the time interval error of the 1PPS signal taken at one sample per second and without any low-pass filtering.

The applicable MTIE and TDEV requirements for 2 048 kHz, 2 048 kbit/s and 1 544 kbit/s output interfaces are measured through an equivalent 10 Hz, first-order, low-pass measurement filter, at a maximum sampling time τ_0 of 1/30 seconds.

The applicable MTIE and TDEV requirements for an Ethernet interface carrying PTP messages are applied after averaging over at least 100 consecutive samples, to avoid errors caused by timestamp quantization, or any quantization of packet position in the test equipment.

6.3 Jitter

While most specifications in this Recommendation are independent of the output interface at which they are measured, this is not the case for jitter production; jitter generation specifications must utilize existing specifications that are currently specified differently for different interface rates. These requirements are stated separately for some of the interfaces identified in clause 9. The applicable jitter requirements for 2 048 kHz, 2 048 kbit/s and 1 544 kbit/s output interfaces are defined in [ITU-T G.811].

The intrinsic jitter for the other interfaces identified in clause 9 is for further study.

7 Holdover

When a PRTC clock loses all its input phase and time references, it enters the phase/time holdover state. Under these circumstances, the PRTC clock may either rely on the holdover of a local oscillator, or on an optional external input frequency reference traceable to a primary reference clock (PRC), or on a combination of both.

This requirement bounds the maximum excursions in the output timing signal. Additionally, it restricts the accumulation of the phase movement during input signal impairments or internal disturbances.

The phase/time holdover requirements applicable to a PRTC are for further study.

8 Phase discontinuity

The phase discontinuity for a PRTC is for further study.

9 Interfaces

The requirements in this Recommendation are related to reference points which may be internal to the equipment or NE in which the PRTC is embedded and are therefore not necessarily available for measurement or analysis by the user. Consequently, the performance of the PRTC is not specified at these internal reference points, but rather at the external interfaces of the equipment.

Note that not all of the interfaces below need to be implemented on all equipment.

9.1 Phase and time interfaces

The output phase and time interfaces specified for the equipment in which the PRTC clock may be contained are:

– ITU-T V.11-based time/phase distribution interface, as defined in [ITU-T G.703] and [ITU-T G.8271];

– 1PPS 50 Ω phase-synchronization measurement interface, as defined in [ITU-T G.703] and [ITU-T G.8271];

– Other interfaces are for further study.

– Ethernet interface carrying PTP messages

NOTE – Ethernet interfaces can combine synchronous Ethernet for frequency and PTP messages.

9.2 Frequency interfaces

In addition to phase and time interfaces, frequency interfaces may be used, at least one frequency output must be provided The output frequency interfaces specified for the equipment in which the PRTC clock may be contained are:

– 2 048 kHz interfaces according to [ITU-T G.703] with additional jitter and wander requirements as specified herein;

– 1 544 kbit/s interfaces according to [ITU-T G.703] with additional jitter and wander requirements as specified herein;

– 2 048 kbit/s interfaces according to [ITU-T G.703] with additional jitter and wander requirements as specified herein;

– synchronous Ethernet interfaces;

NOTE – Ethernet interfaces can combine PTP messages and synchronous Ethernet – ITU-T V.11-based time/phase distribution interface, as defined in [ITU-T G.703] and [ITU-T G.8271];

– 1PPS 50 Ω phase-synchronization measurement interface, as defined in [ITU-T G.703] and [ITU-T G.8271]

– other interfaces are for further study.

The optional input frequency interfaces specified for the equipment in which the PRTC clock may be contained are for further study.

Appendix I

Measuring the performance of a PRTC and a PRTC combined with T-GM

(This appendix does not form an integral part of this Recommendation.)

The time error of a PRTC output is difficult to measure because time is a relative quantity. Unlike frequency, there is no such thing as a "time generator"; it always has to be compared back to a standard such as UTC. Even UTC itself is only known in retrospect, by comparing the outputs of many national time standards over a period of time.

NOTE 1 – The accuracy of the PRTC performance test is for further study.

NOTE 2 – The test details of a PRTC combined with T-GM is in [ITU-T G.8273].

I.1 Factors influencing the performance of a GNSS-based PRTC

The most common type of PRTC is one that distributes the time using radio signals from a GNSS system. However, the performance of a GNSS system is dependent on a range of issues outside the control of the equipment vendor. Therefore, any vendor specification can only indicate what the equipment is capable of, rather than what performance the equipment will actually deliver in any given installation.

In measuring the performance of a GNSS-based PRTC, the following conditions should be verified as far as possible:

- The equipment is properly commissioned and calibrated for fixed offsets such as antenna cable length and cable amplifiers. For example, an antenna cable will produce a delay of approximately 4 ns/m, depending on the cable type.
- Any 1PPS output signal asymmetry compensation contained within the PRTC (such as that described in clause A.1.2 of [ITU-T G.8271]) is stable.
- The antenna has a clear view of the sky with minimal multipath distortion. This may be verified by recording the number of satellites visible throughout the measurement.
- The GNSS or radio distribution system is properly maintained and operated by the relevant authorities. This may be verified by checking the operational status bulletins issued by the relevant operating authorities.

In addition to these primary factors, there are some secondary conditions which may cause errors in the time measured by a GNSS system. These factors may be more difficult to quantify or to mitigate against. Secondary factors may include:

- interference from ground level transmissions. While filters may be used to remove some ground level interference, this may not protect against local jamming. The presence of jamming may be verified by using interference detection equipment;
- atmospheric conditions such as thunderstorms and heavy rain or fog;
- solar interference such as sunspots and flares, affecting ionosphere delay.

I.2 Phase wander measurement

It is possible to measure the phase wander of a PRTC relative to a PRC-quality frequency reference, such as a caesium clock. A time interval counter is used to compare the phase of a 1 pulse-per-second (1PPS) output signal from the PRTC against that of a PRC. The experimental set-up is shown in Figure I.1:

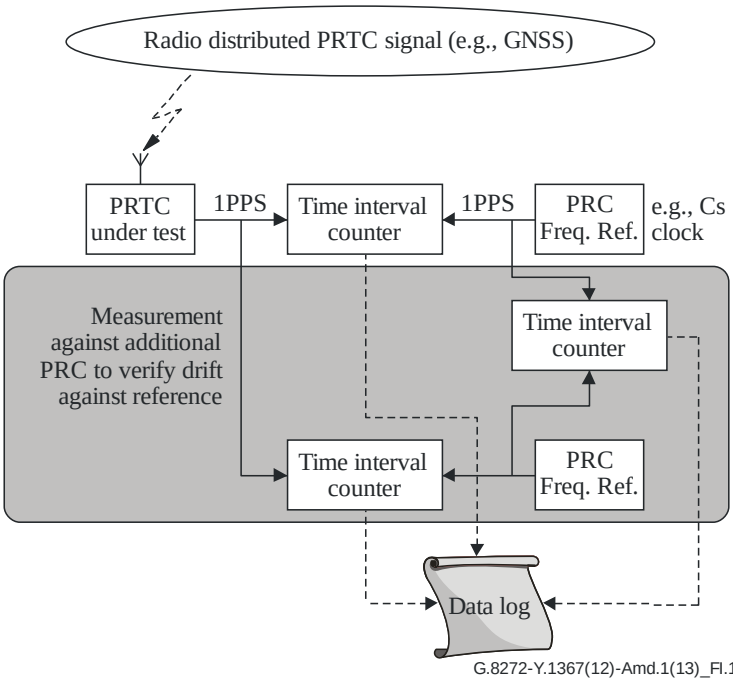

Figure I.1 – Measuring phase wander of a PRTC

Where a combined PRTC and T-GM function is to be tested, the time interval counter can be replaced by a packet timing monitor device, as shown in Figure I.2:

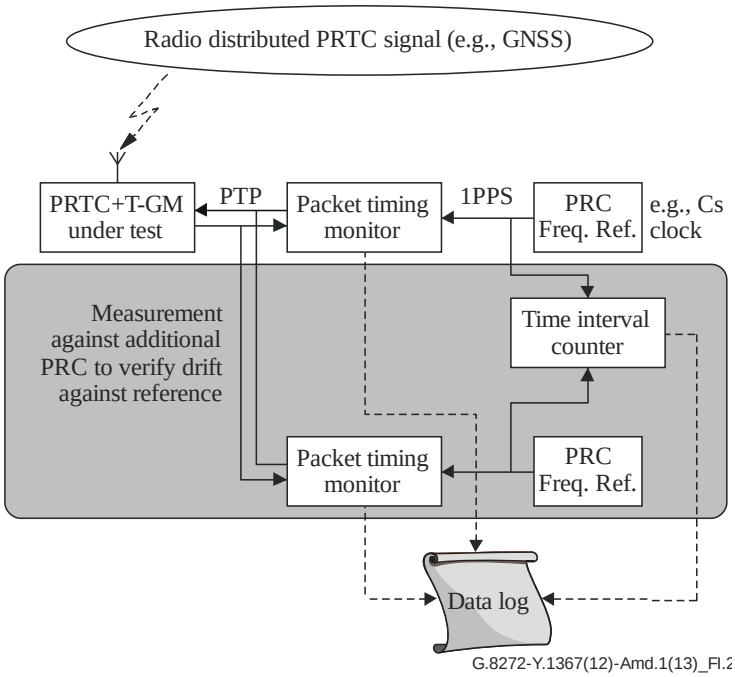

Figure I.2 – Measuring phase wander of a combined PRTC and T-GM

The wander of a caesium reference clock is extremely low, although it may have a slight offset to UTC frequency. For a PRC, this is guaranteed to be within 1 part in 10^{11}, but typical caesium references have much better performance. This frequency offset causes a tilt in the phase plot, which must be removed to reveal the wander performance of the PRTC.

In order to distinguish between wander of the PRTC and that of the PRC, a second PRC can be used to make a three-way comparison. This is shown in Figures I.1 and I.2 by the components in the shaded boxes. This additional check may be omitted if not required.

Since the caesium reference is only a source of frequency and not time, this experiment only indicates phase wander, and cannot measure the time error from the GNSS system time. However, it does indicate that if the static error can be measured and calibrated out, the PRTC is capable of maintaining time within certain limits.

I.3 Time error measurements

In order to determine the maximum time error of a PRTC, it is necessary to compare it to another source of accurate time.

I.3.1 Comparison against a reference receiver

In the laboratory context, an accurate source of time might be another GNSS receiver of known uncertainty, or a "reference receiver". The experimental set-up is very similar to the wander measurement, but substituting the reference receiver for the caesium PRC. A time interval counter is used to compare the time difference of a 1 pulse-per-second (1PPS) output signal from the PRTC against that of the reference receiver. The experimental set-up is shown in Figure I.3:

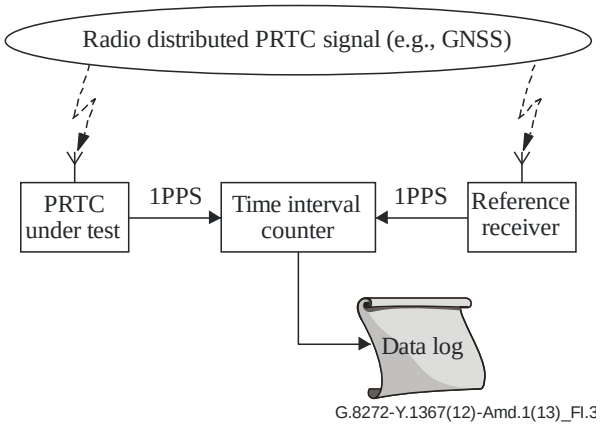

Figure I.3 – Comparing time accuracy against a reference receiver

For a combined PRTC and T-GM function, the time interval counter can be replaced by a packet timing monitor, as shown in Figure I.4 below:

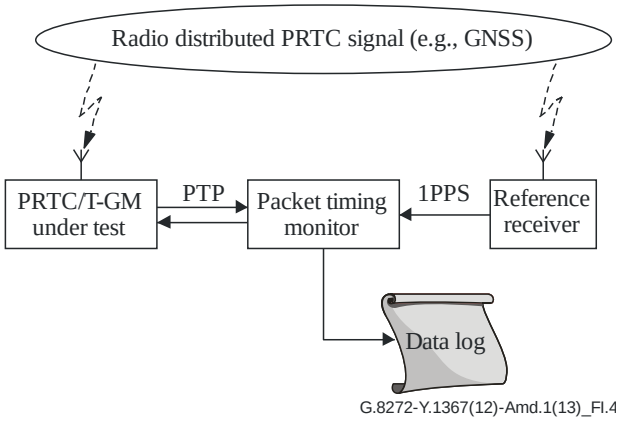

Figure I.4 – Comparing time accuracy of a PRTC and T-GM against a reference receiver

In this set-up, the reference receiver should ideally have a significantly better performance than the PRTC in order for the results to be valid. Since the PRTC time error specification is approaching the limits of what is possible using a GNSS system, this type of measurement is able to give an indication that the time accuracy is in the right area, rather than prove that the accuracy specification has been met.

It should be noted that if the reference receiver performance is not significantly better than the PRTC under test, then it is impossible to verify if the equipment under test is within its specification. It can only be used for a basic test to quickly evaluate whether or not the PRTC has potential major problems. The reason is that if the reference receiver has the same performance as the PRTC, the measured MTIE, TDEV and max|TE| could be as much as twice the PRTC MTIE, TDEV, and max|TE| requirement or as small as zero.

The reference receiver approach may be improved by using a collection of reference receivers. For example, if three receivers or more are used, it is possible to use a "majority voting" system to determine the performance of the PRTC under test. It is also possible to estimate the variance of individual receivers. The experimental set-up is shown in Figure I.5.

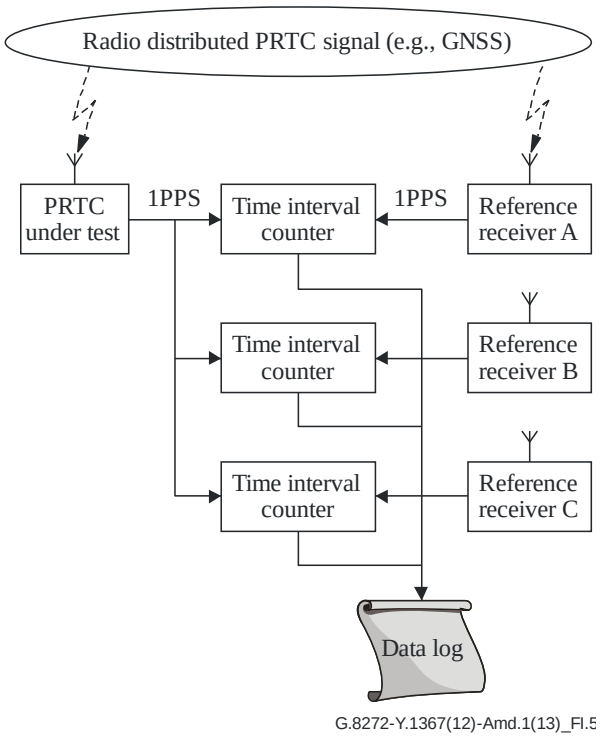

Figure I.5 – Comparing time accuracy against multiple reference receivers

For a combined PRTC and T-GM function, the time interval counters can be replaced by packet timing monitors.

I.3.2 Calibration against national time standard

In order to prove that the time error relative to a given time standard is within acceptable limits, it is necessary to compare the PRTC to a much more accurate source of time. For example, this may be obtained from a national time laboratory. Either the measurement will need to be made at the laboratory itself, or an accurate time distribution system will need to be used, such as dedicated cable or fibre, or a GNSS common-view time service. This type of measurement may be used to

characterize the performance of a reference receiver. The experimental set-up is shown in Figure I.6.

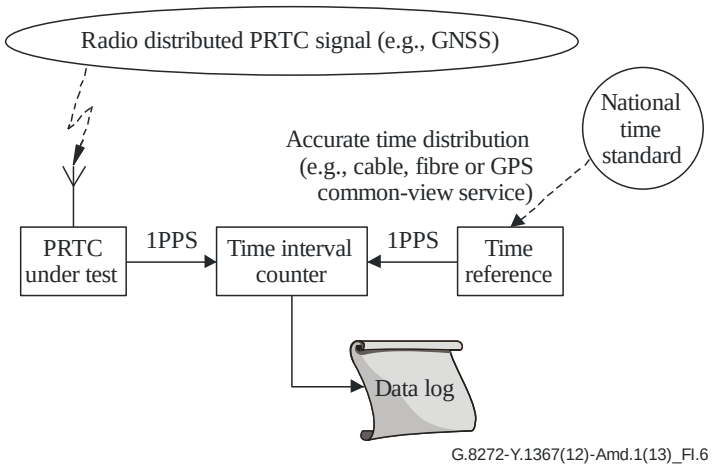

Figure I.6 – Measuring time accuracy against a national time standard

For a combined PRTC and T-GM function, the time interval counters can be replaced by a packet timing monitor.

I.3.3 Comparison against a GNSS Simulator

GNSS simulators generate an RF signal, mimicking the signal that would be obtained from a satellite constellation, including the apparent "motion" of the satellites, the appearance and disappearance as they come up over the horizon and subsequently set. The simulator can be programmed with the "position" and "time" of the device under test at a given time and date, producing the correct satellite signals that would be observed from a receiver at that location and time.

Some simulators are also capable of generating common signal impairments, such as might be caused by a limited sky view, atmospheric disturbance and multipath reflections. A full test of a PRTC should include the ability of the PRTC to withstand such impairments.

A 1PPS output and time-of-day output is also produced by the simulator, synchronized to the RF signals generated. This 1PPS/ToD signal may be compared to the output of a PRTC/T-GM under test to verify the accuracy of the device under test.

This monitor compares the time and phase indicated by the PTP and 1PPS outputs from the device under test to the 1PPS/ToD generated by the simulator. Any difference between the two is the time or phase error produced by the device under test. A time interval counter is used to compare the time difference of a 1 pulse-per-second (1PPS) output signal from the PRTC against that of the reference receiver. The experimental setup is shown in Figure I.7:

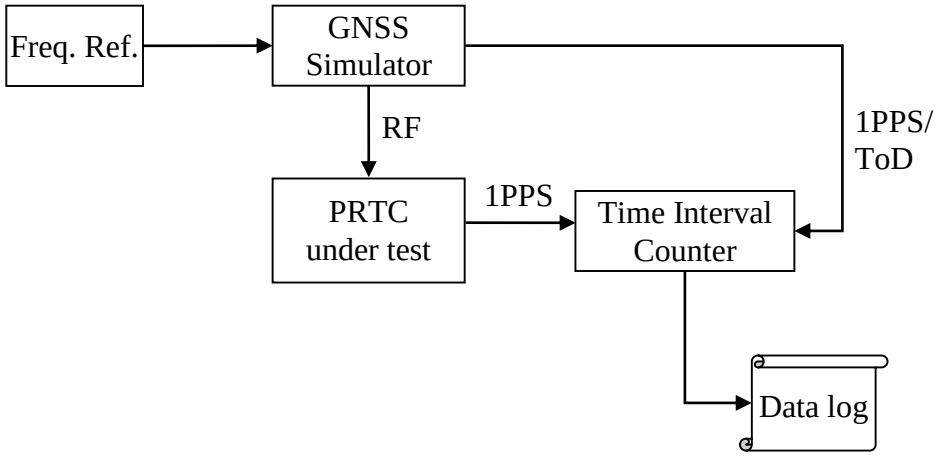

Figure I.7 - Comparing Time Accuracy of a PRTC against a GNSS Simulator

For a combined PRTC and T-GM function, the Time Interval Counter can be replaced by a Packet Timing Monitor, as shown in Figure I.8 below:

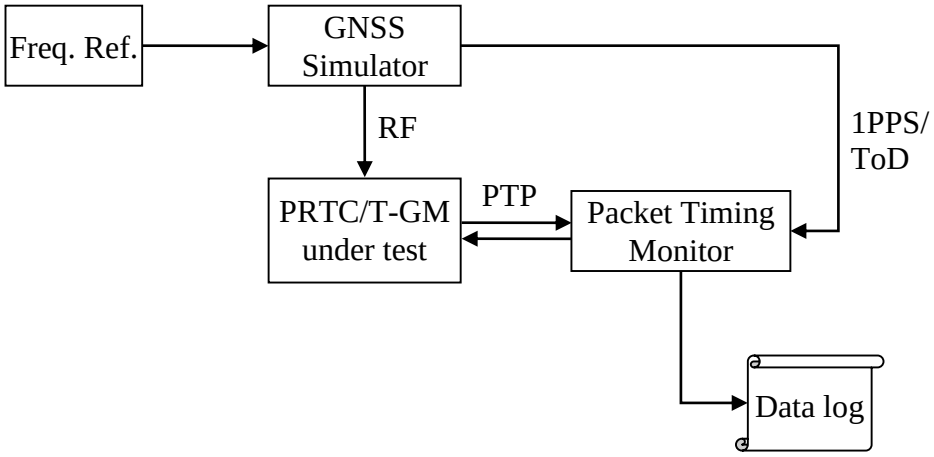

Figure I.8 - Comparing Time Accuracy of a PRTC and T-GM against a GNSS Simulator

In this setup, the alignment of the RF output and 1PPS signals from the GNSS simulator should ideally be better than 5ns in order to prove the G.8272 accuracy specification of less than 100ns, the MTIE specification, and the TDEV specification have been met.

As the measurements must be made over a long time period, the GNSS simulator should be driven by a stable frequency reference input, such as PRC or other stable atomic clock. The stability of this clock should be sufficient to ensure the wander is below the bandwidth of the PRTC under test.

Appendix II

PRTC functional model

(This appendix does not form an integral part of this Recommendation.)

A simplified model of the PRTC is provided in this appendix to describe its functionality and to define the various interfaces and functions that collectively define a PRTC.

Figure II.1 represents a functional model and it is not intended to specify any specific implementation.

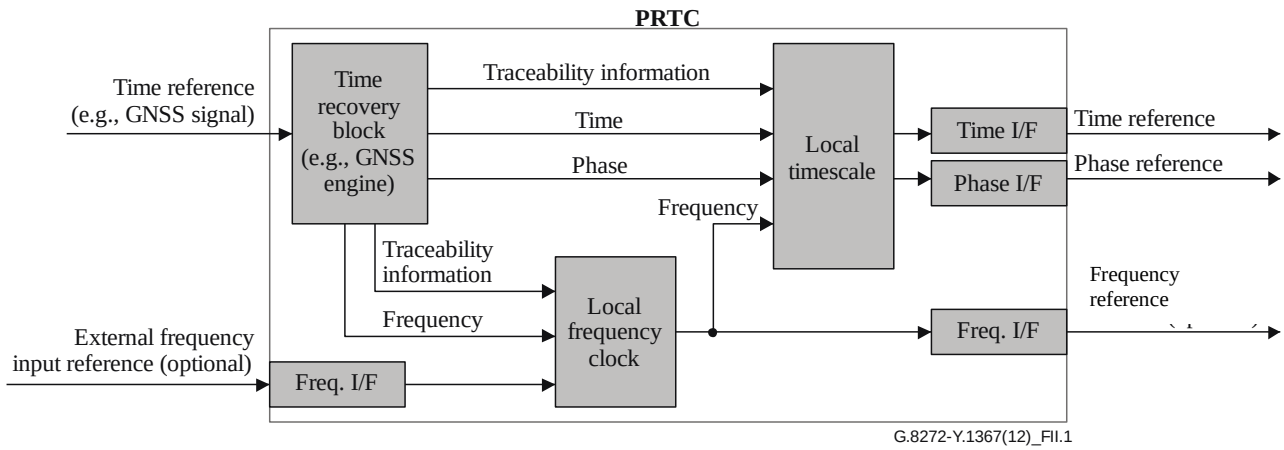

Figure II.1 – PRTC functional model

NOTE – The output interfaces shown in Figure II.1 correspond to logical interfaces; in some PRTC implementations, the time logical interface and the phase logical interface may be merged into the same phase/time physical interface. In addition to the time reference, the time logical interface may carry associated information on the traceability of the reference.

The main function of a PRTC is to deliver a primary time reference to be used in time and/or phase synchronization of other clocks of the network.

A PRTC clock receives a time reference from a system having access to a recognized primary time standard (e.g., from a global navigation satellite system or from a national laboratory participating in time standards generation) and delivers this reference signal to other clocks within a network or section of a network.

In addition, a PRTC clock may include input frequency interfaces, but it must implement at least one output frequency interface. When connected to a frequency reference traceable to a PRC, the optional input frequency interface may be used to maintain the local representation of the timescale during outages of the input time reference (i.e., extend the phase/time holdover period of the clock). A possible use of the optional output frequency interface may be to measure the phase noise of the PRTC with traditional telecom signals.

Finally, the PRTC clock may also deliver traceability information, reflecting the status of the clock (i.e., locked on its input reference signal, in holdover, etc.). The details of this traceability information are for further study.

The functionality of the PRTC is defined based on the individual blocks in Figure II.1. A description of the functions is provided in Table II.1. Note that the specific grouping of the functions is for description only and is not intended to specify how the PRTC may be implemented.

Table II.1 – PRTC functions

Time recovery	Receives and processes the external time interface (e.g., from GNSS antenna). Provides output signals to generate frequency, phase and time. Provides traceability information.
Local frequency clock	The frequency clock generates the internally-used frequency timing signals. In the case of loss of signal by the time recovery engine, the clock may either go into holdover, or switch to the optional incoming frequency reference (if present). Details of this clock are for further study, although it is expected that the bandwidth will be significantly low given the output specification of the PRTC.
Local timescale	Maintains the local representation of the primary timescale, based on the frequency generated by the local frequency clock. This block also generates the time and phase reference output signals.
I/F	Interface function necessary to generate a physical signal.

Appendix III

Information exchanged over the time interface

(This appendix does not form an integral part of this Recommendation.)

The PRTC includes three output interfaces to carry frequency, phase and time.

NOTE – These interfaces correspond to logical interfaces; in some PRTC implementations, the time logical interface and the phase logical interface may be merged into the same phase/time physical interface.

The time interface supports the output of time and status information from the PRTC. The time and status information is carried in messages. The format of the messages is for further study. An example of information that could be transferred over the time interface is provided in Table III.1.

Table III.1 – Example of time and status information

Name	Description
Time	International atomic time, TAI (seconds)
Leap seconds	Leap seconds (offset between TAI and UTC)
Leap second addition/subtraction flags	Provides advance notification of the occurrence of a leap second
Status	Provides an indication of whether the signal is locked, in holdover, or should not be used.

Appendix IV

PRTC locations

(This appendix does not form an integral part of this Recommendation.)

When considering phase/time distribution, the PRTC functions can be located at different positions, depending on the overall architecture that the network operator wishes to follow. In general, these can be summarized into the four generic locations A, B, C and D described in this clause, and illustrated in Figure IV.1 below.

NOTE – A packet master/T-GM (not shown in the figure) is in general co-located with the PRTC, for instance, in case the PRTC delivers the time synchronization to remote locations.

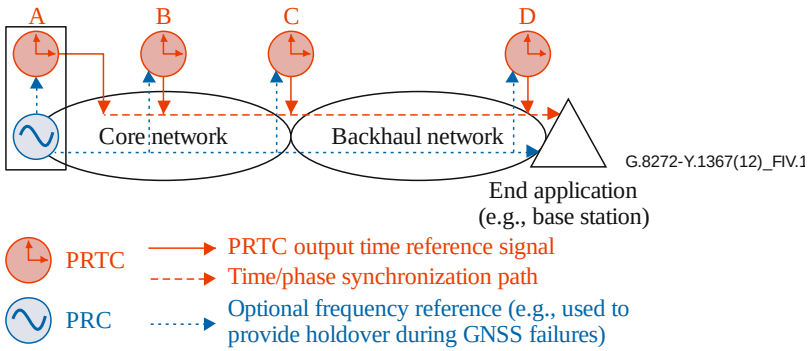

Figure IV.1 – Generic locations for a PRTC function

It should be noted that deploying the PRTC functions closer to the end application implies deploying a larger number of PRTC functions than in centralized locations, but it also has advantages. For instance, it simplifies the task of calibrating properly the asymmetry of the links from the PRTC to the end application. In this case, a smaller number of links would need to be calibrated in order to avoid the accumulation of excessive time error.

- Case A: centralized PRTC co-located with PRC

  In case A, the PRTC is co-located with the PRC in the core network, and may receive a frequency reference from the PRC (the two functions may be integrated within the same equipment). The time synchronization reference is then delivered from the PRTC via the packet master all along the core network and the backhaul network, down to the end application (e.g., base station), for instance, using a time protocol such as PTPv2.

- Case B: centralized PRTC not co-located with PRC

  In case B, the PRTC is located in the core network, but not co-located with the PRC; in general, the PRTC is in this case co-located with a synchronization supply unit (SSU) (the two functions may be integrated within the same equipment, typically a GNSS receiver is added to the SSU), and may receive a frequency reference from this SSU. The time synchronization reference is then delivered from the PRTC via a packet master (T-GM) all along the core network and the backhaul network, down to the end application (e.g., base station), for instance, using a time protocol such as PTPv2.

- Case C: PRTCs in aggregation sites

  In case C, the PRTC is located in an aggregation site; typically a GNSS receiver is added to one of the last SSUs of the physical layer frequency chain. The time synchronization reference is then delivered from the PRTC via a packet master (T-GM) all along the backhaul network, down to the end application (e.g., base station), for instance, using a time protocol such as PTPv2.

- Case D: PRTCs at the edge of the network

  In case D, the PRTC function is now located directly at the edge of the network (e.g., cell site); typically a GNSS receiver is directly connected to the end application (e.g., base stations). In this case, in general, the time synchronization reference is directly delivered from the PRTC to the end application (e.g., base station).