WORKING TEXT

STRAW BALLOT

bbf2012.144

WT-221a1

TR-221 Amendment 1

Revision: 07
Revision Date: June 2013

Notice

The Broadband Forum is a non-profit corporation organized to create guidelines for broadband network system development and deployment. This Broadband Forum Working Text is a draft, and has not been approved by members of the Forum. Even if approved, this Broadband Forum Working Text is not binding on the Broadband Forum, any of its members, or any developer or service provider. This Broadband Forum Working Text is subject to change. This Broadband Forum Working Text is copyrighted by the Broadband Forum, and portions of this Broadband Forum Working Text may be copyrighted by Broadband Forum members. This Working Text is for use by Broadband Forum members only. Advance written permission by the Broadband Forum is required for distribution of this Broadband Forum Working Text in its entirety or in portions outside the Broadband Forum.

This Broadband Forum Working Text is provided AS IS, WITH ALL FAULTS. Any person holding a copyright in this Broadband Forum WORKING TEXT, or any portion thereof, disclaims to the fullest extent permitted by law any representation or warranty, express or implied, including, but not limited to, any warranty:

(A) OF ACCURACY, COMPLETENESS, MERCHANTABILITY, FITNESS FOR A PARTICULAR PURPOSE, NON-INFRINGEMENT, OR TITLE;
(B) THAT THE CONTENTS OF THIS BROADBAND FORUM WORKING TEXT ARE SUITABLE FOR ANY PURPOSE, EVEN IF THAT PURPOSE IS KNOWN TO THE COPYRIGHT HOLDER;
(C) THAT THE IMPLEMENTATION OF THE CONTENTS OF THE WORKING TEXT WILL NOT INFRINGE ANY THIRD PARTY PATENTS, COPYRIGHTS, TRADEMARKS OR OTHER RIGHTS.

© The Broadband Forum. All rights reserved.

By using this Broadband Forum Working Text, users acknowledge that there is no obligation upon Broadband Forum members to license patents that are necessary to implement a Working Text, and such licensing obligations as may exist with respect to Broadband Forum Technical Reports do not attach until a proposed Technical Report is finalized by the Broadband Forum.

ANY PERSON HOLDING A COPYRIGHT IN THIS BROADBAND FORUM WORKING TEXT, OR ANY PORTION THEREOF, DISCLAIMS TO THE FULLEST EXTENT PERMITTED BY LAW (A) ANY LIABILITY (INCLUDING DIRECT, INDIRECT, SPECIAL, OR CONSEQUENTIAL DAMAGES UNDER ANY LEGAL THEORY) ARISING FROM OR RELATED TO THE USE OF OR RELIANCE UPON THIS WORKING TEXT; AND (B) ANY OBLIGATION TO UPDATE OR CORRECT THIS WORKING TEXT.

The text of this notice must be included in all copies of this Broadband Forum Working Text.

 © The Broadband Forum. All rights reserved

Revision History

Revision Number	Revision Date	Revision Editor	Changes
00	March 2012	Bala'zs Varga, Ericsson	Original
01	July 2012	Bala'zs Varga, Ericsson	Added contributions: 2012.554.01, 2012.556.02, 2012.558.02
02	November 2012	Bala'zs Varga, Ericsson	Added contributions: 2012.982.01, 2012.1156.02
03	December 2012	Bala'zs Varga, Ericsson	Results of Osaka meeting
04	April 2013	Bala'zs Varga, Ericsson	Results of San Antonio meeting, added contributions: 2013.205.01, 2013.206.01
05	April 2013	David Sinicrope, Ericsson	Results of San Antonio meeting, approved, one minor change in section 4.8.4. see bbf2013.438.00 minutes for details.
06	June 2013	Bala'zs Varga, Ericsson	Results of Nanjing meeting, changes according to the minutes 2013.672.0x and added contribution: 2013.627.01
07	June 2013	Bala'zs Varga, Ericsson	Straw Ballot version

Comments or questions about this Broadband Forum Working Text should be directed to info@broadband-forum.org.

Editor	Balázs Varga	Ericsson	balazs.a.varga@ericsson.com
IP/MPLS&Core WG Chairs	David Sinicrope	Ericsson	david.sinicrope@ericsson.com
	Drew Rexrode II	Verizon	charles.a.rexrode@verizon.com

 © The Broadband Forum. All rights reserved

TABLE OF CONTENTS

NO TABLE OF FIGURES ENTRIES FOUND..... ERROR! BOOKMARK NOT DEFINED.

EXECUTIVE SUMMARY 6

1 PURPOSE AND SCOPE 7

1.1 PURPOSE 7
1.2 SCOPE 7

2 REFERENCES AND TERMINOLOGY 8

2.1 CONVENTIONS 8
2.2 REFERENCES 8
2.3 DEFINITIONS 9
2.4 ABBREVIATIONS 10

3 CHANGES / UPDATES IN TR-221 13

3.1 MPLS CONNECTIVITY CHECK, CONNECTIVITY VERIFICATION, REMOTE DEFECT INDICATION 13
3.2 VPLS MULTI-HOMING 13
3.3 L2VPN MULTICAST 13
3.4 OAM – ETHERNET/PW INTERWORKING 14
3.5 VPWS WITH BGP SIGNALING AND AUTO-DISCOVERY 14
3.6 HETNET (HETEROGENEOUS NETWORKS AS AN EVOLUTION BASED ON TR-221) 15
3.6.1 HetNet scenarios 15
3.6.2 Macro Sites in HetNet 16
3.6.3 Small Cells in HetNet 16
3.7 PW REDUNDANCY 18
3.7.1 PW redundancy scenarios 18
3.7.2 PW redundancy scenario: single-homed CEs 19
3.7.3 PW redundancy scenario: single and multi-homed CEs 20
3.7.4 PW redundancy scenario: Multi-homed CEs 21

APPENDIX A: USE CASES FOR MPLS AND ETHERNET OAM INTERWORKING 22

A.1 USE-CASE-1 22

A.2 USE-CASE-2 22

APPENDIX B: PW REDUNDANCY USE-CASES 24

B.1 SINGLE TECHNOLOGY (MPLS) BASED MBH NETWORK (CSG ACTS AS PE NODE) 24

B.2 MULTI TECHNOLOGY BASED DOMAIN (CSG IS NOT A PE NODE) 24

 © The Broadband Forum. All rights reserved

List of Figures

Figure 1 – Increase capacity & coverage for better mobile end user experience 15
Figure 2 – Coordination (No / Loose / Tight)..... 16
Figure 3 – Small Cell aggregation node 17
Figure 4 – Extension from existing Macro base station 18
Figure 5 – 2 Single-homed CEs connected with PW redundancy..... 20
Figure 6 – Single and multi-homed CEs interconnected with PW redundancy 20
Figure 7 – Multi-homed CEs interconnected with PW redundancy..... 21
Figure 8 – OAM-IWK used during Multi-homing (CSG is a PE node)..... 23
Figure 9 – OAM-IWK used during Multi-homing (CSG is NOT a PE node)..... 23
Figure 10 – OAM Single technology based MBH network (CSG acting as PE node) 24
Figure 11 – Multi technology based MBH network (non-redundant Edge Node) 25
Figure 12 – Multi technology based MBH network (redundant Edge Node)..... 25
Figure 13 – Multi technology based MBH network (Redundant Edge Node + Redundant MASG) 26

List of Tables

No table of figures entries found.

 © The Broadband Forum. All rights reserved

Executive Summary

<To be added>

© The Broadband Forum. All rights reserved

1 Purpose and Scope

1.1 Purpose

TR-221 addressed MBH and 3GPP releases up through Rel.10. This amendment is applicable to address backhaul up through 3GPP Rel.11 and beyond. For Small Cell architectures however this document addresses backhaul up to Rel.11. Additionally it deals with MPLS enhancements from IETF, and NGMN requirements.

1.2 Scope

The amendment will address issues and features that were not included in the original TR-221 and the workgroup intends to add to the TR-221 scope. This work is being done as an amendment, because it is not intended to change the main content of TR-221, but rather add functions.

The items are:

- MPLS Connectivity Check, Connectivity Verification, Remote Defect Indication
- VPLS Multi-homing
- L2VPN Multicast
- OAM – Ethernet/PW Interworking
- BGP VPWS
- HetNet (Heterogeneous Networks as an evolution based on TR-221)
- PW redundancy

The goal is not to expand the scope defined in TR-221 and IP/MPLS Forum.20

These items are considered as the maximum scope of this amendment. Items outside of this scope may be considered as a separate, future work with an independent NPIF.

 © The Broadband Forum. All rights reserved

2 References and Terminology

2.1 Conventions

In this Working Text, several words are used to signify the requirements of the specification. These words are always capitalized. More information can be found be in RFC 2119 [1].

MUST This word, or the term “REQUIRED”, means that the definition is an absolute requirement of the specification.

MUST NOT This phrase means that the definition is an absolute prohibition of the specification.

SHOULD This word, or the adjective “RECOMMENDED”, means that there could exist valid reasons in particular circumstances to ignore this item, but the full implications need to be understood and carefully weighed before choosing a different course.

SHOULD NOT This phrase, or the phrase "NOT RECOMMENDED" means that there could exist valid reasons in particular circumstances when the particular behavior is acceptable or even useful, but the full implications need to be understood and the case carefully weighed before implementing any behavior described with this label.

MAY This word, or the adjective “OPTIONAL”, means that this item is one of an allowed set of alternatives. An implementation that does not include this option MUST be prepared to inter-operate with another implementation that does include the option.

2.2 References

The following references are of relevance to this Working Text. At the time of publication, the editions indicated were valid. All references are subject to revision; users of this Working Text are therefore encouraged to investigate the possibility of applying the most recent edition of the references listed below.
A list of currently valid Broadband Forum Technical Reports is published at www.broadband-forum.org.

Document		Title	Source	Year
[1]	RFC 2119	*Key words for use in RFCs to Indicate Requirement Levels*	IETF	1997
[2]	draft-ietf-pwe3-mpls-eth-	*MPLS and Ethernet OAM Interworking*	IETF	2013

 © The Broadband Forum. All rights reserved

	oam-iwk-07.txt			
[3]	RFC 6870	*Pseudowire Preferential Forwarding Status Bit*	IETF	2013
[4]	RFC 6718	*Pseudowire Redundancy*	IETF	2012
[5]	IP/MPLS Forum 22.0.0	*BGP Auto-Discovery and Signaling for VPWS-based VPN services*	BBF	2012

2.3 Definitions

The following terminology is used throughout this Working Text.

Abis Interface between the BTS and BSC (TNL is TDM)

ATM TNL The Transport Network Layer defined in this document as the transport bearer for 3G ATM traffic.

CSG Cell Site Gateway – Node at the cell site that presents the transport network interface to the Base Station equipment. For purposes of this document this device is an MPLS capable node.

Iub Interface between the NB and RNC (TNL is ATM or IP)

IP TNL The Transport Network Layer defined in this document as the transport bearer for LTE and 3G IP traffic. It should also be noted that there is a possible difference between the TNL and what is transported over MPLS. For example, when carrying the ATM TNL using TDM over MPLS or when carrying IP TNL using Ethernet over MPLS.

MASG Mobile Aggregation Site Gateway - Node at the radio controller, MME or serving gateway site that presents the transport network interface to the mobile equipment. For purposes of this document this device is an MPLS capable node.

S1 interface Interface between the eNB and the MME or S-GW

TDM TNL The Transport Network Layer defined in this document as the transport bearer for 2G TDM traffic.

X2 interface Interface between two neighboring eNBs

 © The Broadband Forum. All rights reserved

2.4 Abbreviations

This Working Text uses the following abbreviations:

3GPP	3rd Generation Partnership Project
BGP	Border Gateway Protocol
BS	Base Station
CE	Customer Edge
CSG	Cell Site Gateway
EN	Edge Node
H-VPLS	Hierarchal Virtual Private LAN Service
IETF	Internet Engineering Task Force
IP	Internet Protocol
ITU-T	International Telecommunication Union - Telecom
L2VPN	Layer 2 Virtual Private Network
L3VPN	Layer 3 Virtual Private Network
LDP	Label Distribution Protocol
LER	Label Edge Router
LSP	Label Switched Path
LSR	Label Switch Router
MASG	Mobile Aggregation Site Gateway
MEF	Metro Ethernet Forum
MPLS	Multi Protocol Label Switching
MS-PW	Multi-Segment Pseudowire
OAM	Operations, Administration and Management
P	Provider
PE	Provider Edge
PW	Pseudowire
RAN	Radio Access Network
RFC	Request for Comments
RSVP-TE	Resource ReSerVation Protocol
S-PE	Switching Provider Edge Router
SS-PW	Single-Segment Pseudowire
TE	Traffic Engineering
T-LDP	Targeted Label Distribution Protocol
TLV	Type/Length/Value

© The Broadband Forum. All rights reserved

TR	Technical Report
VPLS	Virtual Private LAN Service
VPN	Virtual Private Network
VPWS	Virtual Private Wire Service

© The Broadband Forum. All rights reserved

201

© The Broadband Forum. All rights reserved

3 Changes / Updates in TR-221

The topics addressed by this amendment are described in the following sections. Reference is given where and how to change / update TR-221 text.

3.1 MPLS Connectivity Check, Connectivity Verification, Remote Defect Indication

<placeholder for contributions' text>

Editor's note: Nanjing - There was some contribution in WT-224 and the WG was not comfortable removing the section yet. The WG agreed to hold this section through straw ballot. If still not text then remove section.

3.2 VPLS Multi-homing

<placeholder for contributions' text>

Editor's note: Nanjing - Hold until we hear contributions from this meeting.

Editor's note 2: VPLS Multi-homing text previously contributed and removed from TR-221. Prepare contribution for Osaka.

- Draft text to be done such that it can be pulled out if the draft (Draft-ietf-l2vpn-vpls-multihoming-05) is not ready for publication in the IETF.
- Text will be similar to WT-224. If draft not ready will still rely on text in 221.
- Reference will not be ready mid 2013, reconsider during straw ballot phase.

3.3 L2VPN Multicast

<placeholder for contributions' text>

Editor's note: L2VPN Multicast – what do we want from this? AND what's ready from IETF?

- video distribution use case (MBMS)? Useful but need phase sync not just frequency.
- What use cases do we want to cover and what are the multicast requirements?

Editor's note2:

- No strong requirements from operators in the meeting for multicast in general. Might be applicable to 224 in support of multiservice. (e.g., IPTV service).
- Based on monitoring of IETF L2VPN drafts, the solutions needed for this would not be ready for planned publication.

 © The Broadband Forum. All rights reserved

3.4 OAM – Ethernet/PW Interworking

Editor's note: Resolve draft-… etc.

This text replaces section 8.3.1.3.1 in TR-221.

For interworking of the two technology domains (i.e. Ethernet and MPLS) for OAM-IWK the following requirements apply:

[R-1] The PE MUST support transparent transfer of native service OAM indications over the PW as defined in draft-ietf-pwe3-mpls-eth-oam-iwk-07.txt [2] Section 1

[R-2] Transport related defects SHOULD be handled as follows:

- AC failure :
  - AC receive defect state entry and exit criteria – as per draft-ietf-pwe3-mpls-eth-oam-iwk-07.txt [2] Section 4.1
  - AC transmit defect state Entry/exit criteria – as per draft-ietf-pwe3-mpls-eth-oam-iwk-07.txt [2] Section 4.2
  - AC receive defect Consequence action – as per draft-ietf-pwe3-mpls-eth-oam-iwk-07.txt [2] Section 5.5 and 5.6.
  - AC transmit defect Consequence action – as per draft-ietf-pwe3-mpls-eth-oam-iwk-07.txt [2] Section 5.7 and 5.8
- PW failure :
  - PW receive defect entry/exit procedure – as per draft-ietf-pwe3-mpls-eth-oam-iwk-07.txt [2] Section 5.1 and 5.2
  - PW transmit defect entry/exit procedure – as per draft-ietf-pwe3-mpls-eth-oam-iwk-07.txt [2] Section 5.3 and 5.4

Note: Motivation for OAM interworking in the context of Mobile Backhaul can be found in Annex-A.

3.5 VPWS with BGP Signaling and Auto-Discovery

Add new requirements in section 5.1.3/TR-221 PW Signaling after R11.

If an implementation supports IP-MPLSF 22.0.0 [5] "BGP auto-discovery and signaling for VPWS-based VPN services", which provides specification for setup of VPWS pseudowires the following requirements apply.

[R-3] PE routers MUST support one or more of the following encapsulation type values from IP-MPLSF 22.0.0 [5]

 © The Broadband Forum. All rights reserved

- For Ethernet over MPLS (RFC 4448) the Encaps Type is 4 or 5 as per IP-MPLSF 22.0.0.
- For TDM TNL (RFC 4553 or RFC 5086) the Encaps Type is per IP-MPLSF 22.0.0

3.6 HetNet (Heterogeneous Networks as an evolution based on TR-221)

This text is to be added as new section after section 9. in TR-221.

Heterogeneous networks (HetNet) are about providing a seamless broadband user experience for mobile customers independent from their location (on the move, in the office or at home). HetNet implementation has to provide a seamless network evolution, adding capacity and coverage in a smooth, cost effective way. To achieve these goals the right mix of HetNet scenarios and their backhaul solutions must be provided.

Note: The combination of small and macro cells is referred as a “Heterogeneous Network”.

3.6.1 HetNet scenarios

Main motivation for using HetNets are related to recent mobile end user experience challenges are to increase overall cell site performance, cell edge data rates and indoor data rates. In order to increase capacity & coverage the following solutions – also depicted in Figure X. – can be used:

1. ”Super-macro” – advanced antennas, spectrum aggregation
2. Macro densification
3. Small cells – Micro & Pico

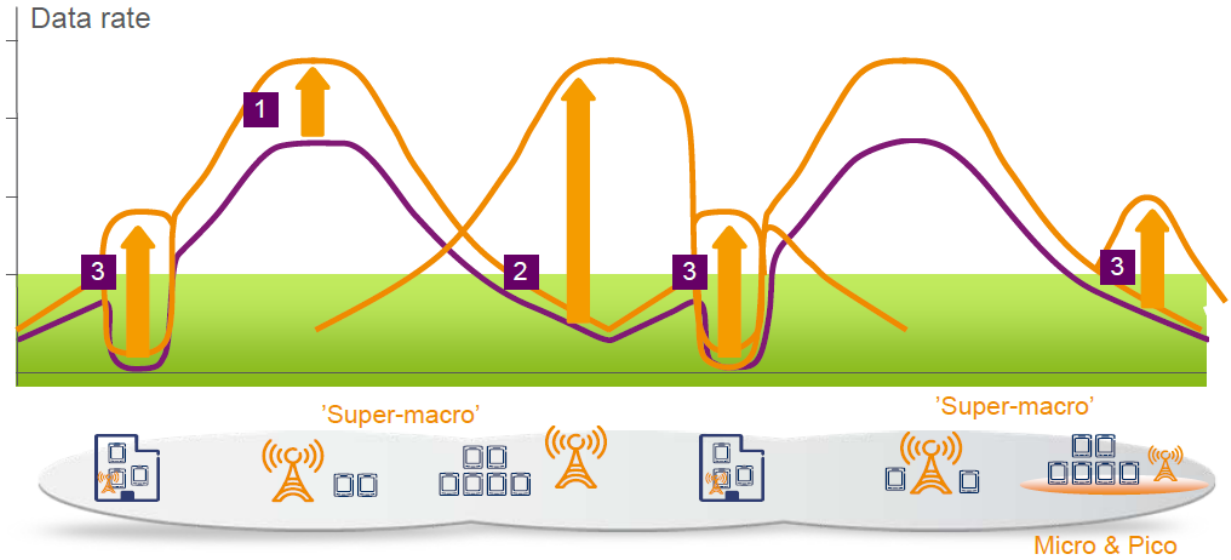

Figure 1 – Increase capacity & coverage for better mobile end user experience

Figure from 2012.1156.02

© The Broadband Forum. All rights reserved

3.6.2 Macro Sites in HetNet

These HetNet scenarios have different impact on the Backhaul network. Improving existing macro sites and densifying macro sites impacts required capacity and number of PoPs of the Backhaul Network, but do not affect the basic architecture of it. These two methods are used by operators when possible especially when hotspots are unknown.

Macro sites part of the HetNet network do not require any changes of TR-221 reference architecture.

3.6.3 Small Cells in HetNet

Main motivations for deploying Small Cells (Micros or Picos) are: when Macros are not possible or when Hotspots are well known. The impact of Small Cells depends significantly on the coordination:

- No coordination
  Example: uncoordinated deployment with femtos in a macro network
- Loose coordination
  Example: Adaptive resource partitioning of pico RBSs in a macro network
- Tight coordination
  Example: Tight Coordinated scheduling (on air interface) of uplink and downlink

Note: Femto is out-of-scope in TR-221 Amendment-1.

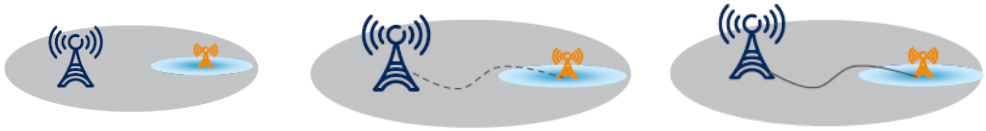

Figure 2 – Coordination (No / Loose / Tight)
Figure from 2012.1156.02

Note: names are used according to 3GPP definition: Wide Area Base Stations, (popular name macro-RBS), Medium Range Base Stations, (popular name micro-RBS), Local Area Base Stations, (popular name pico-RBS) and Home Base Stations, (popular name femto RBS).

Many of the backhaul requirements for small cells are the same as those for macro sites. Small cell base station nodes use the same logical interfaces (S1 and X2 or Iub or Iuh) as a (e)NodeB, Home(e)NB, as defined in 3GPP TS 36.300 Release 11. Small Cells do not require new connectivity topologies:

- WCDMA: Hub and Spoke communication (IuB)
- LTE: Partially meshed communication (S1 and X2)

Note: IP connectivity requirements for LTE networks are described in Appendix D of TR-221.

There are 3 main TR-221 backhaul use-cases of Small Cells

1. Dedicated backhaul per small cell
2. Dedicated backhaul for a group of small cells

 © The Broadband Forum. All rights reserved

3. Extension from existing Macro base station

For the first variant CSG functionality of the Small Cell node is expected to be a non-MPLS node as it would significantly increase the number of MPLS nodes in the Backhaul Network. Scenario a, and b, of TR-221 (Figure 1.) apply.

For the second variant adding a small cell aggregation node (AgN) for backhaul may be beneficial. This AgN may be an MPLS node and can be treated as a CSG from TR-221 reference architecture perspective. All scenarios of TR-221 (Figure 1.) apply.

Editors note: additional requirements to be discussed / identified (if any)

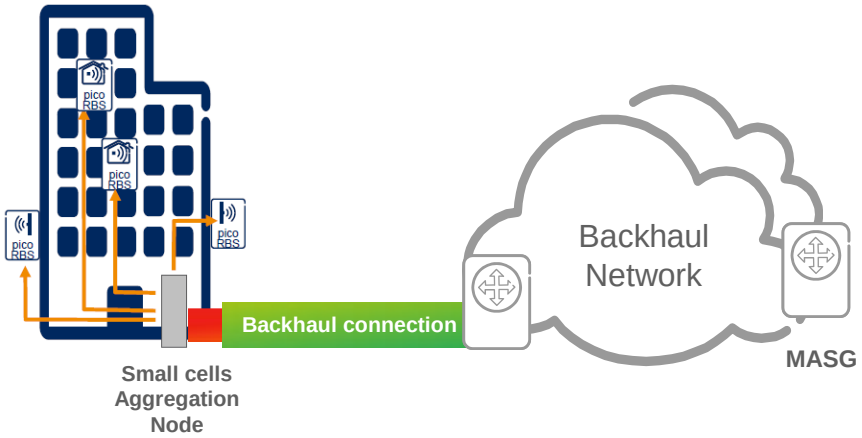

Figure 3 – Small Cell aggregation node

Figure from 2012.1156.02

[R-4] If the AgN is an MPLS node it SHOULD fulfill CSG related requirements of TR-221.

For the third variant a “local access network” is expected between the macro and the small cells. For operators with existing backhaul and radio network, a quite natural choice is to connect the small cell nodes to the macro cell site. Such a local network is out-of-scope for TR-221, therefore no new requirements are discussed here. A CSG is used on the macro site for which no additional requirements applies.

 © The Broadband Forum. All rights reserved

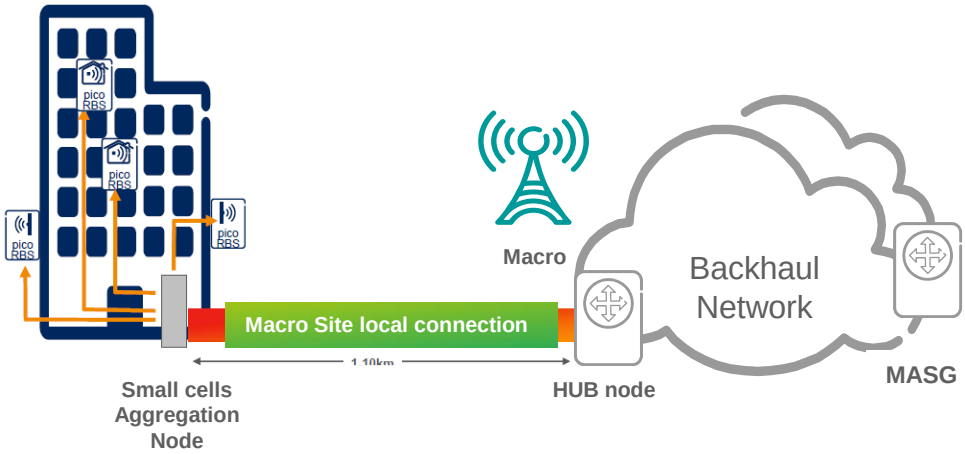

Figure 4 – Extension from existing Macro base station

Figure from 2012.1156.02

Editors note: Connection between AgN and Macro Hub site can be both (i) leased or (ii) owned.

Note: Performance Objectives and Synchronization Requirements for small cells are out-of-scope for this document. At the time of writing this document there is work in progress in the MEF.

3.7 PW Redundancy

Text below replaces the text of section 5.3.4 in TR-221. Section 5.3.4.1 is kept and is not changed.

This section describes PW resiliency and resiliency requirements.

[R-5] A PE SHOULD support PW protection.

In the following, a CE that is connected to a single PE via one AC is referred as a “Single-homed CE”, and a CE that is connected to more than one PE (each AC to a different PE) is referred as a “Multi-homed CE”.

Note: The CE may be a virtual entity comprised of more than one physical node.

Note: The AC that is connected to a PE might itself be protected using protection native to the AC technology (e.g. LAG for Ethernet). From the PW’s point of view this is a single AC.

3.7.1 PW redundancy scenarios

This section describes requirements to ensure resiliency for L2-VPN service (VPWS) - provided by the MPLS domain of the MBH network – using PW redundancy in the access and aggregation part of the network.

The PW is setup from the PE nodes, using LDP signaling (RFC4447) or static methods with status signaling (RFC6478).

 © The Broadband Forum. All rights reserved

Note: This section covers PW redundancy only inside the MPLS domain and does not cover complete end-to-end redundancy scenarios. Inter-domain related aspects of PW redundancy are out of scope.
Note: In the PW redundancy section, mechanisms that rely on more than one active path between the PE nodes, e.g., 1+1 protection switching, are also out of the scope.

The following network scenarios are considered:

- MPLS network: provides L2 VPN service (VPWS)
    - CSG is not part of the MPLS domain (case a, and b, as per TR-221 reference architecture)
    - CSG is part of the MPLS domain acting as PE node (case c, d, e, and f, as per TR-221 reference architecture)
- MASG node: has Ethernet connectivity towards RAN Control nodes
- MASG node(s): Redundant or Non-redundant (i.e. multiple or single MASG provides connectivity for RAN Control nodes)
- Edge Node (CSG or first PE) node(s): Redundant or Non-redundant (i.e. multiple Edge Nodes or single CSG/Edge Node provides connectivity for BS)

PW redundancy scenarios in this chapter assume usage of SS-PW. Similar mechanisms apply for MS-PW scenarios, where a set of redundant PWs is configured between T-PE nodes. PE/T-PE nodes indicate the preferred PW to be used for forwarding via the Preferential Forwarding status bit as per RFC6870.
Note: Protection for a PW segment can be provided by the PSN layer, e.g. FRR. Interaction between the PW redundancy mechanisms and these PSN restoration functions below and/or in the MPLS layer are out-of-scope. Such PSN restoration mechanisms are assumed to react rapidly enough to avoid the triggering of PW redundancy.

From PW redundancy related requirements perspective these MBH specific network scenarios differs depending on the connection method (single-homed or multi-homed) of the CEs interconnected using PW redundancy:

- Single-homed CEs
- Single and multi-homed CE
- Multi-homed CE

3.7.2 PW redundancy scenario: single-homed CEs

In such scenarios two PWs are configured between two PE nodes (e.g. PW1: PE1-PE2 and PW2: PE1-PE2). As the PWs are terminated on the same PE nodes, such a scenario can provide redundancy if the PWs are differently “routed” over the MPLS network. One of the PE nodes (e.g. PE1) acts as a Master Node for selecting the active PW.

 © The Broadband Forum. All rights reserved

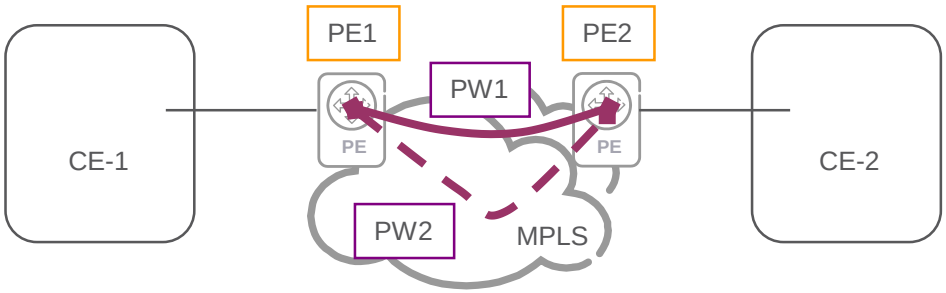

Figure 5 – 2 Single-homed CEs connected with PW redundancy
Figure from 2013.206.02

[R-1] The PE SHOULD support Master/Slave Mode as per RFC 6870 [3] Section 5.2.

3.7.3 PW redundancy scenario: single and multi-homed CEs

Such a scenario protects the emulated service against a failure of one of the PEs (PE2 or PE3) or ACs terminated on the multi-homed MASGs. The two PWs are configured between the PE nodes (e.g. PW1: PE1-PE2 and PW2: PE1-PE3). The PE node on single sided connection which terminates both PWs (PE1) acts as a Master Node for selecting the active PW.

PW redundancy determines which PW to make active based on its preference and the forwarding state of the ACs so that only one path is available between CE-1 to CE-2. The PE connected to active PW on multi-homing side will act as “forwarder” to/from CE.2. Other PE on the multi-home side will block the AC for forwarding and receiving.

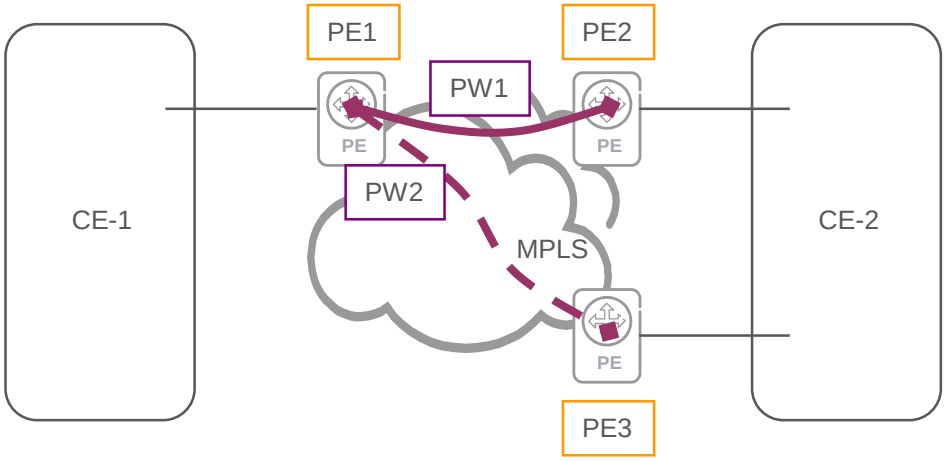

Figure 6 – Single and multi-homed CEs interconnected with PW redundancy
Figure from 2012.558.02

Based on AC status signaling the Master node is able to select which PW to use for forwarding traffic. Depending on the technology used in the MPLS domain AC signaling methods differs. In case of LDP RFC4447 applies and in case of static PW RFC6478.

 © The Broadband Forum. All rights reserved

[R-2] The PE SHOULD support Master/Slave Mode as per RFC 6870 [3] Section 5.2.

3.7.4 PW redundancy scenario: Multi-homed CEs

In such scenarios 2-2 PE nodes are used to provide connectivity to the MPLS domain. A partial mesh of PWs is configured between the PE nodes (e.g. PW1: PE1-PE3, PW2: PE1-PE4, PW3: PE2-PE3 and PW4: PE2-PE4).

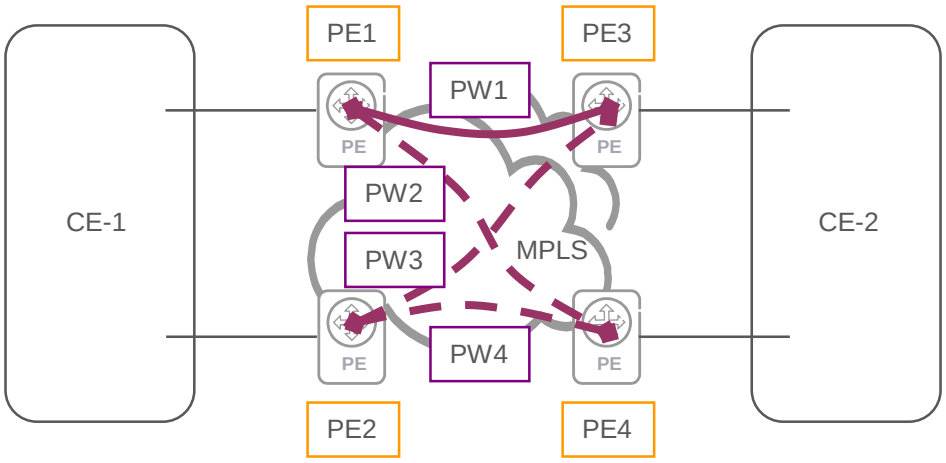

Figure 7 – Multi-homed CEs interconnected with PW redundancy

Figure from 2012.558.02

This scenario is similar to the "VPLS Bridge Module Model" described in RFC 6870 [3] Section 3.2.6.

Note: A dual-homing control protocol is out-of-scope in RCF6870, but it is needed for the selection of the single active PW. Such a scenario is left for further study.

© The Broadband Forum. All rights reserved

The following appendixes are to be added after Appendix F in TR-221.

Appendix A: Use cases for MPLS and Ethernet OAM Interworking

Transport networks may be built from network segments using different technologies and forwarding paradigm. OAM tools and protocols are technology dependant therefore the handover between the Ethernet and MPLS network segments require OAM related interworking functionality (OAM-IWK). That OAM-IWK can ensure that OAM functions can provide end to end information. This section focus on Ethernet and MPLS OAM interworking for emulated Ethernet service and propagation of connectivity status information over the handover points.

Use-cases of OAM-IWK in Mobile Backhaul networks have the following characteristics:

- MPLS network: provides L2 VPN service (VPWS)
- MASG node: has Ethernet connectivity towards RAN Control nodes
- MASG node(s): Redundant or Non-redundant (i.e. multiple or single MASG provides connectivity for RAN Control nodes)
- Edge Node (CSG or first PE) node(s): Redundant or Non-redundant (i.e. multiple Edge Node or single CSG/Edge Node provides connectivity for BS)

Motivations for using OAM-IWK can be the following use-cases:

1. Connectivity check in the MBH network for O&M purposes
2. Multi-homing: Forwarding Path Selection based on connectivity check results

A.1 Use-case-1

Implementing the OAM-IWK function allows for the operators to make end-to-end connectivity check in their MBH network (e.g. between CSG and MASG). This information can be used for various O&M purposes (e.g. SLA verification, troubleshooting, etc.).

A.2 Use-case-2

In multi-homing scenarios, when MASG and/or Edge Node are redundant the reach-ability information provided by the OAM-IWK can be used for selecting the forwarding path (i.e. PW) over the MPLS domain. When ACs are Ethernet based, than mapping between OAM status information of the MPLS and Ethernet domain have to be mapped in order to ensure that OAM works end2end.

For transport over the MPLS domain MASG and Edge Nodes can involve the information provided by the OAM-IWK about end-to-end (e.g. between CSG and MASG) reach-ability.

Use-case-2 scenarios:

A. CSG = PE node: usage of OAM-IWF provided information depends on network setup. Using MPLS OAM can be sufficient to signal the ACs' statuses between CSG and MASG to influence PW selection.

 © The Broadband Forum. All rights reserved

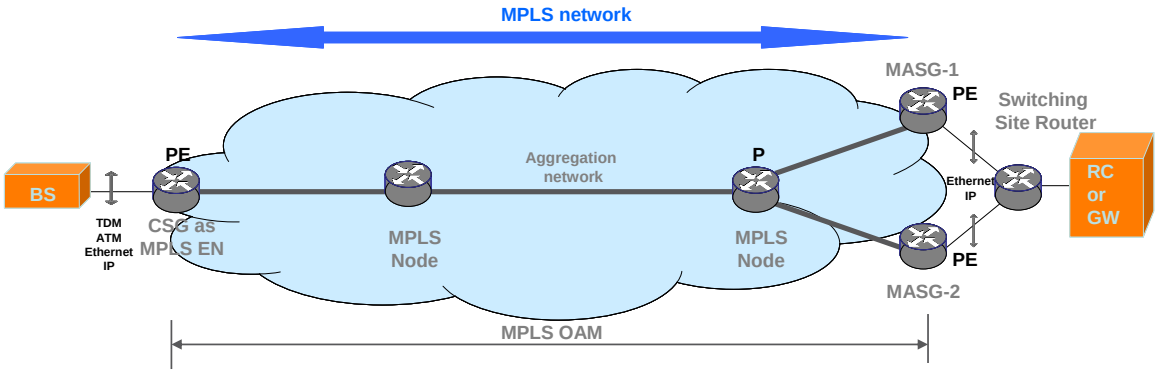

Figure 8 – OAM-IWK used during Multi-homing (CSG is a PE node)

Figure from 2012.556.02

For signaling AC status RFC 6478 (Pseudowire Status for Static Pseudowires) is applicable for static pseudowires and RFC 4447 (Pseudowire Setup and Maintenance Using the Label Distribution Protocol (LDP)) may be applicable in case of dynamic control plane.

B. CSG ≠ PE node: CSG is connected to the MPLS network via a L2 segment. Therefore the information provided by the OAM-IWK function can be essential to select an appropriate PW over the MPLS domain to avoid connectivity problems (e.g. black-holing, etc.).

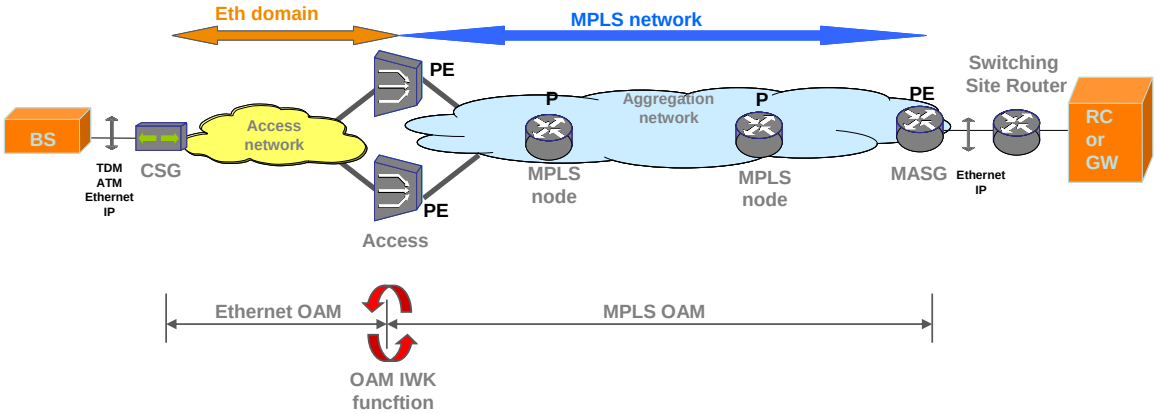

Figure 9 – OAM-IWK used during Multi-homing (CSG is NOT a PE node)

Figure from 2012.556.02

In this use-case scenario the functions defined in Section 4 and Section 5 of draft-ietf-pwe3-mpls-eth-oam-iwk-07.txt [2] are applicable.

© The Broadband Forum. All rights reserved

Appendix B: PW redundancy use-cases

The cases explained show PW redundancy in a fully MPLS and a partially MPLS case (i.e. TR 221 reference architecture cases C and A).

B.1 Single technology (MPLS) based MBH network (CSG acts as PE node)

Considering a single technology MBH network the non-redundant CSG acts as a PE node. Redundancy can be provided only for scenarios with redundant MASG nodes.

In such a VPWS based architecture PWs are set-up using the active/standby PW concept, which ensures that only a single active forwarding path exists between the CSG and the MASG nodes. The CSG acts as a Master Node. The status of Attachment Circuit (AC) links must be tracked in order to control PW switch-over in possible failure scenarios.

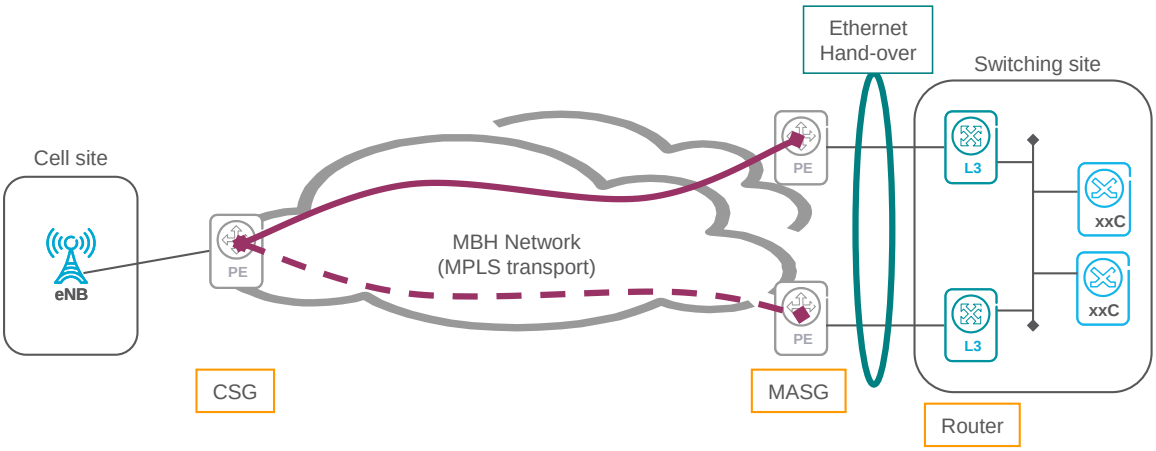

Figure 10 – OAM Single technology based MBH network (CSG acting as PE node)

Figure from 2012.558.02

B.2 Multi technology based domain (CSG is not a PE node)

This section is focusing on the network scenario, where the MBH network is built based on two domains:

- L2 domain: provides native Layer-2 connectivity between CSG and the Edge Nodes.
- MPLS domain: interconnects the L2 domain(s) and the Switching Site by using redundant PWs inside the domain.

Non-redundant Edge Node + Redundant MASG

For single Edge Node scenarios the same considerations apply as described in the single technology based MBH networks section. The Edge Node acts as Master Node.

 © The Broadband Forum. All rights reserved

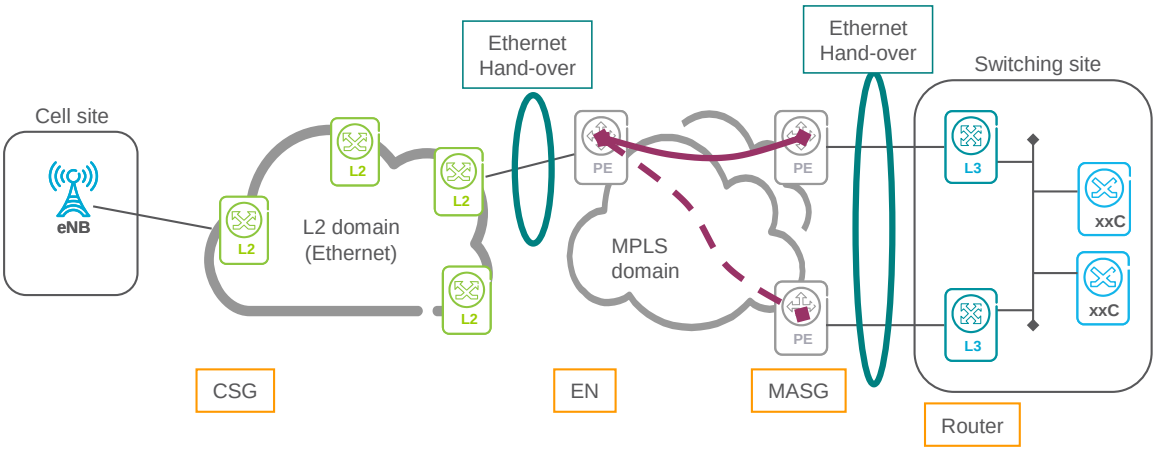

Figure 11 – Multi technology based MBH network (non-redundant Edge Node)
Figure from 2012.558.02

Redundant Edge Node + Non-redundant MASG

The set-up of PWs in the MPLS networks depends on the network scenario. If only a single MASG is present than Master/Slave Mode can provide the required PW redundancy function, where the MASG acts as Master Node.

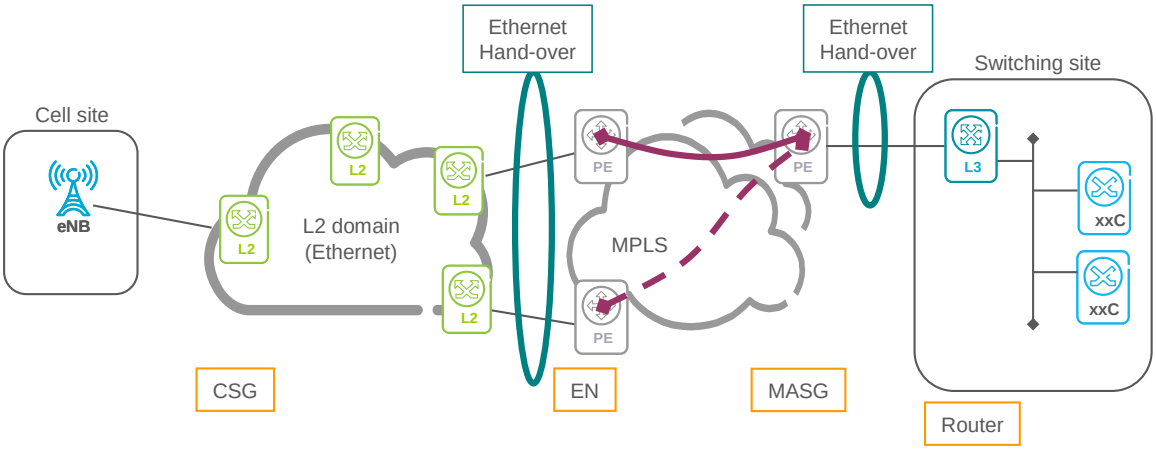

Figure 12 – Multi technology based MBH network (redundant Edge Node)
Figure from 2012.558.02

Redundant Edge Node + Redundant MASG

If both the Edge Nodes and the MASGs are redundant then transport redundancy can be provided by the PW redundancy concept. The MPLS domain provides interconnection of the L2 domains and the Switching Site using a single active PW. Partially mesh of PWs means, that four PWs are used with endpoints at Edge nodes and MASG nodes. No PWs are needed between the pair of Edge nodes and the pair of MASG nodes.

 © The Broadband Forum. All rights reserved

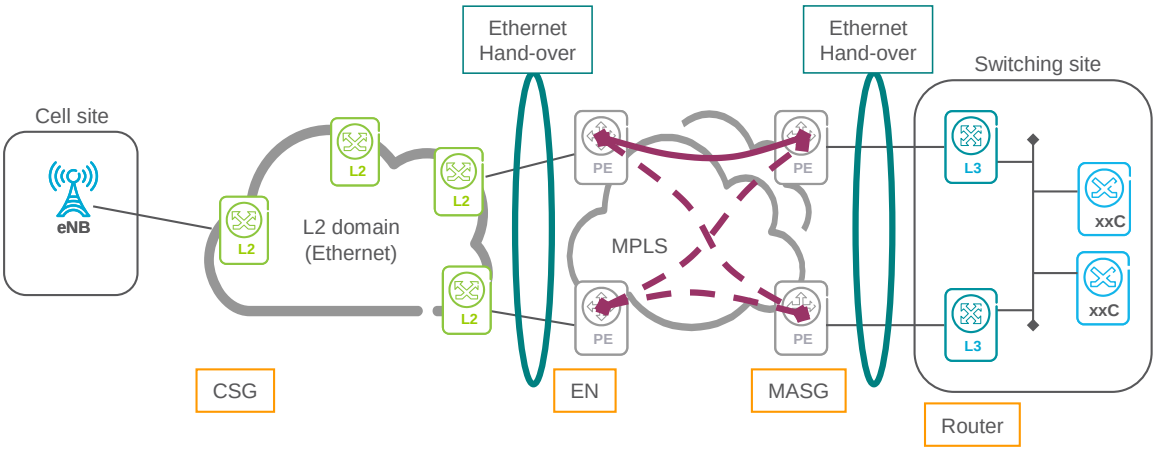

Figure 13 – Multi technology based MBH network (Redundant Edge Node + Redundant MASG)

Figure from 2012.558.02

Selection of the active PW is based Independent mode with primary/secondary concept.

End of Broadband Forum Working Text WT-221a1

© The Broadband Forum. All rights reserved