3GPP TSG RAN Meeting #102
Edinburgh, GB, December 11-15, 2023
Agenda item: 9.1.1.2
RP-233418

# Views on Rel-19 MIMO Evolution

CMCC

# Enhancement for asymmetric DL and UL deployment scenario

## Scenario

- **HetNet deployment:** In our network, indoor micro site and outdoor macro site are deployed at same frequency while with different cell ID (Fig.1).
- **Interference from outdoor macro site to indoor micro site:** The Tx power of outdoor macro site is larger than indoor micro site, which may have >10dB DL-Tx-power gaps. This causes severe interference towards indoor micro site, especially for the UEs by the window. The data rate loss of indoor UEs has been observed in current network deployment.
- **Asymmetric coverage in zone 2:** As shown in Fig.2, due to the >10dB DL-Tx-power gaps between outdoor macro site and indoor micro site, asymmetric coverage is observed in HetNet deployment.
  - ✓ In zone 1, outdoor macro site has better coverage for both DL and UL, UEs are served by outdoor macro site.
  - ✓ In zone 3, indoor micro site has better coverage for both DL and UL, UEs are served by indoor micro site.
  - × In zone 2, asymmetric coverage is observed, outdoor macro site has better coverage for DL, while indoor micro site has better coverage for UL. In this case, if the UE is served by indoor micro site, then outdoor macro site will cause severe interference on DL, if the UE is served by outdoor macro site, then UL performance cannot be ensured.

***Observation 1: In HetNet deployment, severe interference from outdoor macro site to indoor micro site is observed due to >10dB DL-Tx-power gaps.***

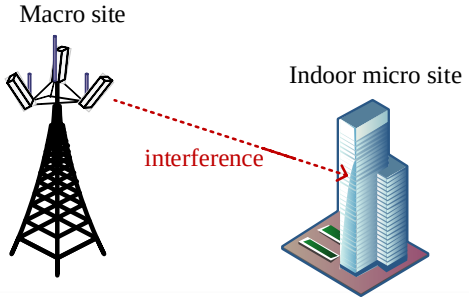


Fig.1 HetNet deployment

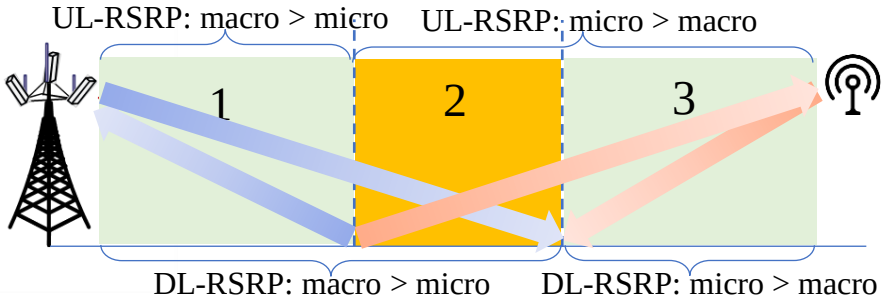


Fig.2 Asymmetric coverage in HetNet deployment

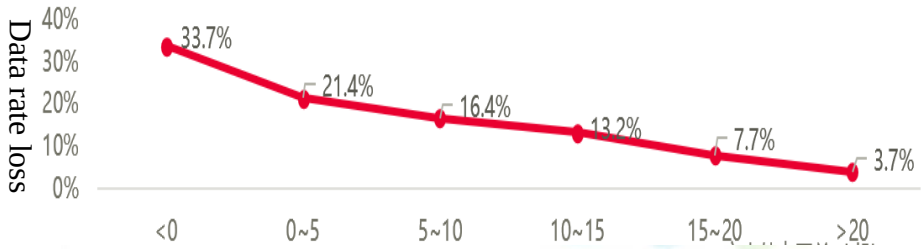


Fig.3 Power level difference observed by indoor UE(dB)

# Enhancement for asymmetric DL and UL deployment scenario

## Potential solutions

- **Asymmetric DL and UL:** In zone 2 as shown in Fig.2, outdoor macro site has better coverage for DL, then outdoor macro site can be used for DL transmission, while indoor micro site has better coverage for UL, then indoor micro site can be used for UL reception. The asymmetric DL and UL transmission scheme eliminates the interference from outdoor macro site to indoor micro site and ensures the UL performance.
- **Asymmetric DL and UL framework under inter-cell scenario:**
  - ① Outdoor macro site is the serving cell for UE, and transmits DL signal, such as SSB and CSI-RS.
  - ② Outdoor macro site transmits DL channel, such as PDCCH and PDSCH, which QCLed to SSB or CSI-RS transmitted from outdoor macro site.
  - ③ Indoor micro site transmits SSB, and the SSB is configured through *SSB-MTC-additionalPCI* for measurement.
  - ④ Indoor micro site transmits DL RS, such as CSI-RS, and the CSI-RS is QCLed to SSB with *additionalPCI,* UE transmits PUCCH and PUSCH to indoor micro site, where the PUCCH and PUSCH are QCLed to SSB or CSI-RS transmitted from indoor micro site.
  - ⑤ The PL-RS is configured with SSB or CSI-RS transmitted from indoor micro site.

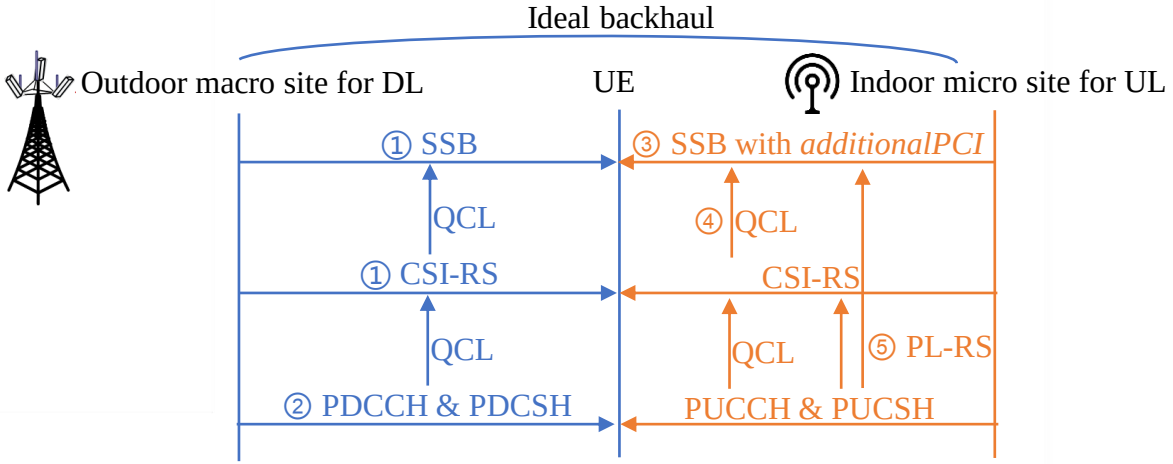

# Enhancement for asymmetric DL and UL deployment scenario

## Potential solutions

- **Asymmetric DL and UL framework under inter-cell scenario with minor spec impact:**
  - ①② are R15 framework without additional spec impact.
  - ③ has been supported in Rel-16, which can be used in asymmetric DL and UL transmission without additional spec impact.
  - The signaling design of ④ has been supported in M-DCI based M-TRP inter-cell operation in Rel-16, while UE indicating support of this feature shall also indicate the support of M-DCI based M-TRP. In our network, M-TRP has not been widely deployment, and UE support of M-TRP is not typical product in current market. UE support of M-DCI based M-TRP shall support DL reception and UL transmission for both TRPs, while UE support of asymmetric DL and UL transmission receives DL channel from one TRP and transmits UL channel to another TRP based on the TCI state and PL-RS indication, UE only needs to measure SSB with *additionalPCI*, which has smaller complexity compared to M-DCI based M-TRP. So, ③ can be used in asymmetric DL and UL transmission with minor spec impact.
  - ⑤ has been supported under unified TCI state framework in Rel-16, which can be used in asymmetric DL and UL transmission without additional spec impact.
  - Additionally, outdoor macro site and indoor micro site should have ideal backhaul to support dynamic scheduling.
- ***Proposal 1: Specify enhancement for asymmetric DL and UL framework under inter-cell scenario.***

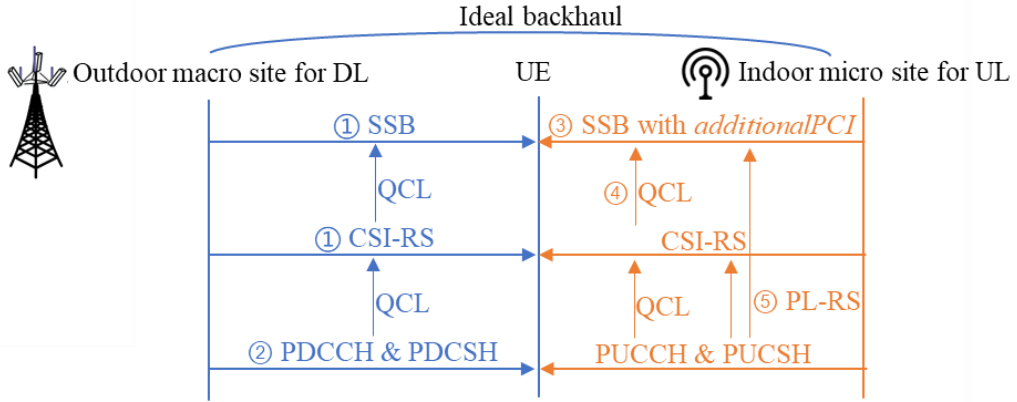

# Enhancement on CJT transmission

## CJT enhancement

**Motivation:**

- CJT in Rel-18 considers only ideal time/frequency synchronization among TRPs, which is not realizable for deployment. It restricts that the TRPs should be under ideal backhaul and could not enable large area cooperation.
- For CJT transmission, it is difficult to implement calibration across different TRPs with non-ideal backhaul.

***Proposal 2: Specify UE reporting enhancement for CJT deployments under non-ideal synchronization and backhaul***

- ***Inter-TRP time misalignment and frequency/phase offset measurement and reporting***

# THANK YOU !