MAC DESIGN FOR GERAN'00

1. INTRODUCTION

As agreed in SMG2#34, [1] the MAC layer for GERAN will support two different modes, *dedicated* and *shared* where a single user or multiple users respectively are multiplexed on a single physical subchannel. The dedicated MAC mode is mainly intended for optimized bearer such as e.g optimized voice which reuses the TCH, and multiple parallel QoS traffics for one user whereas the shared mode is intended for multiplexing of interactive, background bearers only, between different users.

This contribution identical to [8] updated from SMG2#36 version, discusses what can be kept from Rel'99 and what needs to be included in Rel'00.

2. (E)GPRS MAC LAYER AND BEYOND

2.1 Identity: TLLI, TFI, PFI

2.1.1 Temporary Logical Link Identity: TLLI

TLLI assignment is controlled by GMM (GPRS Mobility Management). See [7][6]. It is not carried in LLC frames, and is not part of LLC.

The Temporary Logical Link Identity (TLLI) is associated with the GPRS subscriber. TLLI is defined in GSM 03.03. It is used for addressing on resources used for GPRS. The TLLI to use is built by the MS or by the SGSN either on the basis of the P-TMSI (local or foreign TLLI), or directly (random or auxiliary TLLI).

The TLLI is carried in RLC/MAC blocks carrying data during contention resolution phase only but is always included in all UL RLC/MAC control blocks when TFI is not available, to identify the originating MS. It may also be used in some DL control blocks.

2.1.2 Temporary Flow Identity: TFI

Information contained herein may be found in [4],

A temporary block flow (TBF) is a physical connection used by the two RR entities to support the unidirectional transfer of LLC PDUs on packet data channels.

Each TBF is assigned a TFI by the network. The TFI value is unique among concurrent TBFs in the same direction on all PDCHs used for the TBF. The same TFI value may be used concurrently for TBFs on other PDCHs in the same direction and for TBFs in opposite direction.

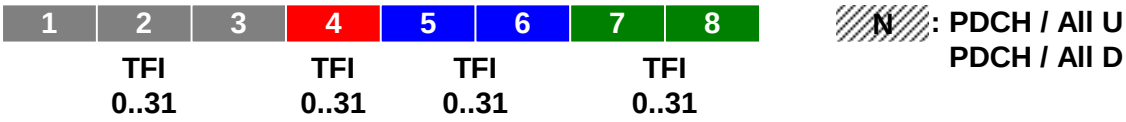

The **Global_TFI** i.e. uplink TFI or downlink TFI, is used to unambiguously identify the MS during packet transfer mode in an UL or DL RLC/MAC control message.

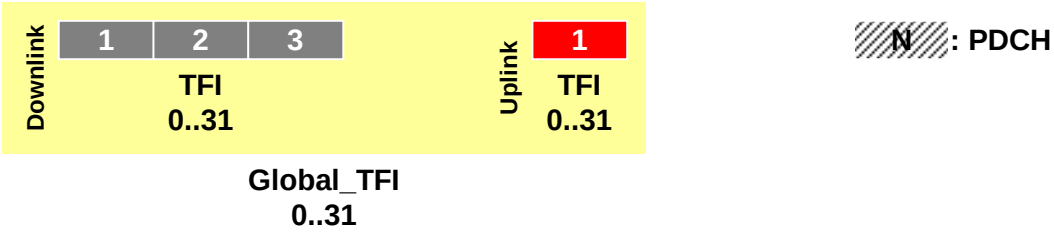

2.1.3 Packet Flow Context

The SGSN can provide a BSS with information related to ongoing user data transmission. The information related to one MS is stored in a BSS context. A BSS context contains a number of BSS packet flow contexts. Each BSS packet flow context is identified by a packet flow identifier (PFI) assigned by the SGSN. A BSS packet flow context is shared by one or more activated PDP contexts with identical or similar negotiated QoS profiles. The data transmission related to PDP contexts that share the same BSS packet flow context constitute one packet flow.

Three packet flows are pre-defined, and identified by three reserved packet flow identifier values. One pre-defined packet flow is used for best-effort service, one is used for SMS, and one is used for signalling. The SGSN can assign the best-effort or SMS packet flow identifier to any PDP context. In the SMS case, the BSS shall handle the packet flow for the PDP context with the same QoS that it handles SMS with.

So for one MS, there may be one PFC at a time. Per PFC there can be one or more PDP contexts to which may be assigned only one TBF at a time (There maybe several consecutive TBFs per PDP context). For each MS, there is no concurrent TBFs on one direction.

2.2 Multiplexing

The (E)GPRS MAC layer supports three different MAC modes refering to the type of allocation: fixed, dynamic or extended dynamic.

2.2.1 Downlink

Straightforward.

On the assigned PDCH's, MSs detect blocks intended for them by reading the TFI in each downlink block.

2.2.2 Uplink

The assigned PDCHs are notified to the MS in the PACKET UPLINK ASSIGNMENT message.

2.2.2.1 Fixed Allocation

Fixed allocation is indicated to the MS in PACKET UPLINK ASSIGNMENT message (it is as well indicated in case of reassignment/reconfigure/reallocation).

The PDCH/U may be used by the MS during a given period of time.

For synchronization purpose, restrictions (modulation) apply to DL transmission if GPRSs MS are multiplexed with EGPRS MSs in the UL.

2.2.2.2 Dynamic Allocation

Dynamic Allocation and Extended Dynamic Allocation are controlled by the USF. Initial parameters are sent in assignment message.

Extended Dynamic Allocation is similar to Dynamic Allocation but regards more than one PDCH.

The USF granularity sets the number of RLC/MAC blocks which can be sent on each uplink PDCH: one or four consecutive RLC/MAC blocks.

3. GERAN'00 MAC LAYER

The functions of the MAC layer may be classified according to the MAC mode in use.

The main additions to Rel'99 MAC layer are the possibility for multiple simultaneous TBF per MSs, dedicated physical subchannel and new TBF release procedure.

3.1 Identity

3.1.1 Temporary Logical Link Identity

The TLLI may be reused but would lead to changes to Iu-ps. Therefore, instead the GERAN could allocate own temporary identity as is done in UTRAN (RNTI: Radio Network Temporary Identifier).

3.1.2 Temporary Flow Identity

The TFI and Global_TFI need not be changed for Rel'00. The addressing space of TFI (up to 32 active TBFs per timeslot/assigned PDCHs) remains sufficient.

3.1.3 Packet Flow Control

The PFC need not be kept in Rel'00. The GERAN can get QoS parameters through Iu-ps by tunneling.

3.1.4 Radio Bearer Identity – RBid (also *RR related*)

3.1.4.1 Identification of a data connection

UMTS

In UMTS a data connection between the MS and 3G-SGSN is identified using network service access point identifier (NSAPI) *with which the requested quality of service parameters are associated*. The data connection is realized by a radio access bearer established by the 3G-SGSN to the radio access network. The radio access bearer identity is identical to NSAPI. In the radio interface a RAB is realized by one or several radio bearers that have their own identities (RBid). During the radio bearer setup the NSAPI is associated with radio bearers which in turn are associated with a channel. Therefore in UTRAN the channel number/identity unambiguously identifies the data connection and its quality of service paramaters and, hence, there is no need to carry either NSAPI or radio bearer identity in protocol headers (unambiguous mapping NSAPI/RB/Channel Mapping).

GPRS

In (E)GPRS, a data connection is identified using NSAPI (carried in SNDCP protocol header) *and* LLC protocol SAPI (carried in LLC protocol header). In GERAN'00 onwards SNDCP is replaced by PDCP that does not have NSAPI in any protocol header and LLC protocol RIP, hence, R97 type of identification cannot be used.

3.1.4.2 Multiplexing (in)flexibility

An important difference between GPRS and UTRAN PS is that GPRS MAC multiplexes LLC PDUs whereas UMTS MAC multiplexes transport (RLC) blocks (PDCP PDUs). For connections with different QoS, GPRS multiplexing is therefore inflexible, since the smallest multiplexing unit is an LLC PDU (of which the size may vary), as shown on figure 1 below. In addition, if there are different RLC modes for different SAPI, the TBF needs to be released and a new one established before data of a new LLC PDU (from a different SAPI) may be transferred. Before transmitting a new LLC PDU, Packet Resource Request message needs to be sent to indicate the characteristics (radio priority, peak throughput class, RLC mode) of the new LLC PDU (from the same or different SAPI)

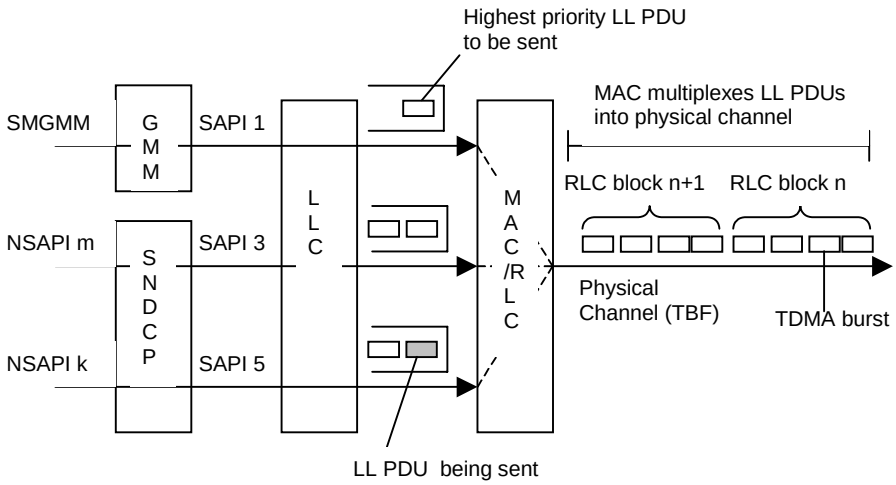

Fig. 1. Data Flow Multiplexing in GPRS

3.1.4.3 Proposal: RBid

As seen before, in GPRS a data connection is implicitly associated with an RLC TBF, meaning that only one data connection can be used at a time over the radio interface. The proposal below allows to multiplex several data connections in a flexible way onto one RLC temporary block flow. At the same time there can be one or more TBFs per MS.

In order to improve multiplexing capabilities of the GPRS RLC/MAC layer, the NSAPI has to be able to be identified in an RLC block. Therefore it is proposed that NSAPI be associated with an RBid. The association is done in a *new* radio bearer setup procedure in the RRC protocol.

For each radio bearer there is an RLC entity that takes care of control functions, e.g. segmentation/ reassembly and acknowledgements, related to the radio bearer. A new multiplexing functional entity within MAC protocol takes care of multiplexing of different radio bearers on a temporary block flow. On the sending side (Figure 2) the multiplexing functional entity adds a radio bearer identity to each RLC block or to the first RLC block in a temporary block flow. If only one radio bearer is in use then a radio bearer identity is

needed to add only to the first RLC block in the temporary block flow. The multiplexing functional entity multiplexes RLC PDUs from different radio bearers onto the temporary block flow depending on the radio bearers' priority or in more general depending on the quality of service attributes of the radio bearers. On the receiving side (Figure 5) different radio bearers can be demultiplexed by decoding the radio bearer identity. If the radio bearer identity is omitted then all RLC PDUs belong to the same radio bearer.

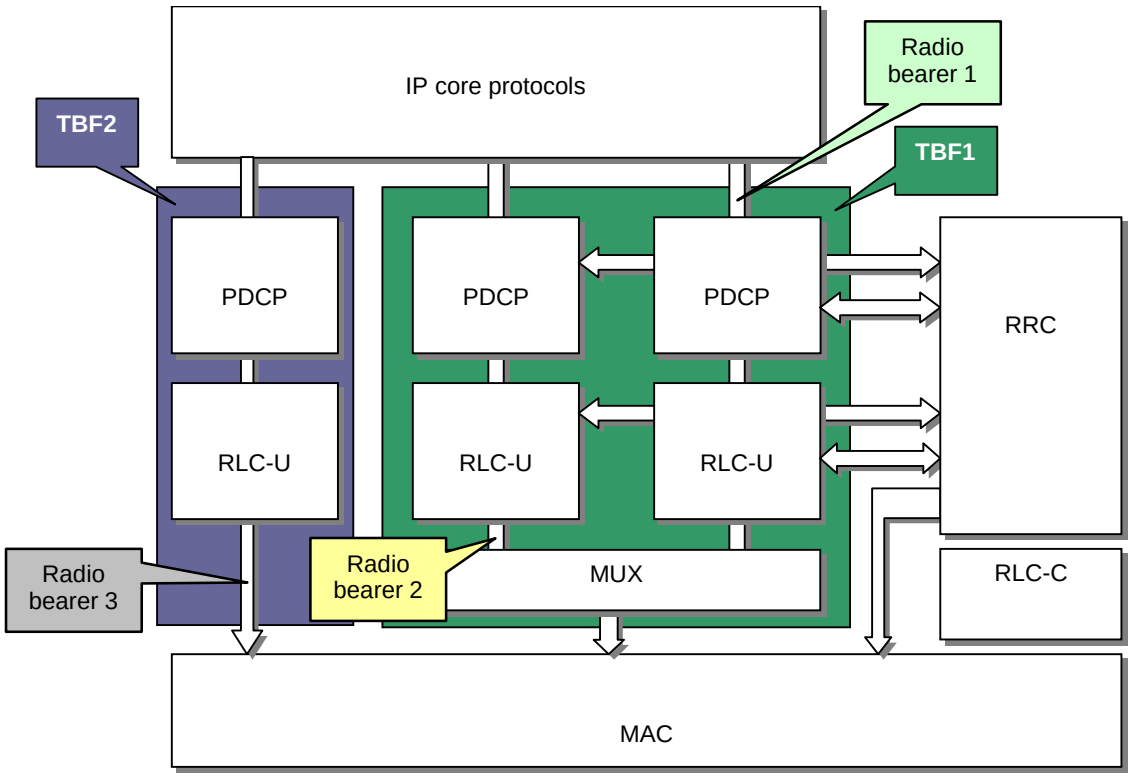

Fig. 2. Three RBs and Two TBFs;RB1 and RB2 are mapped on TBF1 and RB3 on TBF2

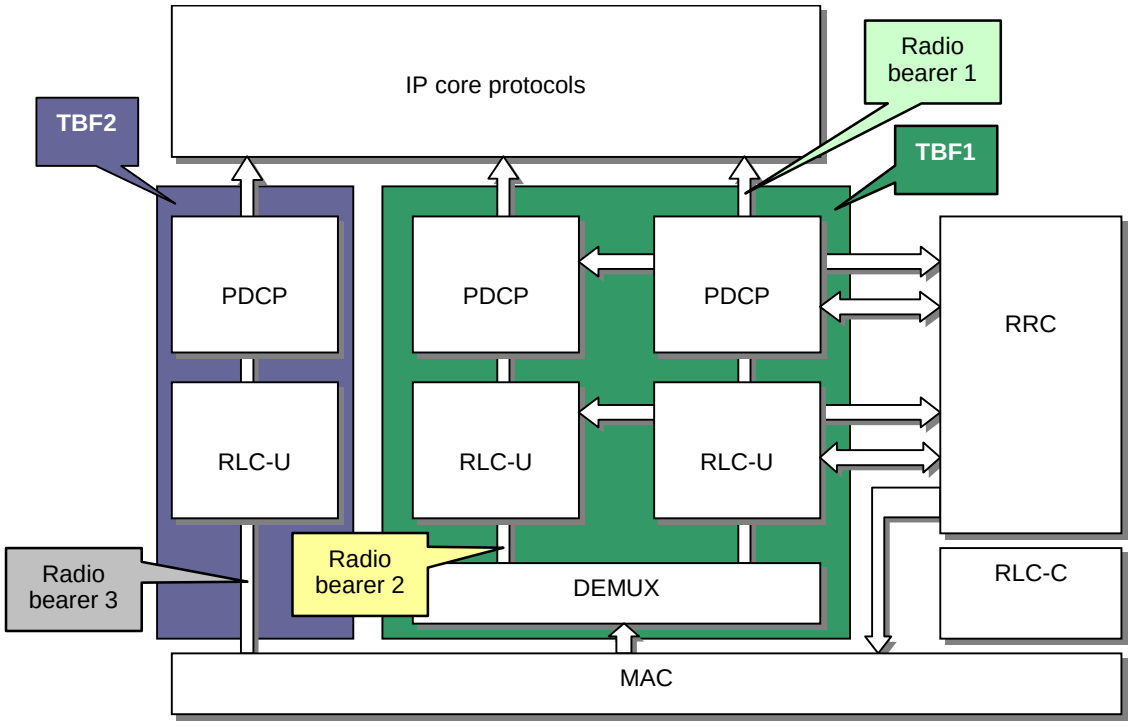

Fig. 3. On the receiver end RLC blocks on one TBF are demuxed using RBid

3.2 MAC modes: multiplexing

3.2.1 Dedicated Mode

In dedicated mode, the MS is allocated a dedicated physical subchannel for exclusive use of the bearers it supports.

Therefore the MAC layer shall provide priority handling between the different data flows of one mobile station, and must provide (de)multiplexing of higher layer PDUs delivered to/from the physical layer on dedicated physical subchannels. The identification of multiplexing is contained in the MAC protocol control information.

No user identification needs to be included in case of OS1. In case of OS2, distinction must be possible between the different flows. This information may either be carried in each block or each time a flow becomes active. Therefore the TFI needs to be included when data is carried on the PDTCH.

Priority handling between different data flows requires efficient mutliplexing between flows with different QoS requirements. This implies that the data units multiplexed together be as small as possible and that an on-going flow may be temporarily interrupted to let more prioritary data be transmitted.

3.2.2 Shared Mode

In shared mode, traffic flows from one or more MSs may be multiplexed on the same physical subchannel.

In this mode, it must be possible to identify the MSs on the shared physical subchannels. Inband identification is needed to address an MS in the downlink or identify an MS in the uplink. TFI is needed in the data flow.

No timeslot segregation is assumed between Rel'99 and further Releases MS, as proposed in [3], therefore Rel'99 mechanisms need to be supported in Rel'00.

3.2.3 Multiplexing

Multiplexing between users in downlink is straightforward (TFI).

The dedicated MAC mode can be realized simply through fixed allocation. No major change is expected for setting up the fixed allocation. I.e. existing assignment messages may be reused but need to be changed to indicate the dedication of the physical subchannel(s).

The shared MAC mode can be realized through either dynamic allocation or fixed allocation. The USF granularity may be modified in order to optimize the use of resources in UL. Currently only blocks of 1 or 4 RLC/MAC blocks may be set to be sent.

3.3 TBF release

In R99 a Temporary Block Flow is released after the MS has sent and the network has received the last RLC block in the buffer. In R00 the TBF is kept alive (TFI allocated etc) after receiving the final block until

1. a new block is received => transmission may continue normally

2. release timer expires (timeout period may be set to 0 => R99 procedure) or a release message is received => release TBF

Detailed procedures are FFS (all or only part of the above procedures may be used).

3.4 Fast Access

Fast Access is not used in dedicated MAC mode. Fast Access can be used to request physical resources back in shared mode of operation. It is targetted mainly for interactive services (Chat, Telnet, Games,…).

4. CONCLUSIONS

This document addressed two main issues for the MAC layer in GERAN that are identification (MS/flow) and multiplexing (MS/flow). (E)GPRS provides mechanisms which can be reused (and some modified) to realize these, therefore they should be kept for Rel'00. Parallel TBFs and new TBF release procedure is proposed. Further RBid (and relation with TBF) is proposed to be introduced in GERAN'00 which allows to identify a data connection over the air interface:

- NSAPI (and thus a related quality of service parameters) is unambiguously mapped to radio bearer identities,
- a radio bearer identity is used only once for one MS i.e. the same numeric value of radio bearer identity cannot be associated with two NSAPIs in the one MS,
- a radio bearer identity is carried in the RLC block
    - in the beginning of temporary block flow,
    - every time a radio bearer is changed, a changed radio bearer identity functions also as a new channel request (if quality of service requirements of a new radio bearer are different from the previous radio bearer),
- a radio bearer identity is included in RLC acknowledgement messages.

5. REFERENCES

[1] SMG2#35, Tdoc 2-00-947, "GERAN System Concept Document", SMG2, 3-7 April 2000, Schaumburg, IL, USA

[2] SMG2EDGE#14, Tdoc 2e00-133, "GERAN Radio Interface Protocol: Stage2", Nokia, Ericsson, 8-12 May 2000, Seattle, WA, USA

[3] SMG2#35, Tdoc 2-00-629, "Timeslot Segregation Release 1999/2000/2001", Ericsson, 3-7 April 2000, Schaumburg, IL, USA

[4] GSM 04.60, "GPRS RLC/MAC protocol", February 2000

[5] UMTS 23.060, "GPRS Service Description",

[6] GSM 03.03, "Numbering, Addressing and Identification"

[7] GSM 04.64, "MS-SGSN LLC layer specification"

[8] 3GPP TSG GERAN AdHoc #1, "MAC Design for GERAN'00", Nokia, 7-11 August, Helsinki, Finland

APPENDIX A: Connections identifiers in UMTS

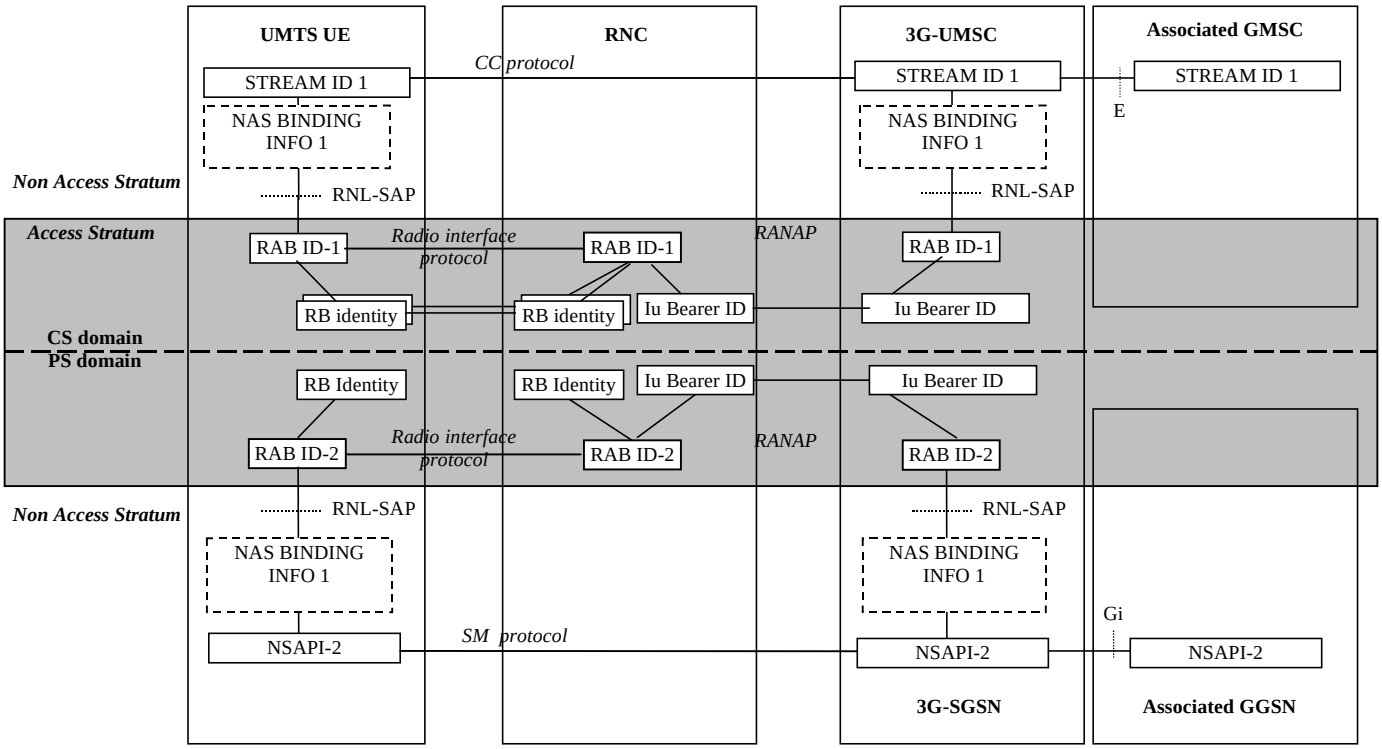

Note: Protocol IEs are presented in the figure with solid line boxes and concept with broken line boxes.

Fig. A. Connection identifiers in UMTS as shown in s2-000451