3GPP TSG CT4 Meeting #68bis C4-150408
Bratislava, Slovakia; 13th – 17th April 2015
Source: Alcatel-Lucent
Title: DISC: WebRTC gateway - High-level stage 2 procedures

H.248 WebRTC gateway
–
High-level stage 2 procedures

Background

To do:

update 29.334 Rel-13 towards a complete "H.248 IMS-WebRTC gateway" function

⇒ stage 2 procedures for 23.334

⇒ scope of C4-150408 DISC document = high-level stage 2 procedures

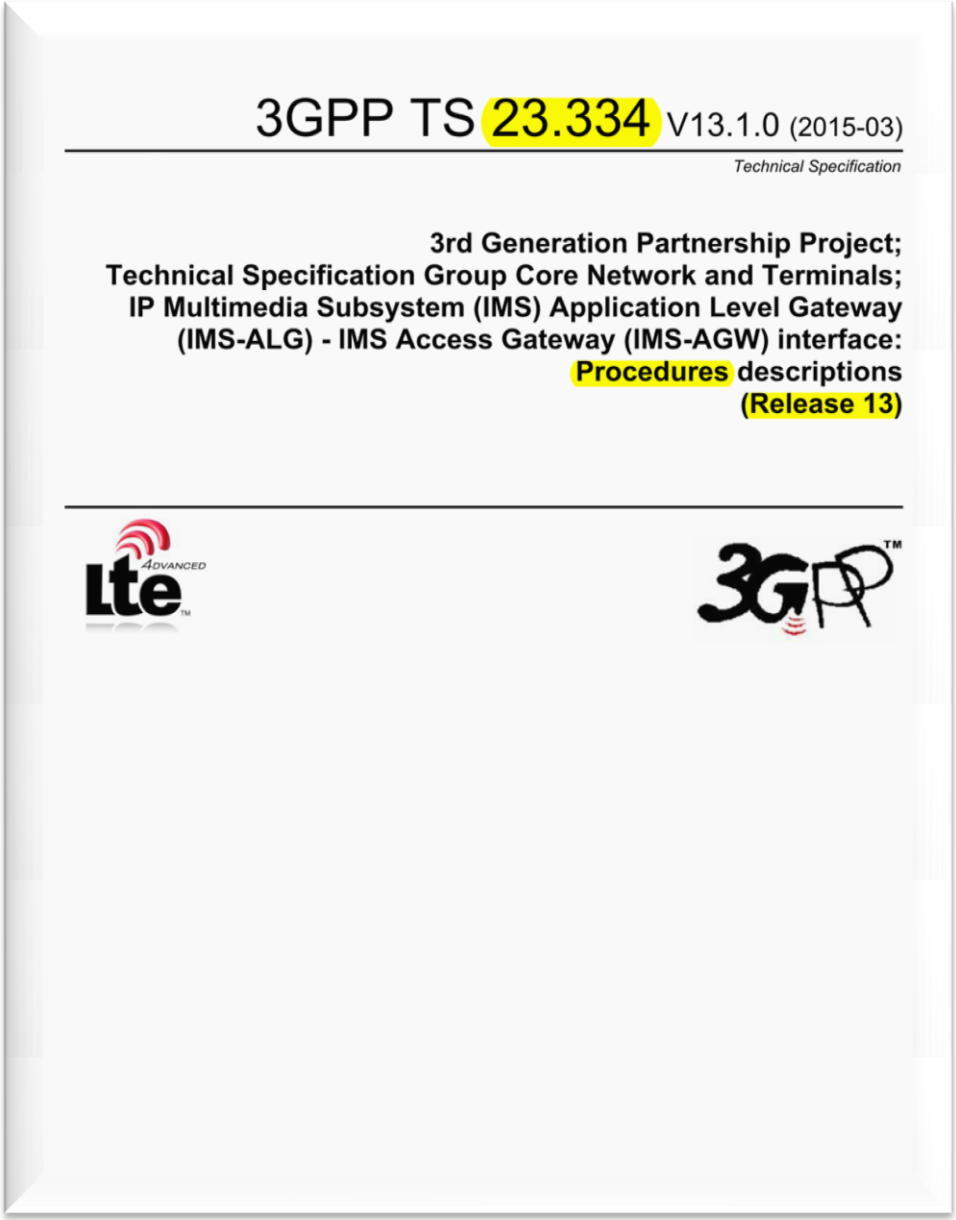

3GPP TS 23.334 V13.1.0 (2015-03)

Technical Specification

3rd Generation Partnership Project;
Technical Specification Group Core Network and Terminals;
IP Multimedia Subsystem (IMS) Application Level Gateway (IMS-ALG) - IMS Access Gateway (IMS-AGW) interface: Procedures descriptions
(Release 13)

Overview

Example use cases for communication establishment phase

- Use case #1: audio & video only, unbundled
- Use case #2: audio & video only, bundled
- Use case #3: additional data, preparation of transport
- Use case #4: dynamic establishment of data channels
- Use case #5: data IWF for MSRP
- Use case #6: MG enhancement – additional usage of stream interlinkage

Example use cases for release of data channels and call release

- Service cancellation for WebRTC data in H.248 WebRTC media gateways
- Use case #7: release of a data channel without call release
- Use case #8: SCTP association shutdown without DTLS connection release
- Use case #9: complete call release

Example use cases for extended stream grouping models

- Use case #10: separation of SCTP association and DTLS connection
- Use case #11: separation of Layer 4 in order to isolate ICE-based L4 modifications
- Use case #12: WebRTC with bundled audio & video plus multiple data channels

Reference model

Scope of CT4:

H.248 Profile for WebRTC gateway entity

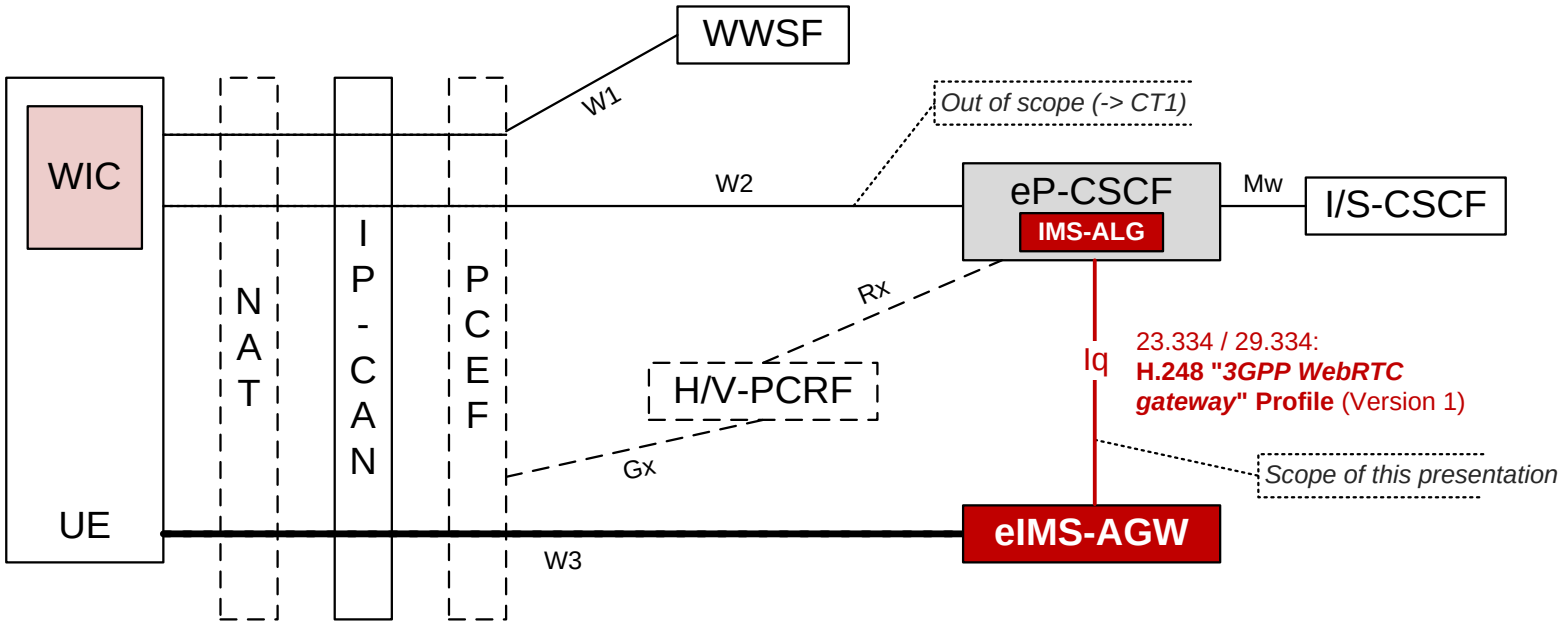

Conventions

Synonym terms:

3GPP Network Function	H.248 Entity
IMS-ALG	Media Gateway Controller (MGC)
IMS-AGW, eIMS-AGW	Media Gateway (MG)

Use case #1: audio & video only, unbundled

- already supported by Rel-12

Why discussed again?

- DTLS procedural semantics (DTLS session vs DTLS connection; "reuse" of DTLS sessions/connections, i.e., DTLS resumption / DTLS renegotiation)
- Shared "DTLS resources" between WebRTC audio/video (due to SRTP key exchange) and WebRTC data?

Conclusion:

WebRTC audio/video & WebRTC data are loosely coupled via "WebRTC transport stack" …

Table 1.1 – Use case #1 and variations

UC:	Characteristic:	Comments
#1.0	• audio & video only • unbundled (i.e., no RTP media multiplexing) • no RTP transport multiplexing • media security model: "e2ae" • IWF "audio": transcoding (TC) • IWF "video": transparent forwarding (TF) • NAT-T (AN side): stable connectivity (i.e., no ICE updates) • SRTP key exchange: only once, DTLS connections immediately released again • DTLS: non-resumable DTLS session	Number of L4 connections: • 4 (2 x RTP and 2 x RTCP) • ICE/STUN procedures: four times, for each L4 connection Number of DTLS connections: • 4 (because non-resumable DTLS sessions) • thus, 4 x DTLS full handshakes, leading to four DTLS connections • Enhancement option: a single resumable DTLS session … Number of SRTP key exchange procedures: • 4 (SRTP master key negotiation for each RTP and RTCP stream) • Enhancement option: SRTCP keys derived from SRTP keys
#1.1	as #1.0 with following change: • media security model: "e2e"	i.e., SRTP-to-SRTP interworking in a back-to-back RTP endsystem (B2BRE) topology with two different SRTP key management schemes (H.248 terminations T1: DTLS-SRTP; T2: SDES)
#1.2	as #1.0 with following change: • DTLS connection remains in "data transfer ready state"	What happens in case of additional data channels (see e.g. clause 3.4)?
#1.3	as #1.0 with following change: • IWF "audio": also transparent forwarding	

Figure 1.1: H.248 WebRTC gateway – H.248 Context model – Use case #1: audio & video only, unbundled audio & video

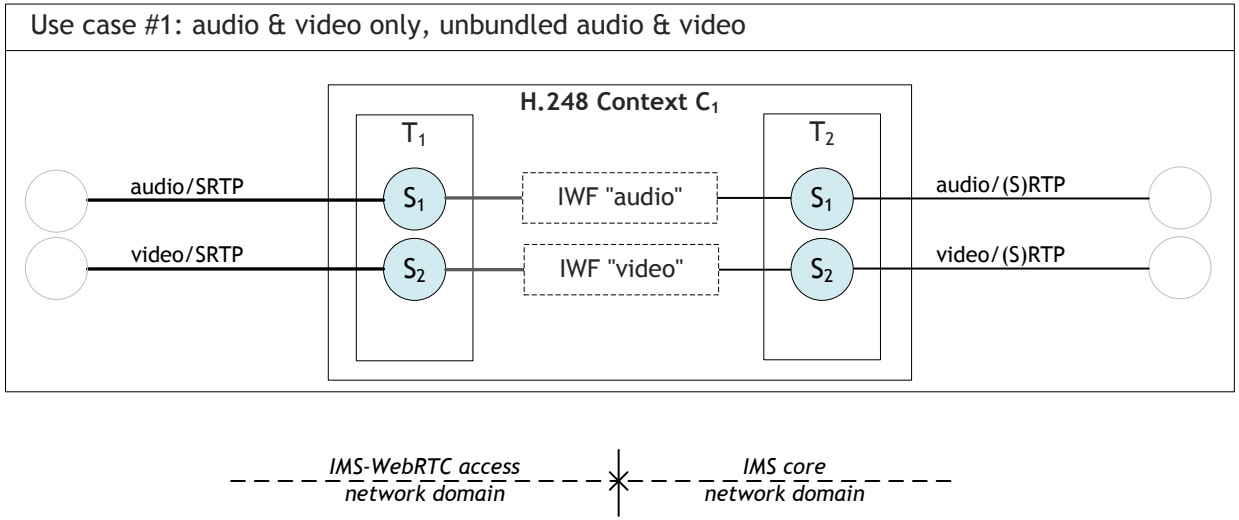


```
RFC 5764                    SRTP Extension for DTLS                    May 2010
```

Reminder:

each unbundled (H.248) WebRTC media/SRTP stream contains two L4 connections inclusive two DTLS connections …

⇒ H.248 SEPs T1(S1) & T1(S2) apply "RFC 5764 multiplexing/demultiplexing":

```
                 +----------------+
                 | 127 < B < 192  -+--> forward to RTP
                 |                 |
   packet -->    |  19 < B < 64   -+--> forward to DTLS
                 |                 |
                 |       B < 2    -+--> forward to STUN
                 +----------------+

Figure 3: The DTLS-SRTP receiver's packet demultiplexing algorithm.
     Here the field B denotes the leading byte of the packet.
```

Figure 1.2

Example signalling flow for use case #1.0

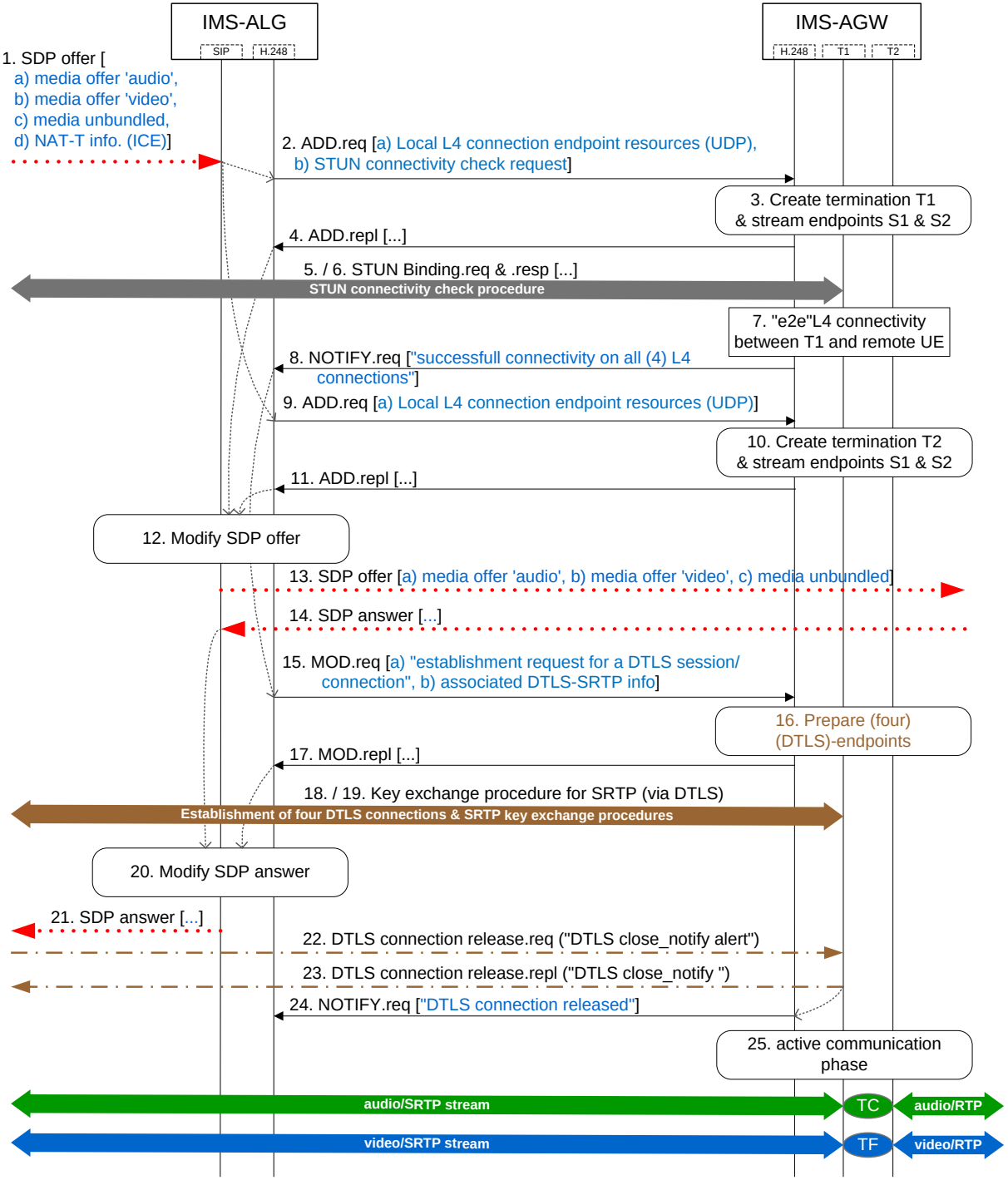

Use case #2: audio & video only, bundled

- not supported by Rel-12,
- out of scope of Rel-13
- presented due to demonstration of *H.248 stream grouping* concept (as required for WebRTC data, see use case #3 ff)

Table 2.1 – Use case #2 and variations

UC:	Characteristic:	Comments
#2.0	as #1.0 with following changes: • bundled (i.e., RTP media multiplexing, also known as RTP SSRC multiplexing) • also RTP transport multiplexing	Number of L4 connections: • 1 (both RTP media flows and associated RTCP control flows multiplexed on a single UDP connection) • ICE/STUN procedures: once Number of DTLS connections: • 1 Number of SRTP key exchange procedures: • 1 (SRTP master key negotiation and then key derivation for all RTP media and RTCP control flows)
#2.1	as #2.0 with following change: • media security model: "e2e"	
#2.2	etc	

Figure 2.1: H.248 WebRTC gateway – H.248 Context model – Use case #2: audio & video only, bundled audio & video

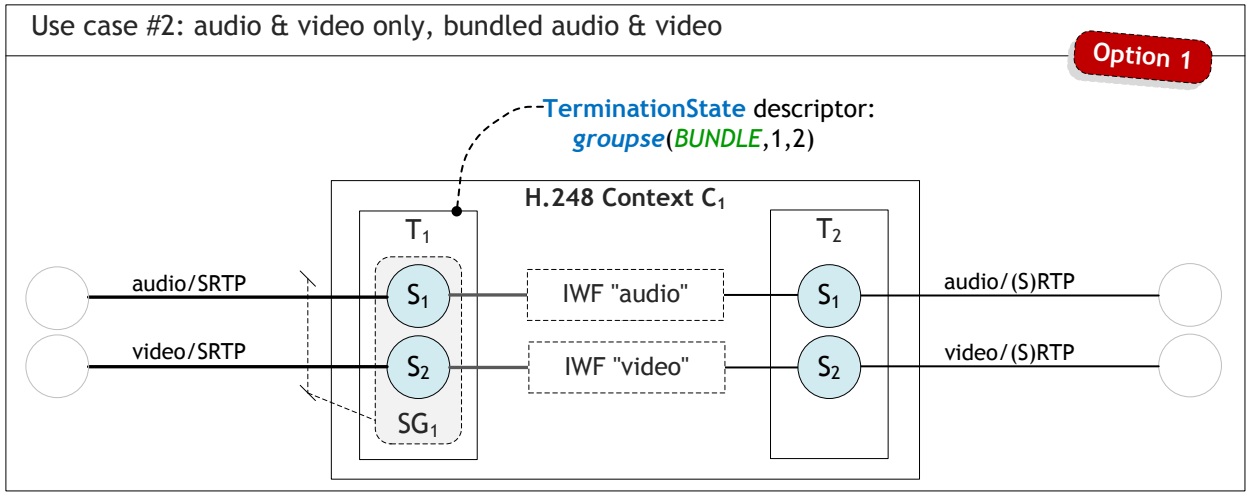

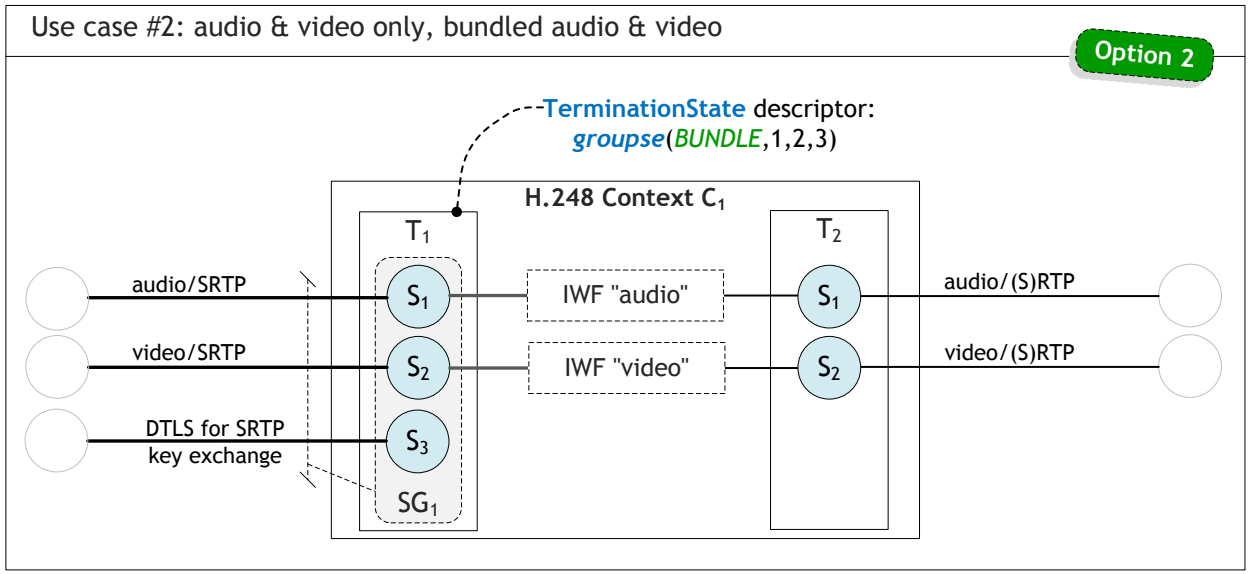

Figure 2.2

Example signalling flow for use case #2.0

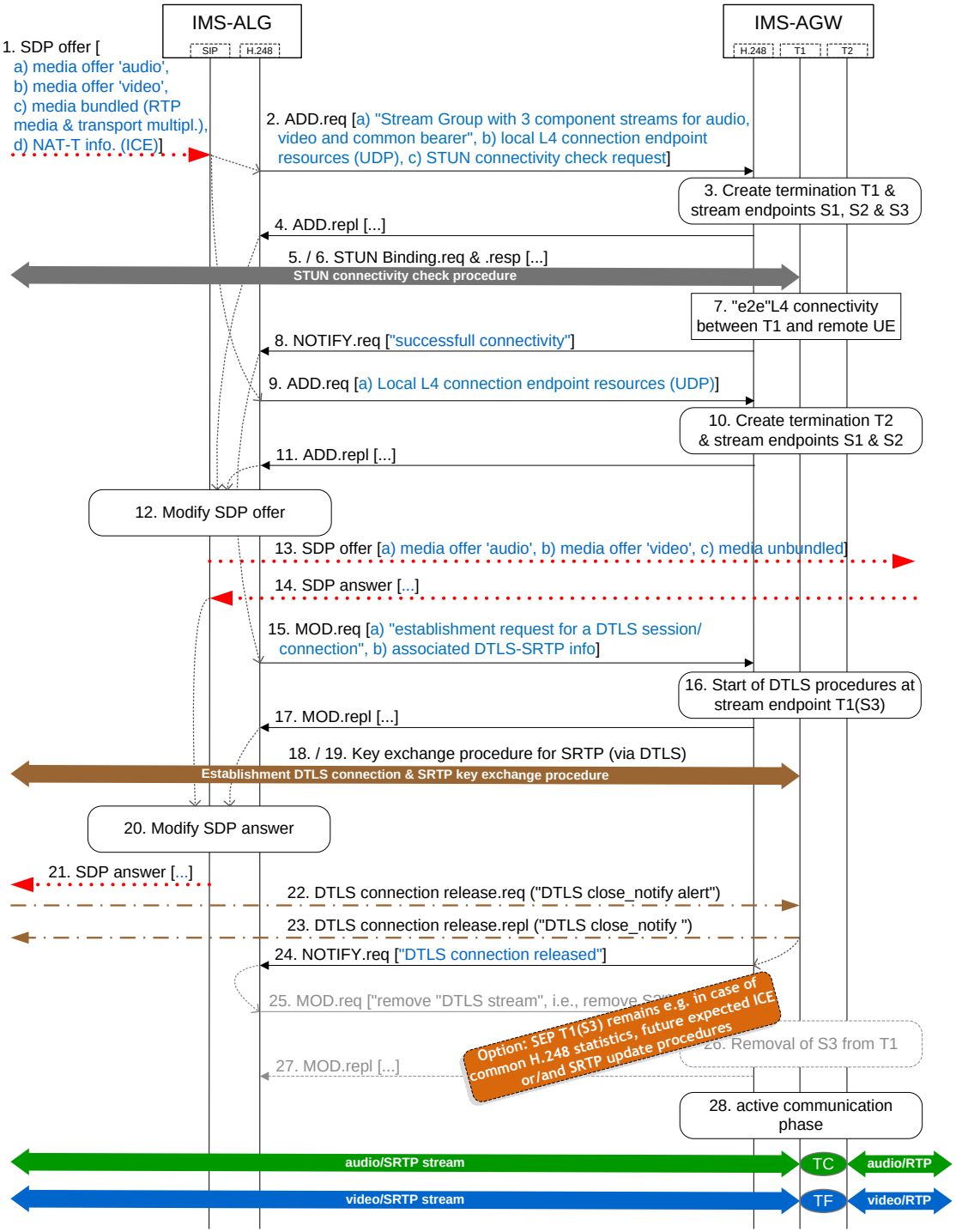

Use case #3: additional data, preparation of transport

New (WebRTC data, Rel-13)

Table 3.1 – Use case #3 and variations

UC:	Characteristic:	Comments
#3.0	• SIP: SDP Offer indicates "…/DTLS/SCTP" transport, but still missing SDP attributes for a WebRTC data application • L4 protocol: UDP, expected successful NAT traversal • single SCTP association per DTLS connection (default for WebRTC) • preparation of three H.248 streams for potential future WebRTC data applications in the H.248 WebRTC gateway; the preparation includes already the local reservation and assignment of SCTP StreamIDs for each DC candidate	• the preparation and establishment of a **DTLS session/DTLS connection** for SCTP traffic is already feasible • the preparation and establishment of an **SCTP association** after successful DTLS connectivity is also feasible • however, the preparation of **local DC resource**s is conditional, dependent on **pro-active** or **on-demand** resource management strategies of MGW resources • the pro-active strategy is selected for this use case due to expected later WebRTC data applications
#3.1	as #3.0 with following change: • no preparation of WebRTC data channels	• thus, only the H.248 deaggregation stream will be established, but not yet any H.248 component streams for DCs would be created

Figure 3.1: H.248 WebRTC gateway – H.248 Context model – Use case #3.0: additional data, preparation of transport

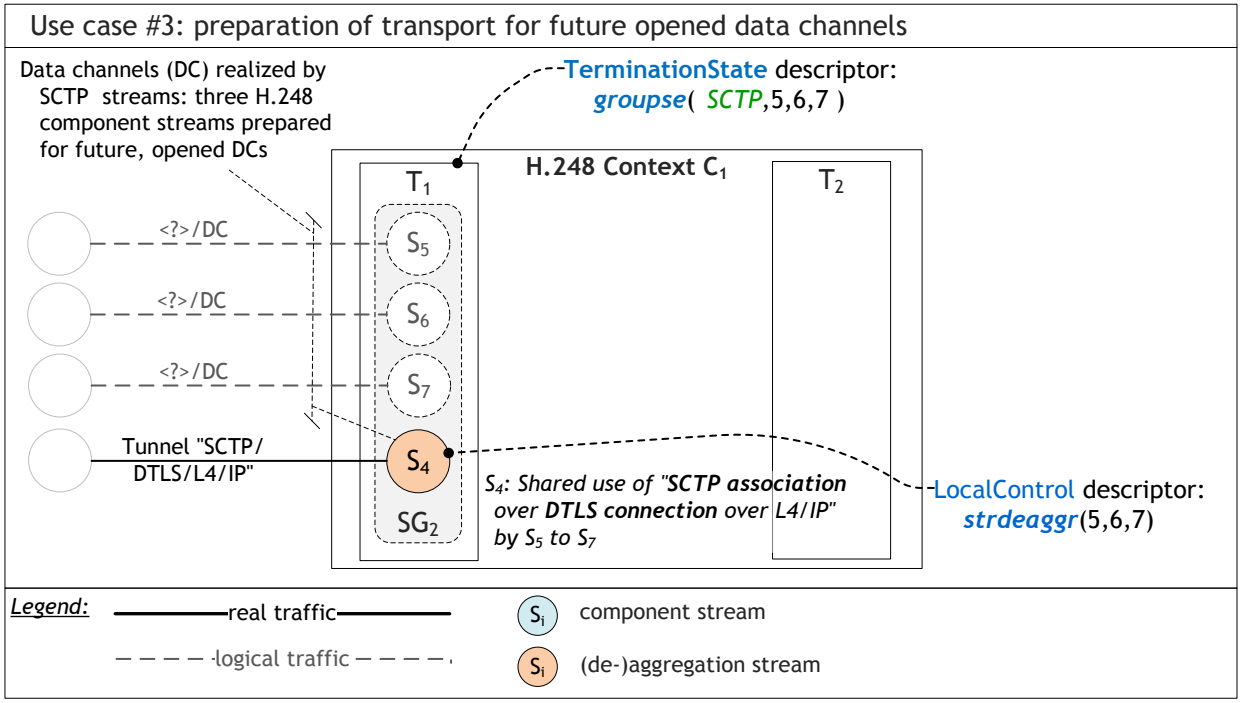

Figure 3.2

Example signalling flow for use case #3.0

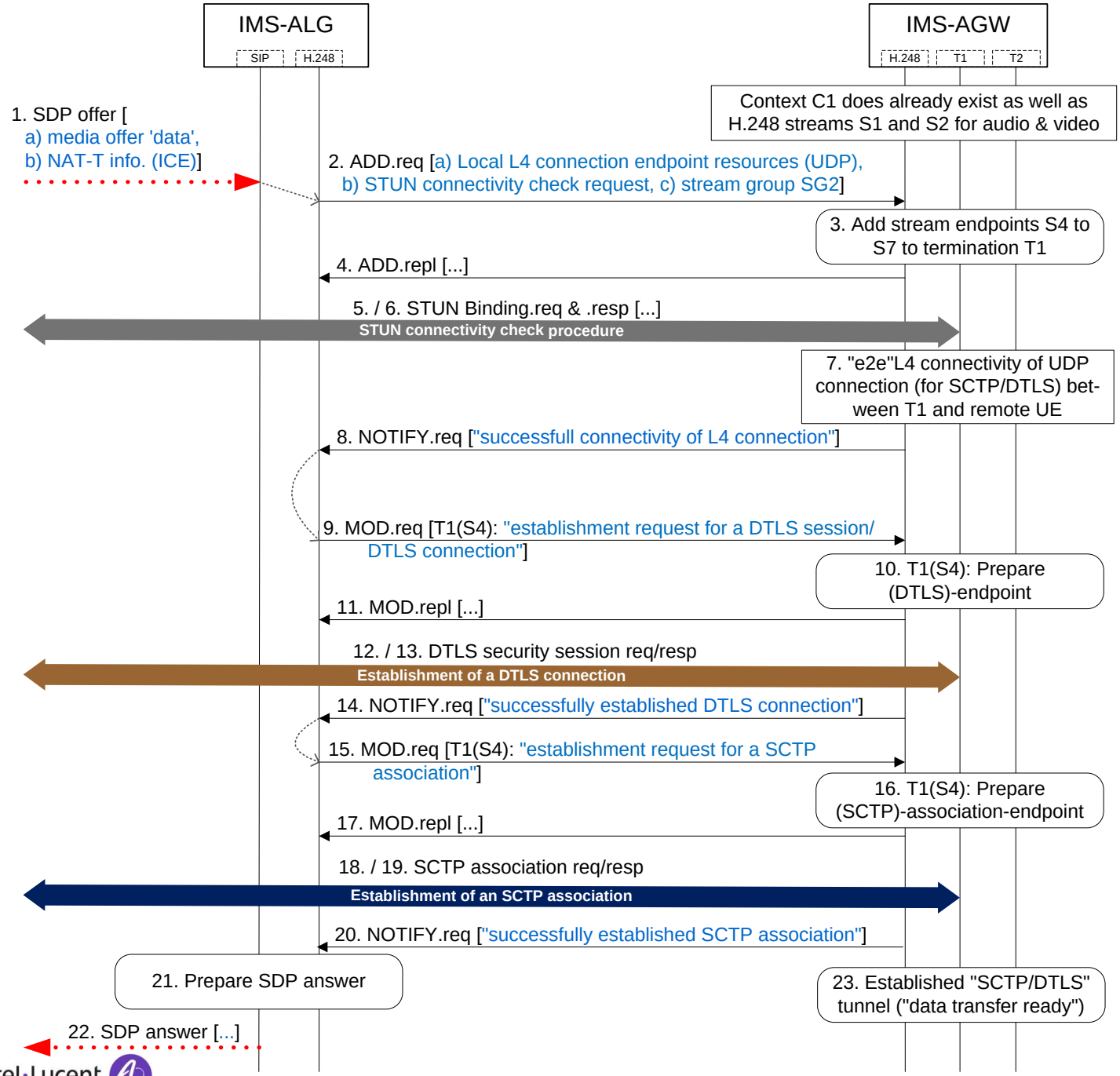

Use case #4: dynamic establishment of data channels

New (WebRTC data, Rel-13)

Table 4.1 – Use case #4 and variations

UC:	Characteristic:	Comments

#4.0	• SIP reINVITE: SDP Offer provides a media description containing <u>at least</u>, e.g.:
	`m=application <…> UDP/DTLS/SCTP webrtc-datachannel`
	`a=dcmap:1 label="…"; subprotocol="t140"`
	…
	• H.248 component stream S5 (of SG2) is used for "realtime text"
		The UC highlights following aspects:
		• Data channel "open": no usage of the DCEP (Data Channel Establishment Protocol) due to the alternative of complete out-of-band DC signalling;
		• a (WebRTC)-DC-endpoint could immediately send data, which implies the allocation of buffer resources in the MG (tbc);
		• H.248 WebRTC gateway interworking function: "T.140 transparent forwarding" with underlying "SCTP/DTLS/L4" to "RTP/UDP" interworking.
		• Hence, SEP T2(S5) represents an "RTP endsystem" topology.
		• Further, the bearer change from "data/SCTP" to "data/RTP/UDP" represent a change from an assured to a non-assured transport service. Thus, RTP packet redundancy is used in the example below (in the non-WebRTC domain) …
		• … and it's still open whether the WebRTC domain should use a realiable or unreliable data channel service.

#4.1	as #4.0 with following change: • but #3.1 as starting point (i.e., there wasn't yet any preparation of the "tunnel" in the user plane, thus not yet any H.248 stream group SG2 …)	
#4.2	as #4.0 with following change: • immediate establishment of three (instead of just one) WebRTC data channels	

Figure 4.1: H.248 WebRTC gateway – H.248 Context model – Use case #4.0: first data channel in service

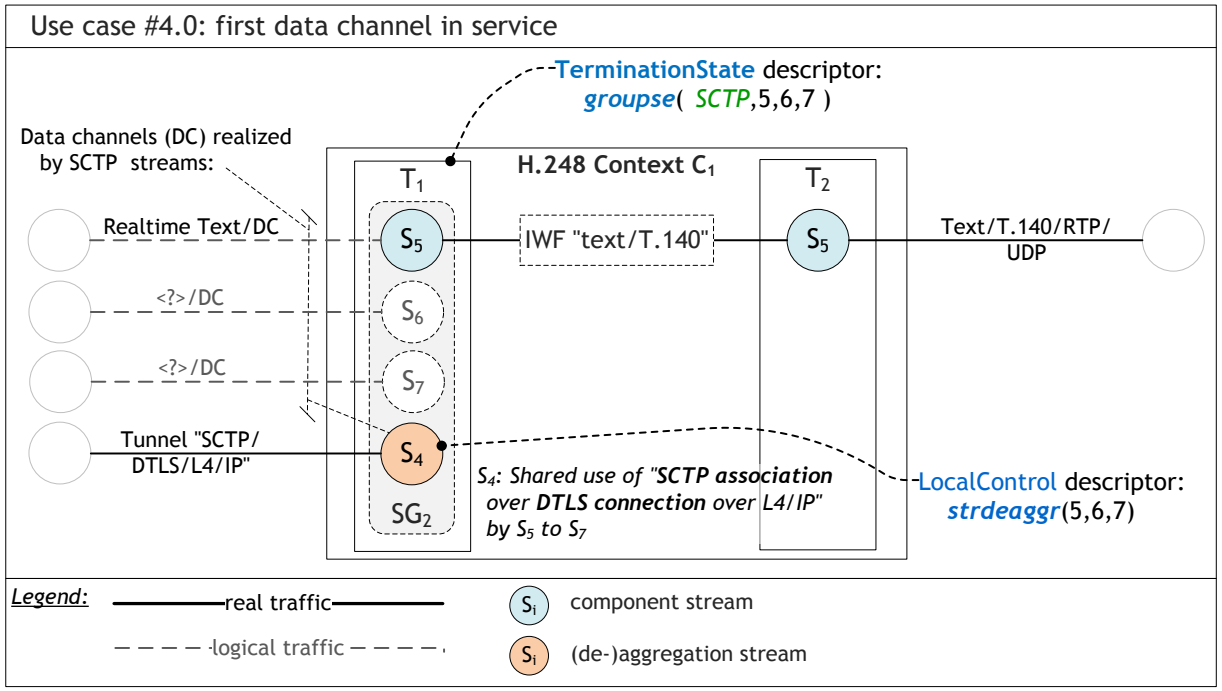

Figure 4.2

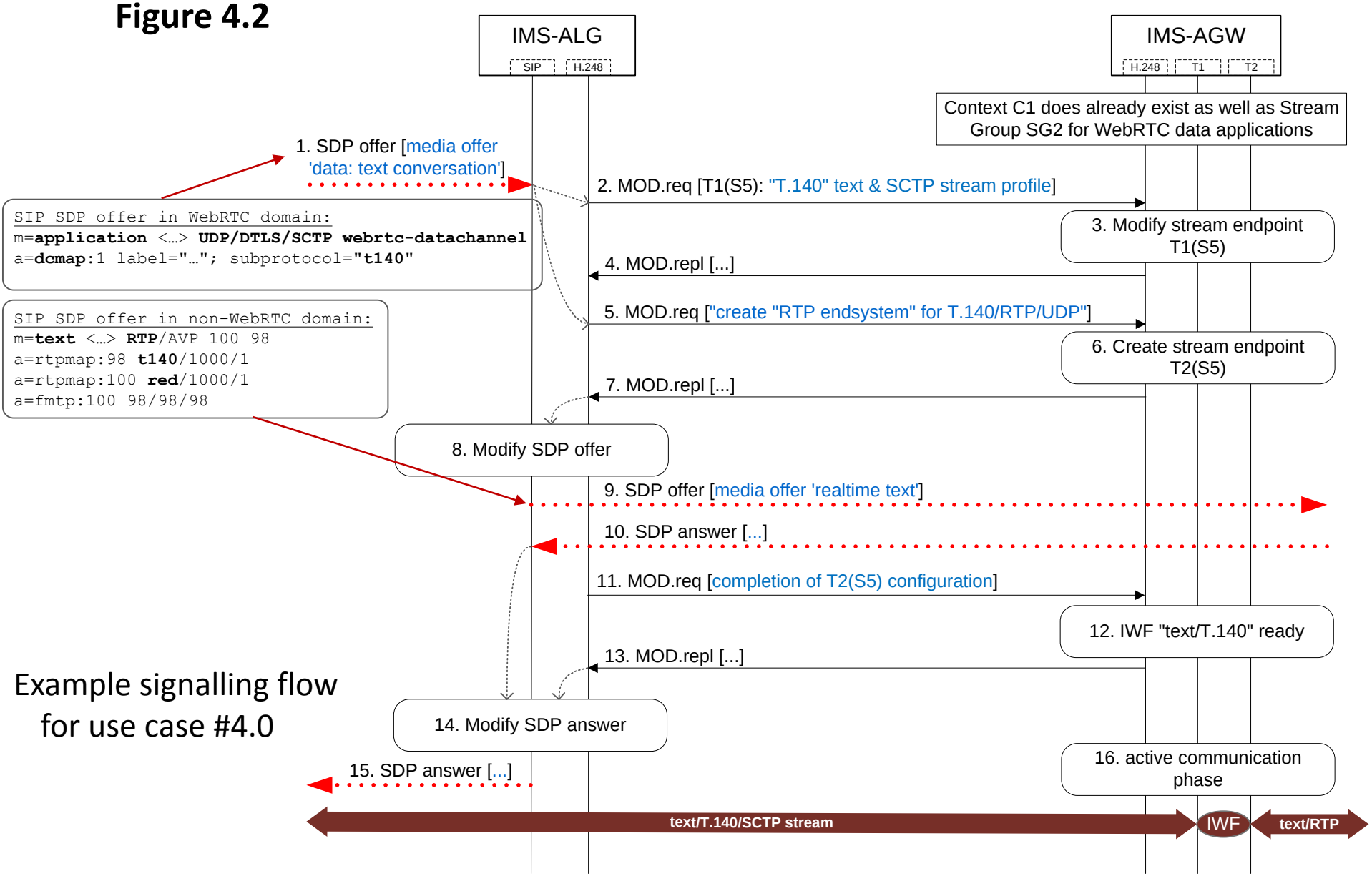

Example signalling flow for use case #4.0

Use case #5: data IWF for MSRP

New (WebRTC data, Rel-13)

Table 5.1 – Use case #5 and variations

UC:	Characteristic:	Comments

#5.0	• SIP reINVITE: SDP Offer provides a media description containing, e.g.:
	`m=application <…> UDP/DTLS/SCTP webrtc-datachannel`
	`a=dcmap:2 label="chat"; subprotocol="MSRP"`
	`a=dcsa:2 accept-types:message/cpim text/plain`
	`a=dcsa:2 path:msrps://ben….;dc`
	…
	• H.248 component stream S6 is used for "realtime text"
		The UC highlights following aspects:
		• actually, only a subset of SDP information from attributes "a=dcmap" and "a=dcsa" should be signalled via H.248, only the information relevant for configuration of the H.248 MG-level IWF

#5.1	as #5.0 with following change: • additional TLS in non-WebRTC domain	• stack MSRP/TLS/TCP/IP at SEP T2(S6)

Figure 5.1: H.248 WebRTC gateway – H.248 Context model – Use case #5.0: data IWF for MSRP

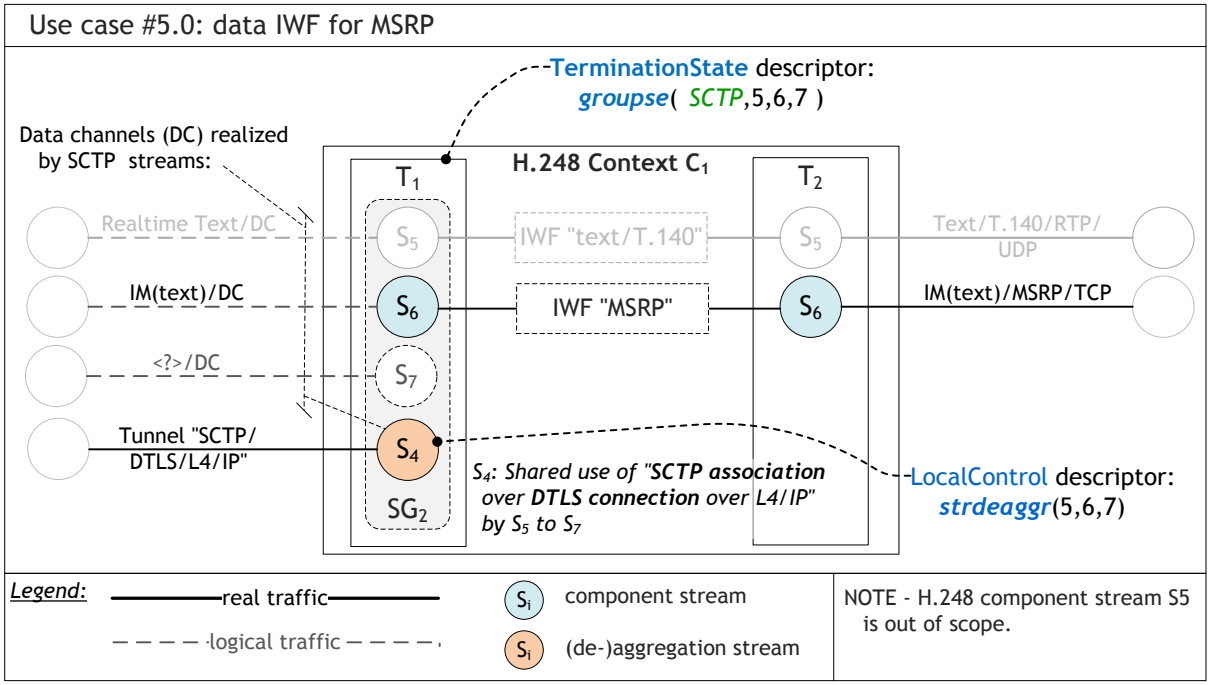

Figure 5.2

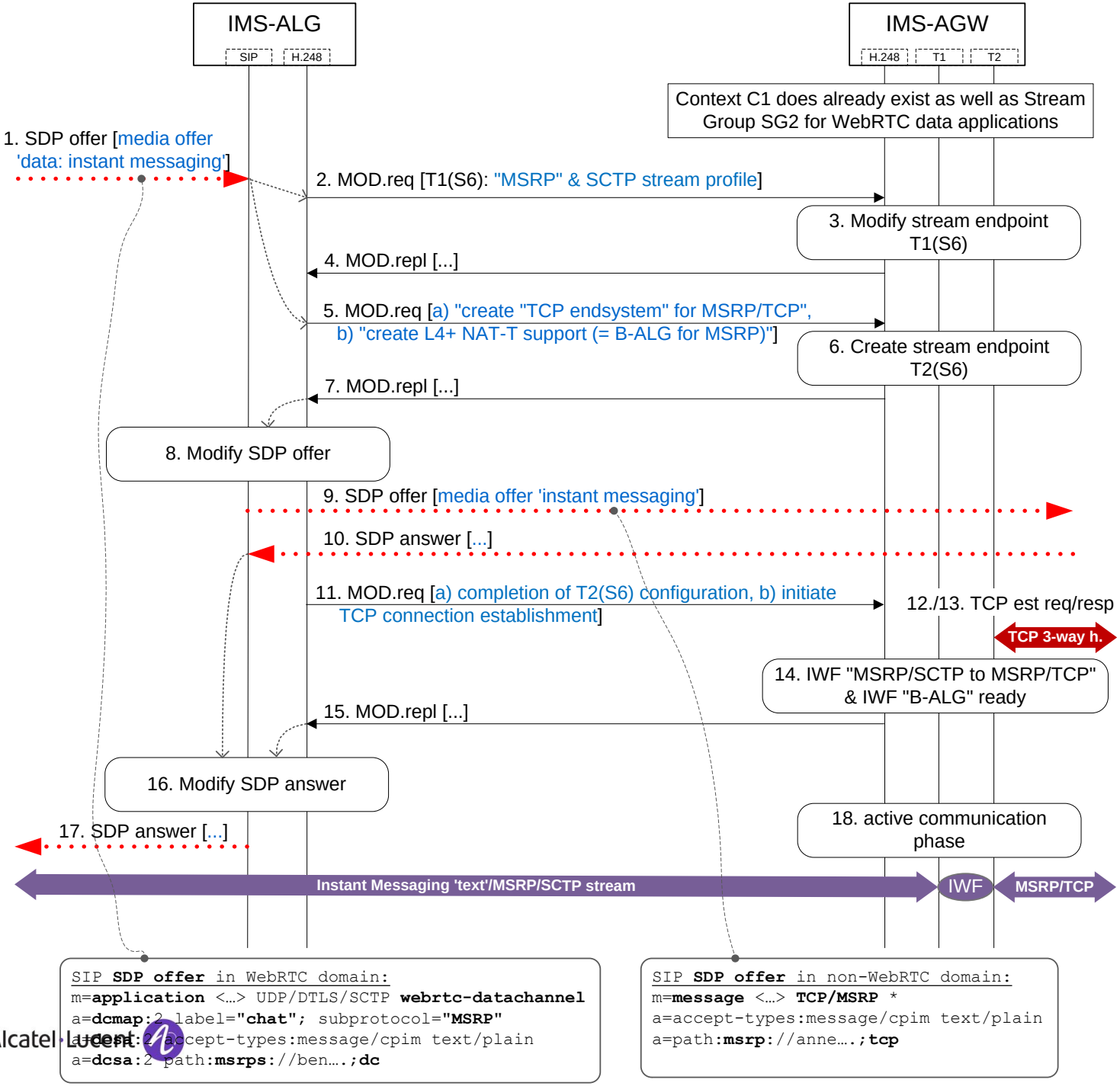

Example signalling flow for use case #5.0

Use case #6: MG enhancement – additional usage of stream interlinkage

New (WebRTC data, Rel-13)

Table 6.1 – Use case #6 – Examples for stream interlinkage *within* the H.248 WebRTC termination

UC:	Characteristic:	Comments
#6.0	DTLS-to-SCTP interlinkage (establishment): • successful DTLS connection establish-ment triggers the SCTP association est-ablishment procedure	• type "*intra-SEP interlinkage*" in case of a H.248 stream grouping model where both, the (DTLS)-connection-endpoint and (SCTP)-association-endpoint are part of the same H.248 SEP (e.g., see Figure 4.0, deaggregation SEP T1(S4)) • type "*intra-Termination interlinkage*" in case of a H.248 stream grouping model where the (DTLS)-connection-endpoint and (SCTP)-association-endpoint would be assigned to separate H.248 SEPs (e.g., see Figures 9.1 and 10.1)
#6.1	SCTP-to-DTLS interlinkage (release): • successful SCTP association shutdown triggers the DTLS connection release procedure	• type "*intra-SEP interlinkage*" in case of a ….(see #6.0) • type "*intra-Termination interlinkage*" in case of a ….(see #6.0)
#6.2	(SCTP-stream)-to-(SCTP)-association interlinkage (release): • precondition: only a single DC is still in use; • a SCTP Stream reset procedure (as WebRTC DC closure) triggers the shutdown of the SCTP association	• type "*intra-Termination interlinkage*" due to the H.248 stream grouping model where the (SCTP)-stream-endpoints and the (SCTP)-association-endpoint are assigned to separate H.248 SEPs (e.g., see Figure 4.1)

Figure 6.1: H.248 WebRTC gateway – H.248 Context model – Use case #6: Examples for stream interlinkage *within* the H.248 WebRTC termination

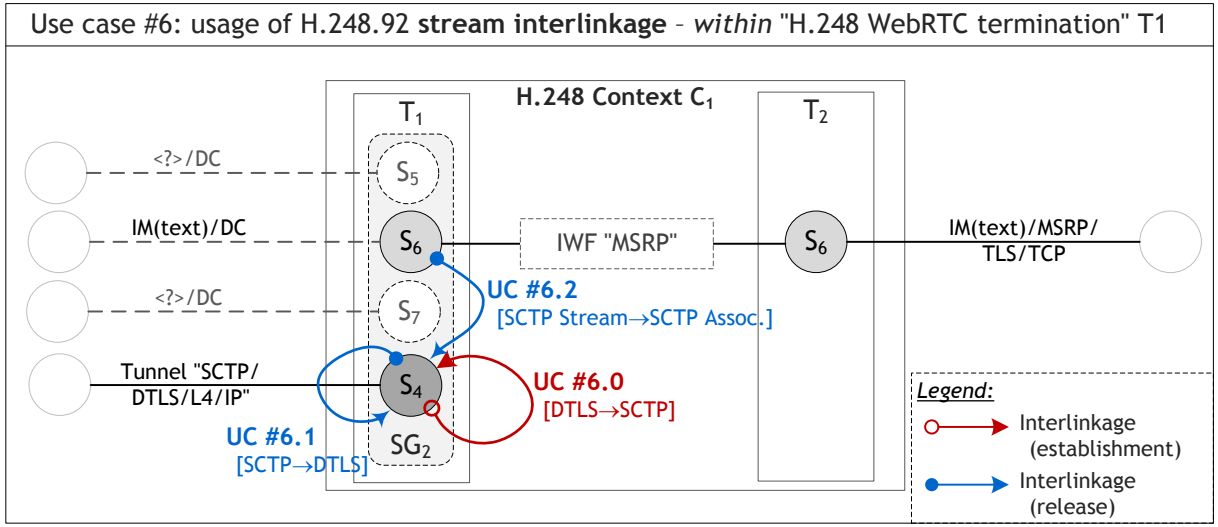

Table 6.2 – Use case #6 – Examples for stream interlinkage *between* terminations T1 & T2

UC:	Characteristic:	Comments
#6.4	FIXTHIS	
to		
#6.25		

Figure 6.2: H.248 WebRTC gateway – H.248 Context model – **Use case #6: Examples for stream interlinkage *between* terminations T1 & T2**

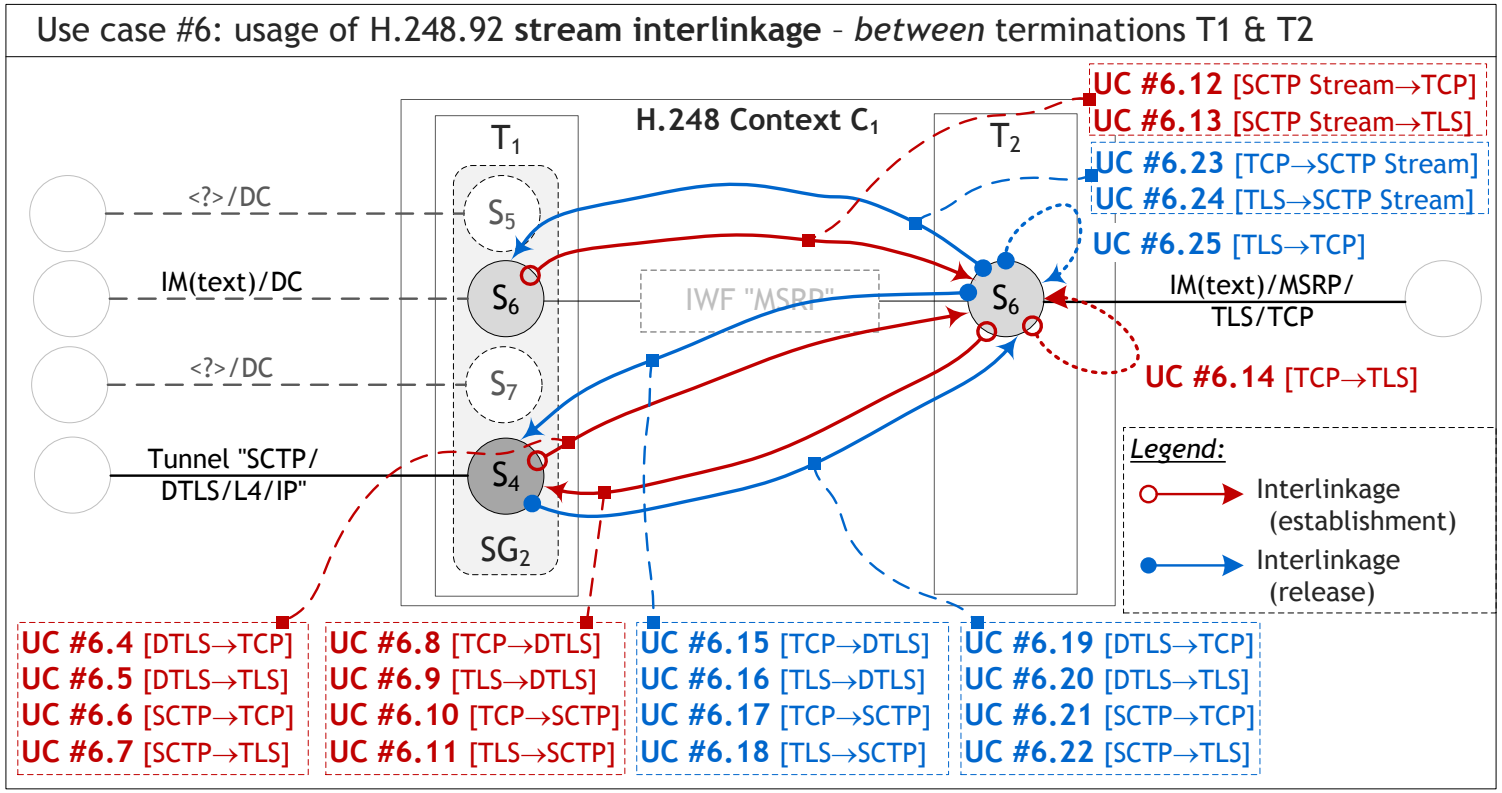

Use case #7: release of a data channel without call release

New (WebRTC data, Rel-13)

Table 7.1 – Use case #7 and variations

UC:	Characteristic:	Comments
#7.0	• existing H.248 stream group with three active data channels (i.e., three H.248 component streams) • closing of 1-out-of-3 data channels • underlying SCTP stream is kept after the SCTP stream reset procedure	• we don't consider the level of detail concerning the directionality of the DC closure procedure • MGC removes SEP at the non-WebRTC termination T2, but keeps SEP at WebRTC termination T1 (of the original H.248 SEPP)
#7.1	as #7.0 with following change: • resetted SCTP is not intented to be reused, thus, MGC removes H.248 SEP	• there are two options again: the H.248 stream group SG2 is either not modified or updated according the actual stream group size
#7.2	as #7.0 with following change: • closing of 2-out-of-3 or 3-out-of-3 data channels	• the RFC 6525 SCTP Stream re-configuration procedure allows the reset of multiple streams in parallel … • … hence, that "SCTP bearer control procedure" is actually running at the H.248 deaggregation stream T1(S4) and not at the affected H.248 component streams (ffs)
#7.3	• release of all data channels and subsequent shutwdown of the SCTP association	• there are two options again: either the underyling DTLS connection is also released or not (yet)

Figure 7.1: H.248 WebRTC gateway – H.248 Context model – **Use case #7.0: release of a data channel without call release**

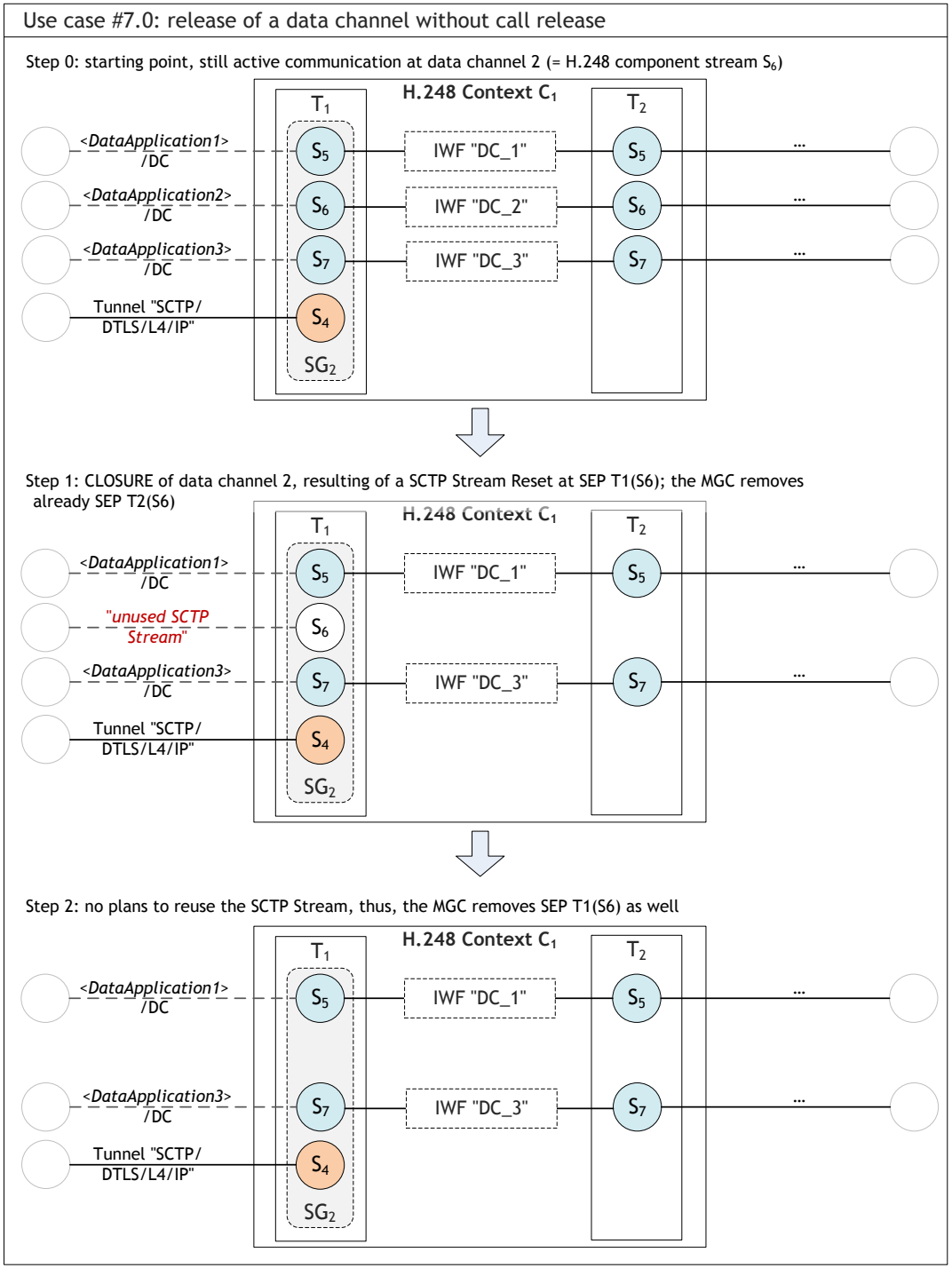

Figure 7.2

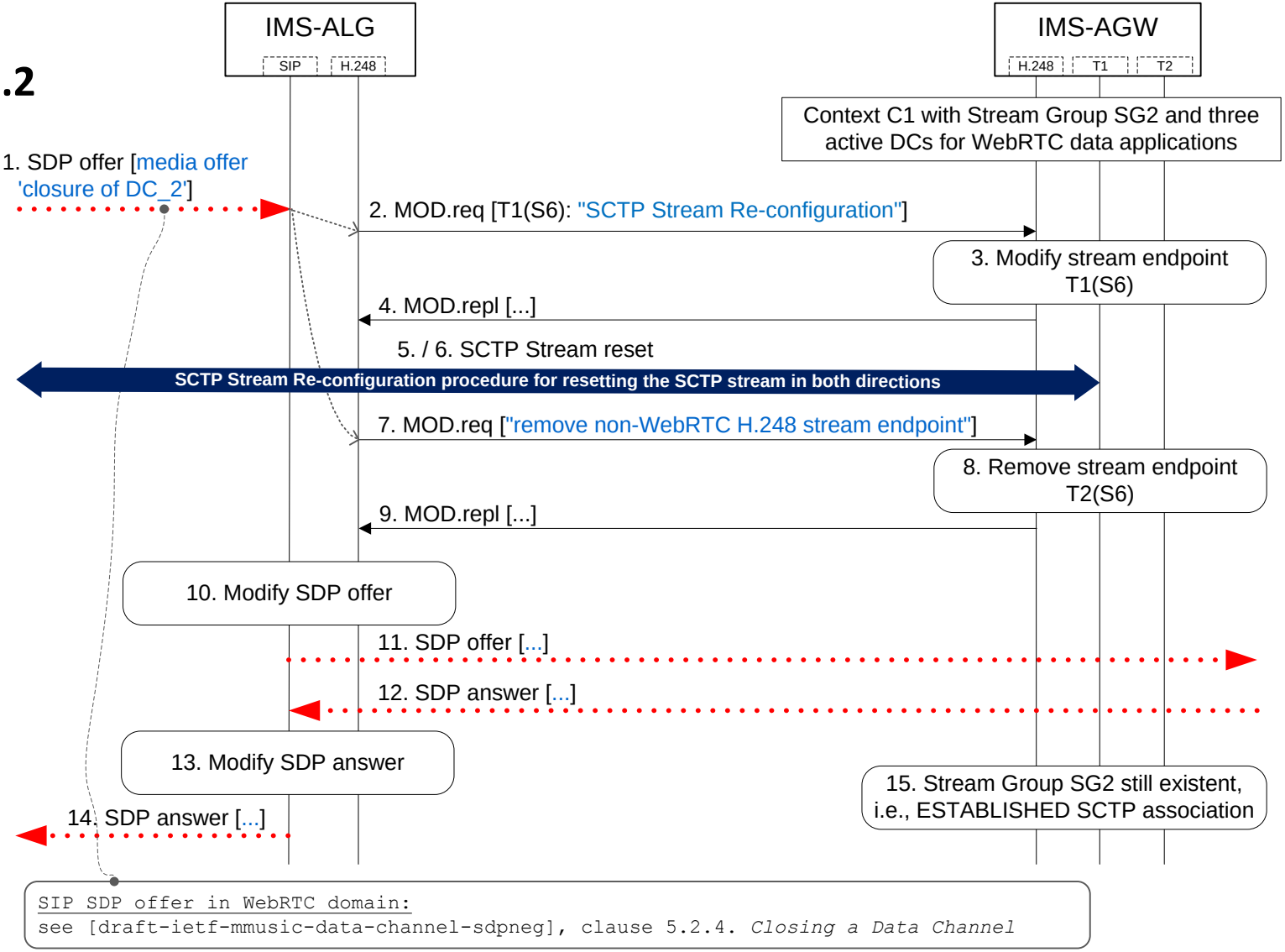

Example signalling flow for use case #7.0

Use case #8: SCTP association shutdown *without* DTLS connection release

New (WebRTC data, Rel-13)

Table 8.1 – Use case #8 and variations

UC:	Characteristic:	Comments
#8.0	• existing H.248 stream group with active data channels • closing of all data channels • subsequent shutdown of the SCTP association without DTLS connection release	• the use case demonstrates the removal of all H.248 component streams of stream group SG2, and the modification of the H.248 deaggregation stream T1(S4) (which is kept due to the still established DTLS connection)
#8.1	as #8.0 with following change: • but keeping the stream group SG2 definition, i.e., unused H.248 component streams)	• looks feasible from H.248 perspective ("a real world use case is dependent on "reuse debates" in context of WebRTC data discussions")

Figure 8.1: H.248 WebRTC gateway – H.248 Context model – **Use case #8.0: SCTP association shutdown without DTLS connection release**

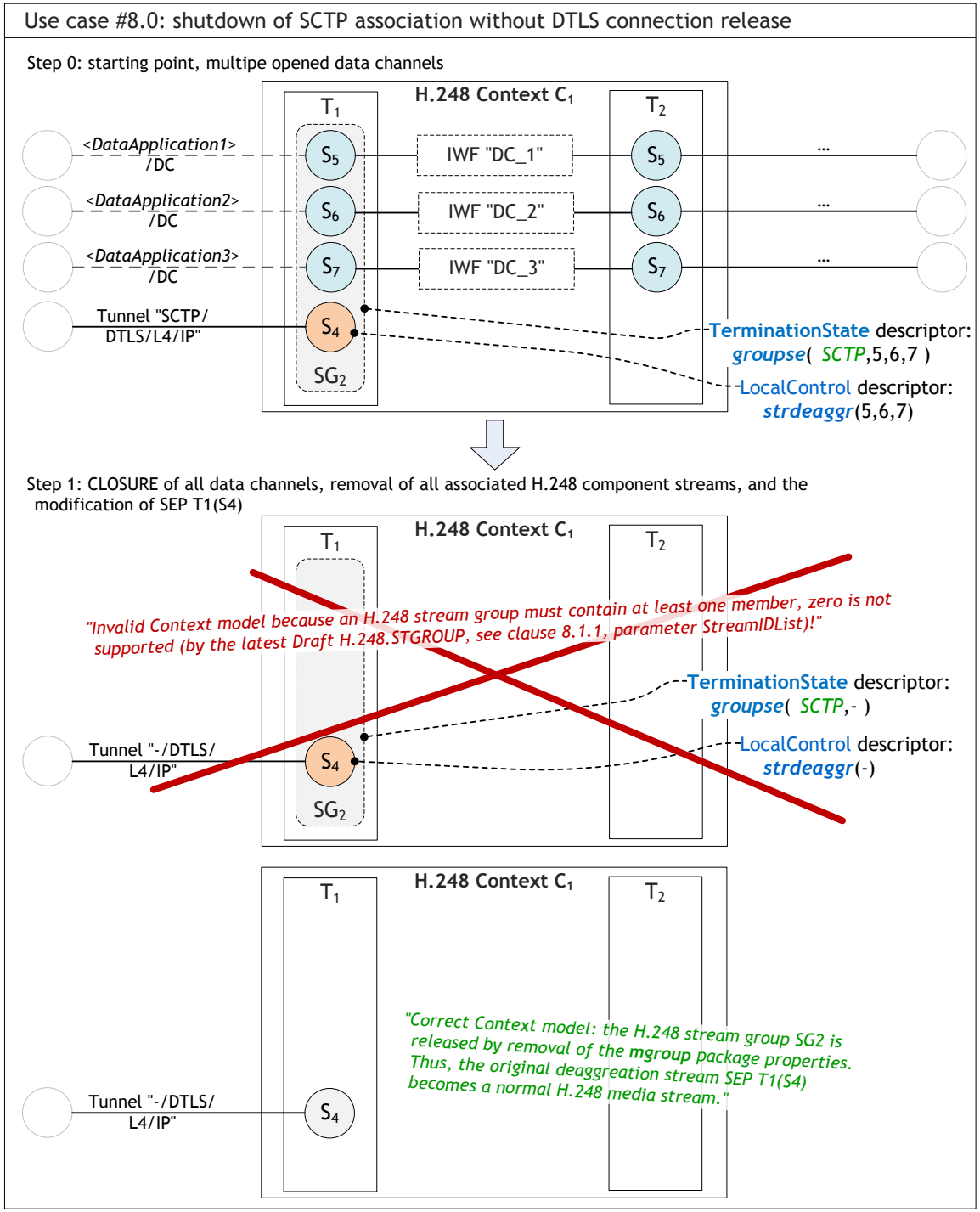

Figure 8.2

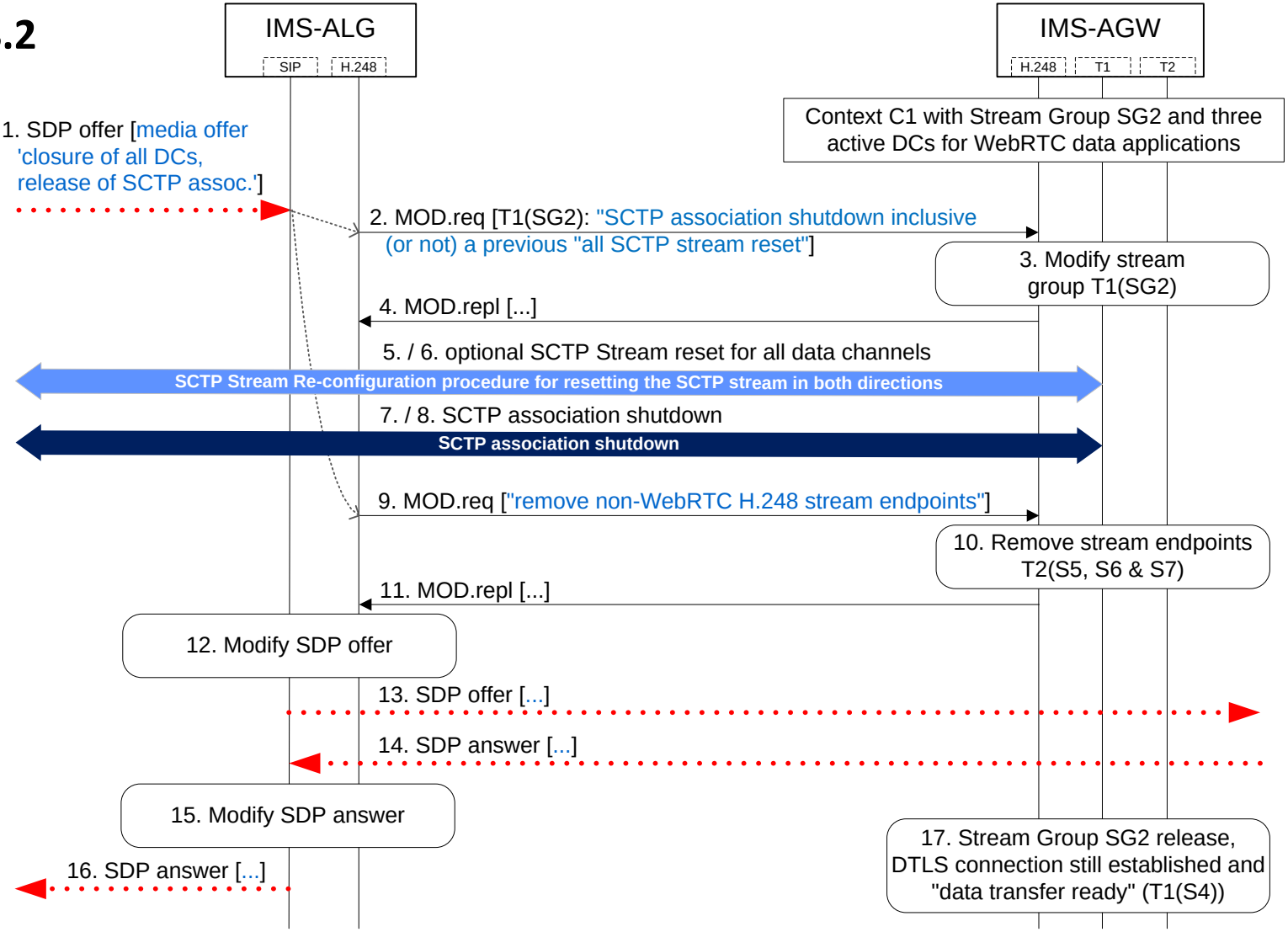

Example signalling flow for use case #8.0

Use case #9: complete call release

New (WebRTC data, Rel-13)

Table 9.1 – Use case #9 and variations

UC:	Characteristic:	Comments
#9.0	• all WebRTC data channels are closed and the underyling transport stack is completely released, but the H.248 termination isn't subtracted	• see general comments in C4-150408, clause 4.1 with respect to forced and graceful service cancellation
#9.1	as #9.0 with following change: • subtraction of H.248 WebRTC termination	• see general comments in C4-150408, clause 4.1 with respect to forced and graceful service cancellation

Figure 9.1

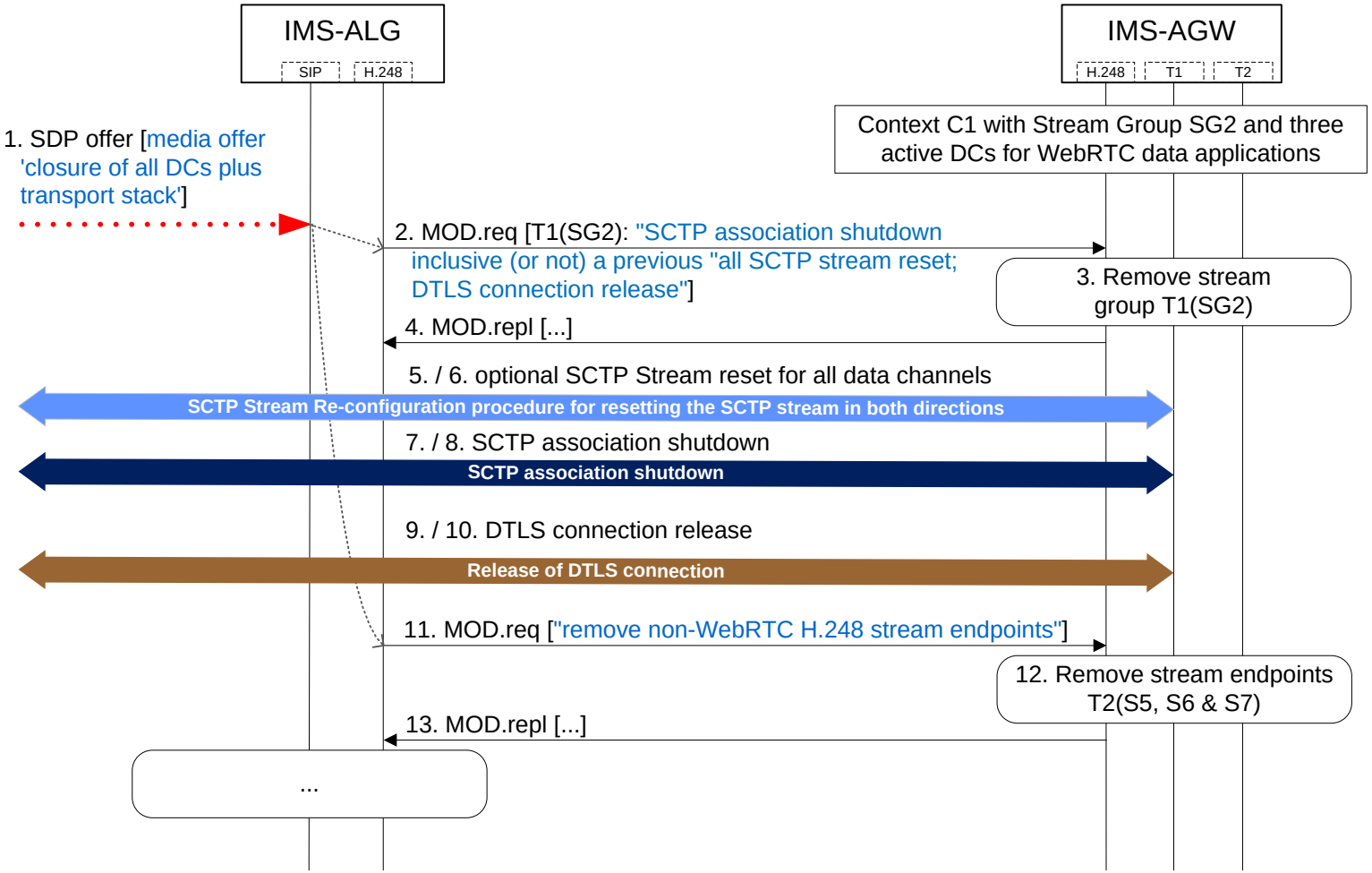

Example signalling flow for use case #9.0

Summary & conclusions

Conclusions (1/2)

Rel-13 – Support of WebRTC data channels

=> "stage 2" CRs for integration of

- primary scope:
  - establishment: use cases #3, #4 & #5
  - release: use cases #7 & #9
- secondary: enhancements based on
  - interlinkage: use case #6

Rel-13 – General completion of general WebRTC gateway service

- ICE for TCP
  - cross-check again from perspective of WebRTC data IWFs and TCP-based data services
- DTLS usage
  - DTLS capability negotiations (H.248.90, H.248.93)
  - DTLS security session maintenance (H.248.93)
- SRTP key exchange method discrimination
  - srtp package v2 (H.248.77)

Conclusions (2/2)

"H.248 WebRTC gateway" capabilities out of scope of Rel-13:

- extended stream grouping models
  - WebRTC data: see use cases #11 & #12
  - WebRTC audio & video bundling: use cases #2 (& #12)
- advanced H.248 wildcarding in "SDP lines"
  - DTLS: authentication information in "a=fingerprint" (-> H.248.39 aswp v1)
- TrGW – peering with "non-3GPP WebRTC domains"
  - WebRTC data: option of "in-band"-based DC signalling (ffs) (-> H.248.78 mcbalg v2, H.248.WEBRTC dcep v1)

Backup

Example use cases for extended stream grouping models
Use case #10: separation of SCTP association and DTLS connection

- still under evaluation, so far out of scope of Rel-13

Figure 10.1: H.248 WebRTC gateway – H.248 Context model – Use case #10: extended stream grouping "separation of SCTP association and DTLS connection"

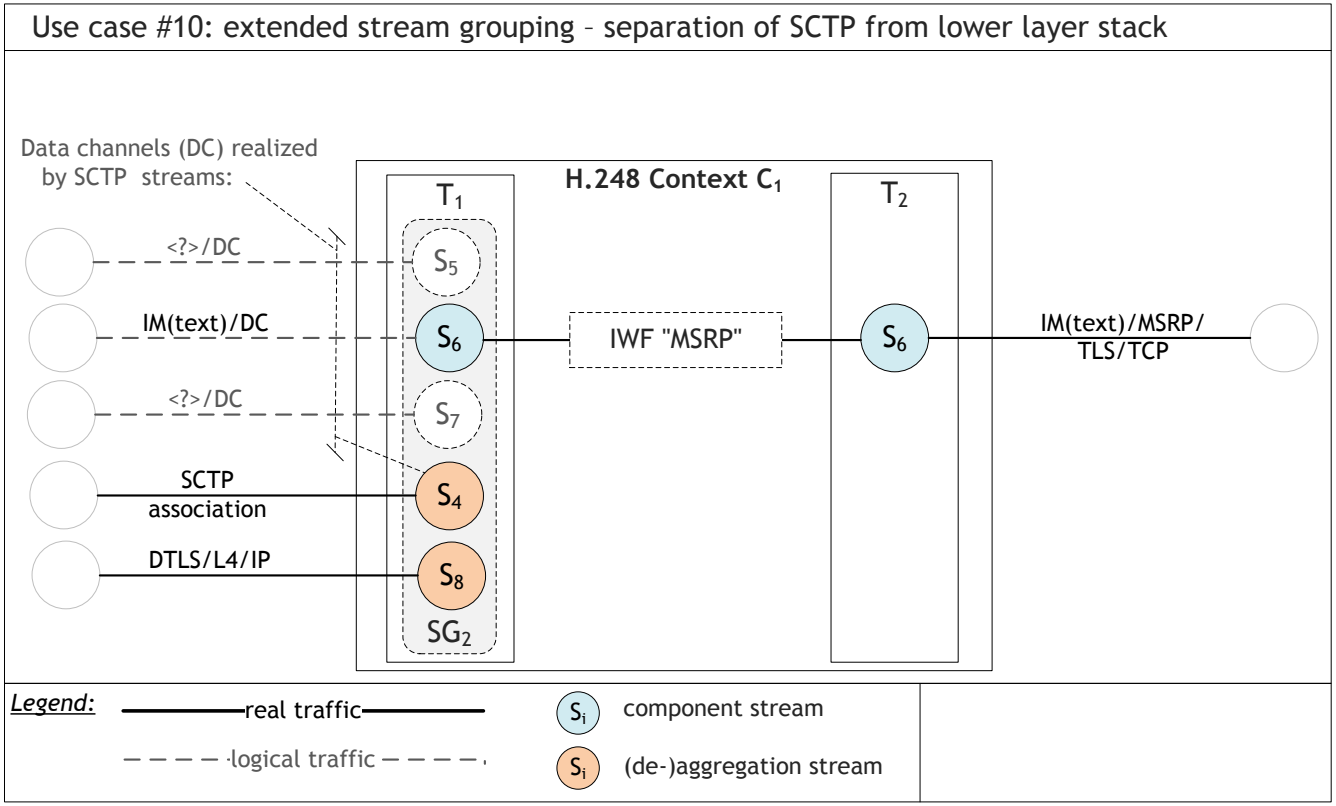

NOTE – Study item in ITU-T, see

- Draft **H.248.SCTP**, clause 11.2
- Draft **H.248.STGROUP**[I], clause L.2 and clause L.5

Example use cases for extended stream grouping models
Use case #11: separation of Layer 4 in order to isolate ICE-based L4 modifications

- still under evaluation, so far out of scope of Rel-13

Figure 10.1: H.248 WebRTC gateway – H.248 Context model – Use case #11: extended stream grouping "additional L4 separation due ICE-related (L4)-endpoint modifications during active call phase"

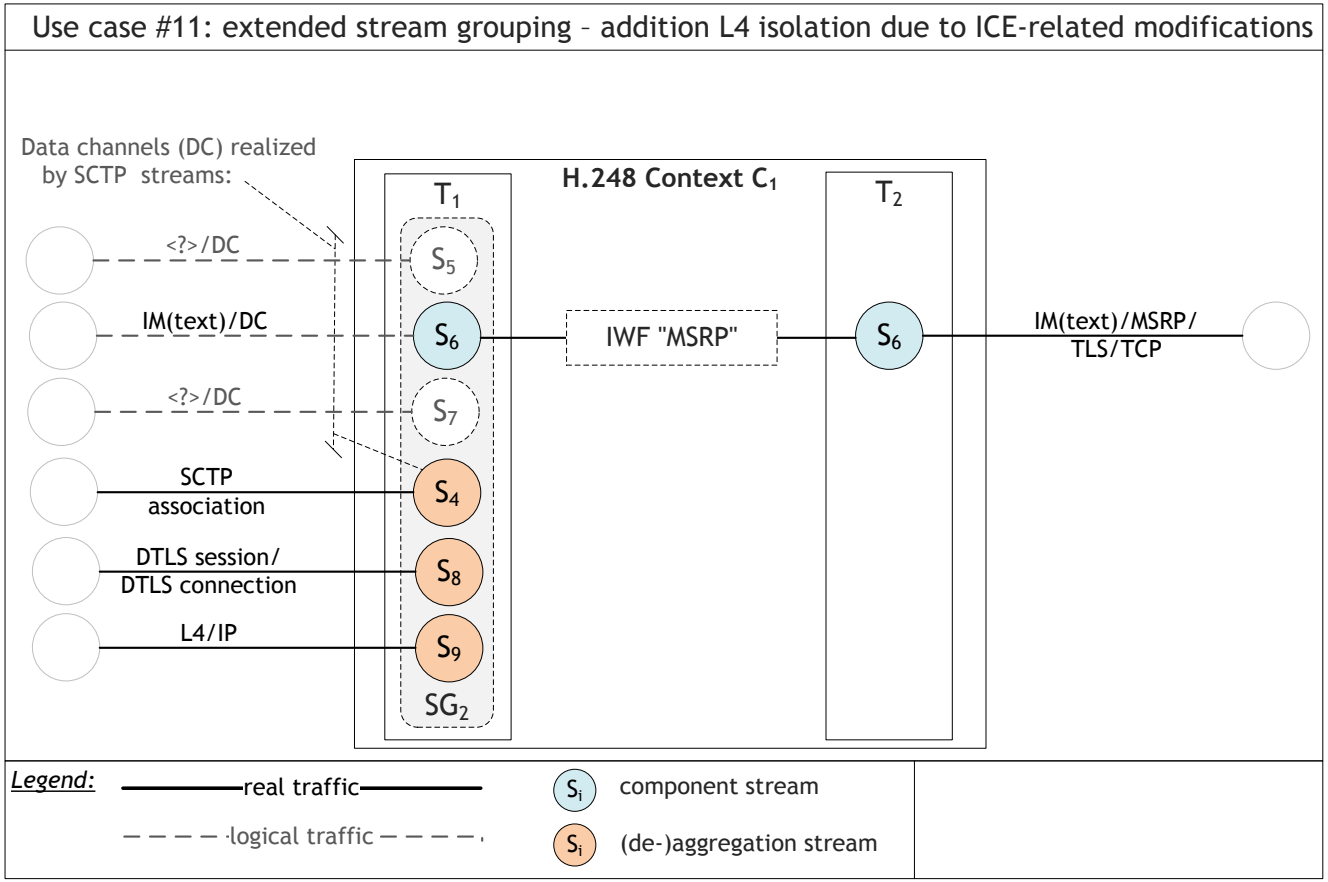

NOTE – Study item in ITU-T, see

- Draft **H.248.SCTP**, clause 11.2
- Draft **H.248.STGROUP**[I], clause L.2 and clause L.5

Example use cases for extended stream grouping models
Use case #12: WebRTC with bundled audio & video plus multiple data channels

- out of scope of Rel-13 due to 'bundling'

Figure 10.1: H.248 WebRTC gateway – H.248 Context model –

Use case #12: WebRTC with bundled audio & video plus multiple data channels

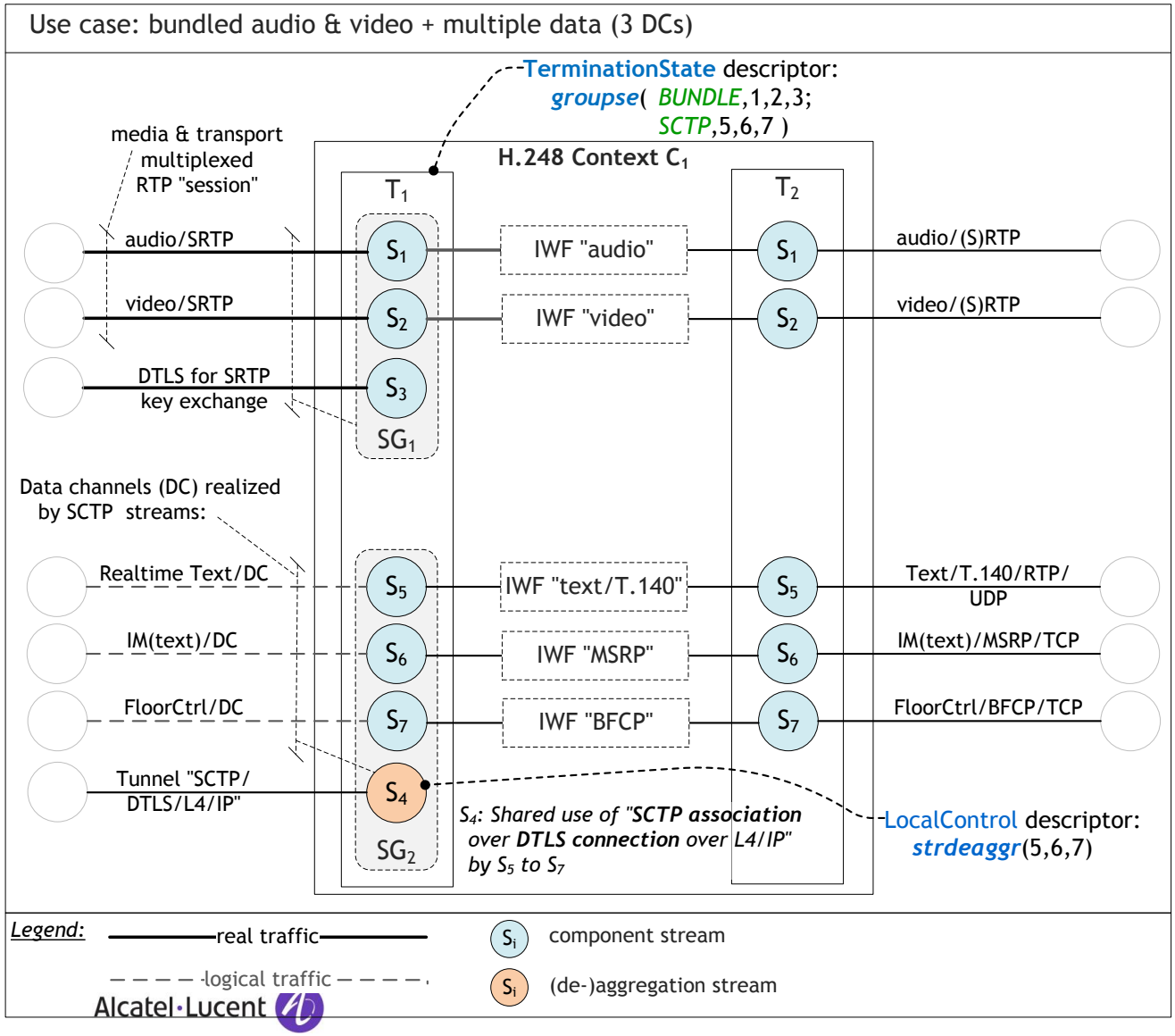

End