3GPP TSG CT4 Meeting #72bis
Ljubljana (Slovenia), 11-15 April 2016

C4-162044

ERICSSON

Discussion on Bearer Context Mismatch with Racing Conditions

Bearer Mismatch Detection (1)

- Bearer Context mismatch can be classified, from the receiver point of view, either at least one or more bearer contexts in the request message is unknown, or there is at least one or more bearer contexts is missing in the request message in comparison to the bearer contexts stored.

- Bearer Context mismatch can be detected in many procedures, e.g. during a PGW initiated Update Bearer procedure, if the Update Bearer Response message indicates one of dedicated bearer context(s) unknown by using cause code "Context not found" in the Bearer Context level. See also subclause 8.4.

- However the Modify Bearer Request/Response and the Modify Access Bearer Request/Response are commonly used as the most efficient way to detect bearer contexts mismatch.

Bearer Mismatch Detection(2)

- The Modify Bearer Request message or the Modify Access Bearers Request message shall contain all EPS Bearer Contexts for the PDN connection or for same UE, respectively.
  - The Modify Bearer Request message “shall contain all the bearers belonging to the given PDN connection” (3GPP TS 29.274 chapter 7.2.7).
  - The Modify Access Bearers Request message “shall contain all the bearers of all the existing PDN connections of the UE” (3GPP TS 29.274 chapter 7.2.24)

- The Modify (Access) Bearer Request/Response message can be also used for the synchronization of bearer contexts among EPC entities by its nature, so the allocated resource can be recycled without additional explicit signalling.

Bearer Mismatch handling

- When there are one or more **unknown** dedicated bearers in the request message, the receiving node should “partially accept” the message (unless there is some other problem with the message). In the response, the main Cause value (the Cause information element on message level) should be set to “Request accepted partially”, and for each Bearer Context in the response message the corresponding bearer Cause value should be set to either “Request accepted” for the ones known or “Context Not Found” for the ones unknown. For the those bearer contexts set with "Context Not found", the receiver of response message shall locally delete the bearer context(s).

- There is no explicit requirement that how **missing** bearers should be handled. One of most possible implementation for the receiving node is to accept the message and to locally delete any bearers that are not included in the received message. Another possibility is to reject the entire message, for example with Cause value set to “Mandatory IE missing” or “Conditional IE missing”, and with the Offending IE set to “Bearer Context” to indicate that some bearer context is missing in the request message.

Example: Bearer Mismatch as a Result of a Connectivity Problem or a Temporary Overload

- PGW receives PCC rules from PCRF, indicating that one or more dedicated bearers should be deactivated. PGW sends a Delete Bearer Request to the SGW.
- SGW forwards the Delete Bearer Request message to the MME.
- SGW does not get any response from MME. After T3-REPONSE seconds the SGW makes a new attempt to send the same message to the MME. The number of attempts depends on the parameter N3-REQUESTS.
- SGW gives up and sends a Delete Bearer Response message to the PGW, with Cause set to “Remote peer not responding”. SGW and PGW deletes the bearer(s).
- Later, when the connectivity is restored, or when the MME has recovered from a temporary overload situation, MME sends a Modify Bearer Request message to the SGW.
  SGW detects a “Bearer mismatch”.

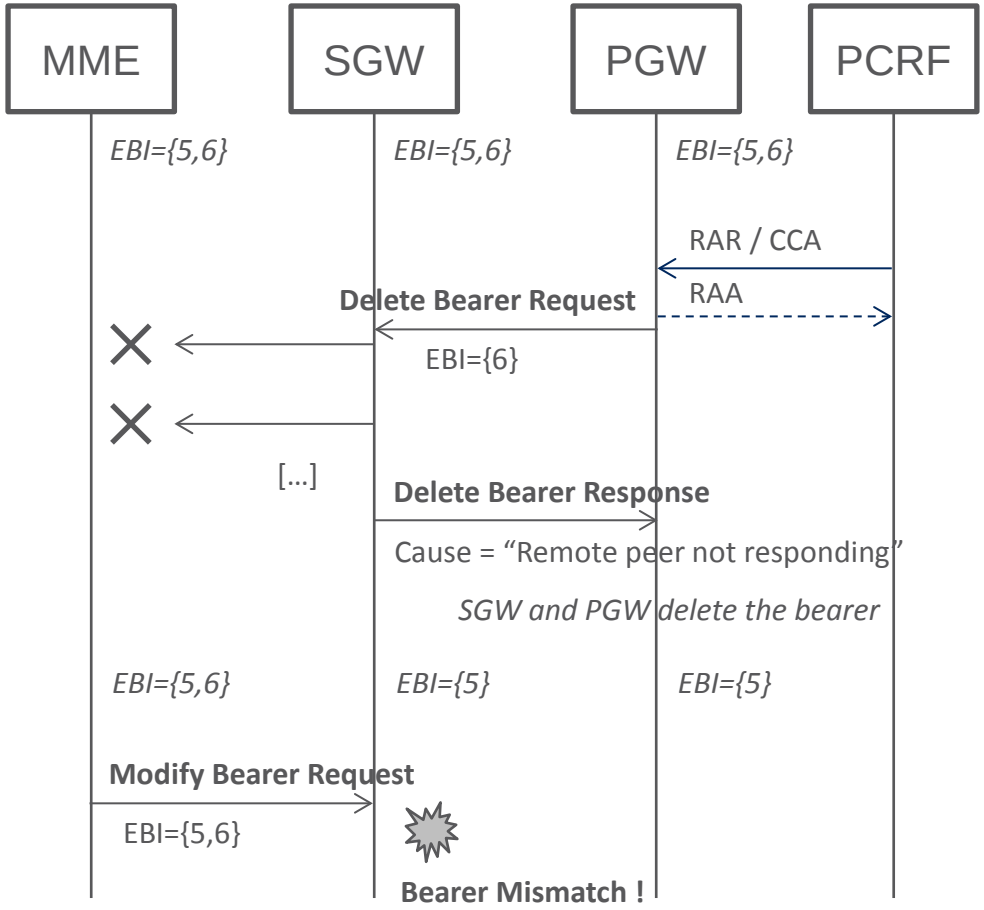

Dedicated Bearer Activation

- PGW receives PCC rules from PCRF, indicating that one or more dedicated bearers should be created. PGW sends a Create Bearer Request to the SGW. The EPS Bearer Id for each bearer will be decided by the MME.
- SGW forwards the Create Bearer Request message to the MME.
- MME allocates an EPS Bearer Id for each bearer and replies by sending a Create Bearer Response message with the new EPS Bearer Ids back to the SGW.
- SGW forwards the Create Bearer Response message to the PGW.

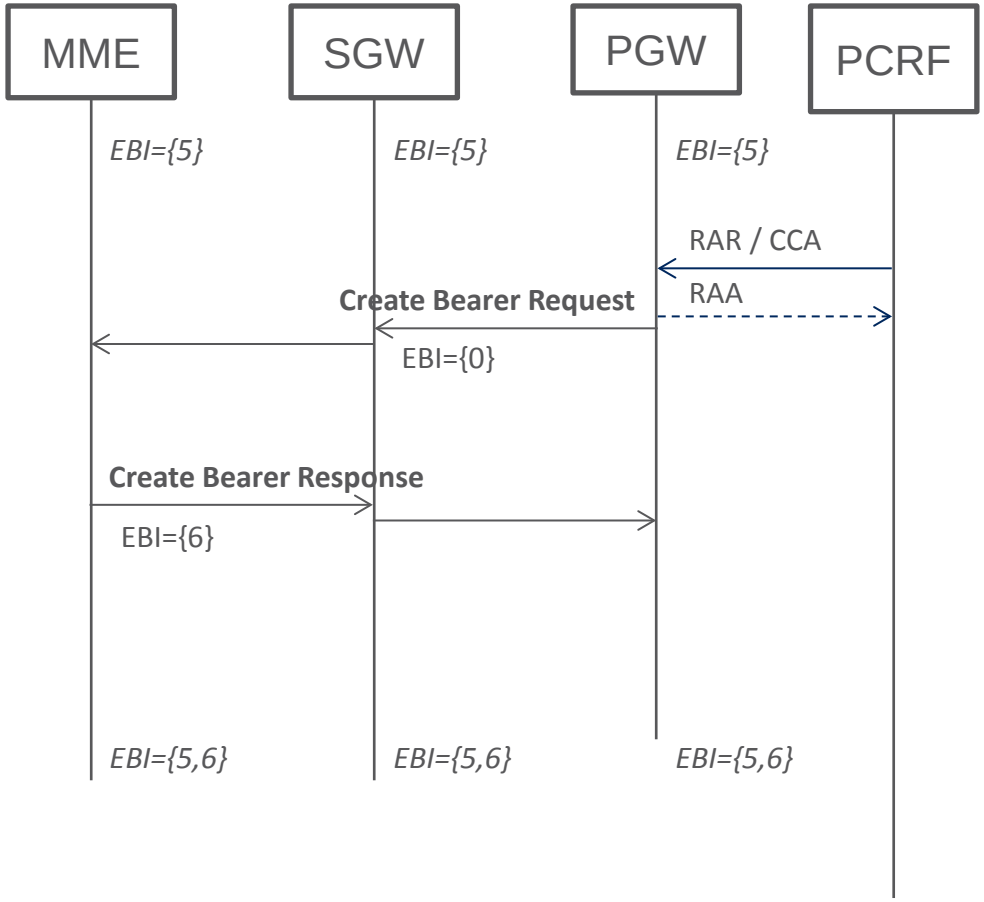

Dedicated Bearer Activation

However, as specified in TS 23.401, subclause 5.4.1:
If the UE is in ECM-IDLE state the MME will trigger the Network Triggered Service Request from step 3 (which is specified in clause 5.3.4.3). In that case the following steps 4-7 may be combined into Network Triggered Service Request procedure or be performed stand-alone.

It is not clear how to combine such dedicated bearer creation procedure into Network Triggered Service Request procedure. Is it only applicable for NAS and S1 procedure?

When it is performed separately for the corresponding NAS and S1 procedure, it is reasonable that the Modify (Access) Bearer Request/Response message for the Service Request should contain only the existing bearer contexts.

Racing Condition: Create Bearer Response and Modify Bearer Request 1(5)

- Precondition
  - Modify Bearer Request or Modify Access Bearer Request is sent from MME/S4-SGSN while a Bearer Activation procedure is triggered from PGW.
- Normal case A:
  - Modify Bearer Request arrives before Create Bearer Response.
  - Modify Bearer Request does not include the newly created dedicated bearer(s).
- At the receiving node
  - No problem.

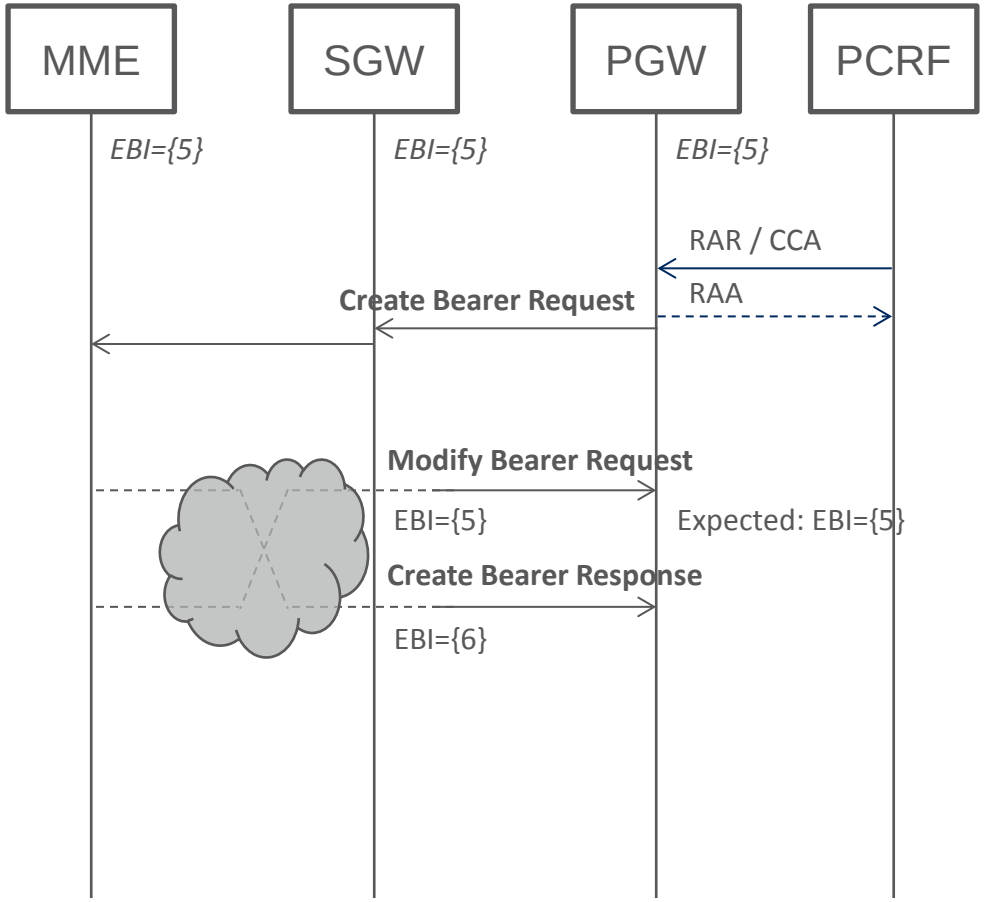

Racing Condition: Create Bearer Response and Modify Bearer Request 2(5)

- Precondition
  - Modify Bearer Request or Modify Access Bearer Request is sent from MME/S4-SGSN while a Bearer Activation procedure is triggered from PGW.
- Normal case B:
  - Create Bearer Response arrives before Modify Bearer Request.
  - Modify Bearer Request includes the newly created dedicated bearer(s).
- At the receiving node
  - No problem.

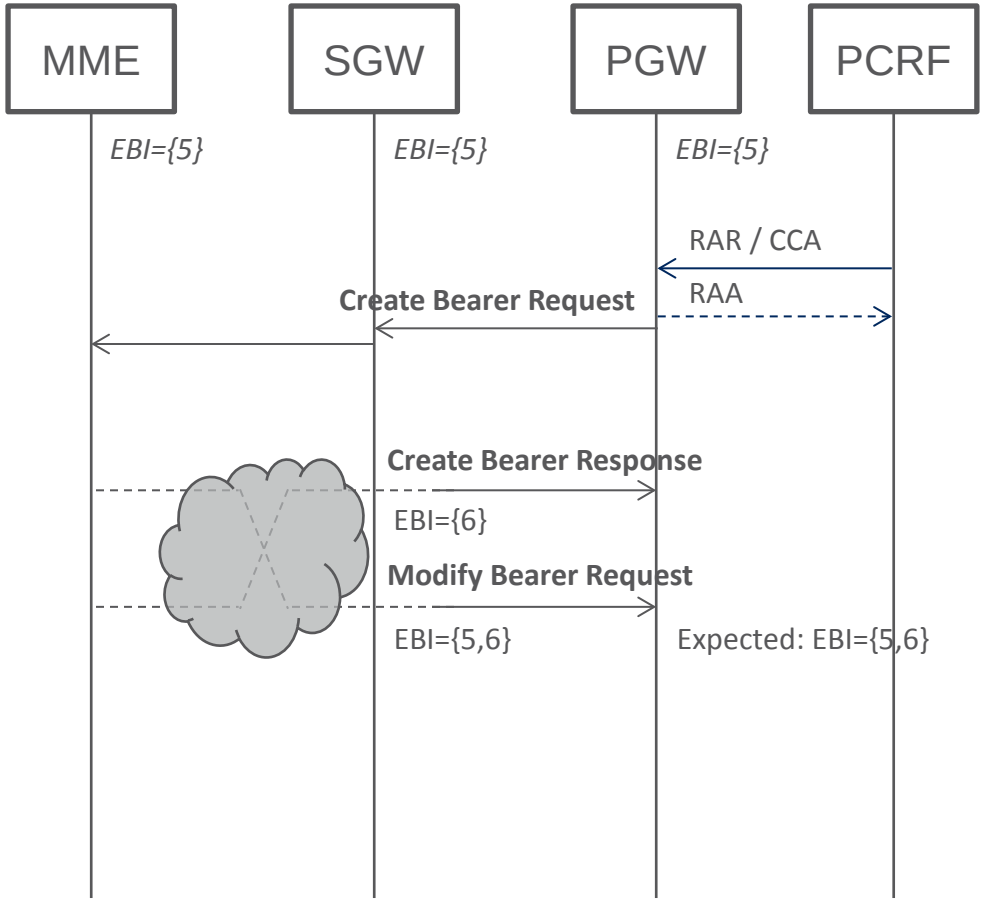

Racing Condition: Create Bearer Response and Modify Bearer Request 3(5)

- Precondition
  - Modify Bearer Request or Modify Access Bearer Request is sent from MME/S4-SGSN while a Bearer Activation procedure is triggered from PGW.
- Exceptional case A:
  - Modify Bearer Request arrives before Create Bearer Response.
  - Modify Bearer Request includes the newly created dedicated bearer(s).
- At the receiving node
  - From the receiving node's point of view the received Modify Bearer Request message contains one or more unknown bearers.

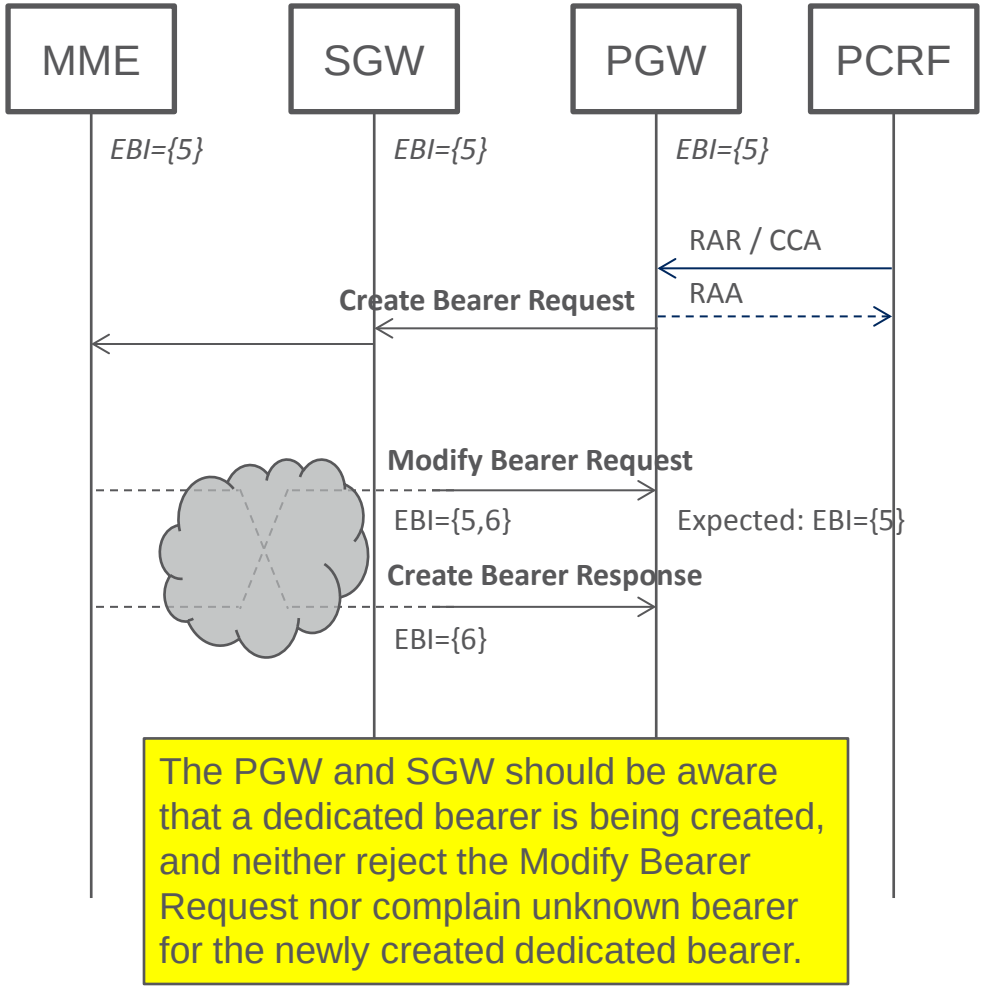

Racing Condition: Create Bearer Response and Modify Bearer Request 4(5)

- Precondition
  - Modify Bearer Request or Modify Access Bearer Request is sent from MME/S4-SGSN while a Bearer Activation procedure is triggered from PGW.
- Exceptional case B:
  - Create Bearer Response arrives before Modify Bearer Request.
  - Modify Bearer Request does not include the newly created dedicated bearer(s).
- At the receiving node
  - From the receiving node's point of view one or more bearers are missing in the received Modify Bearer Request message.

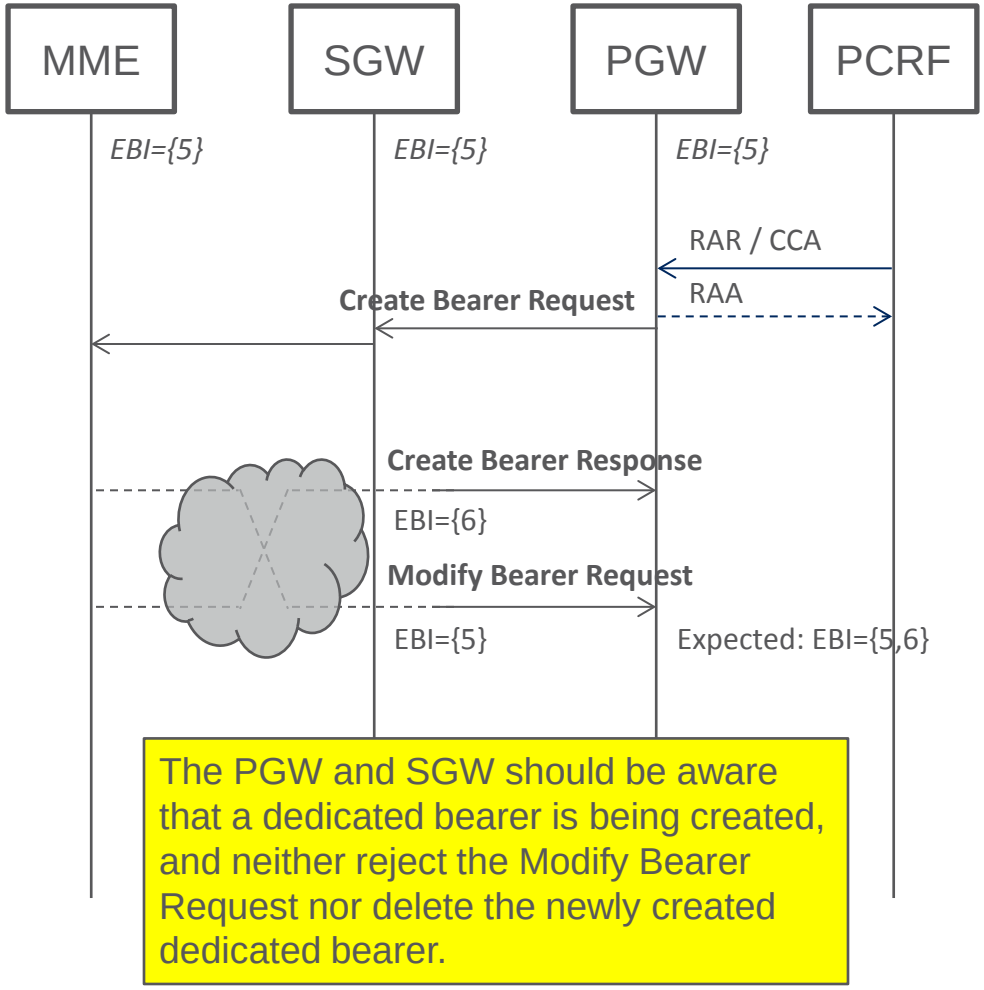

PROPOSED SOLUTION

1. Upon sending/receiving Create Bearer Request, the MME/SGW/PGW starts a configurable timer. While the timer is running, the SGW / PGW should accept the received Modify (Access) Bearer Request even with bearer mismatch and not deleted any missing bearers. The MME should not delete any new dedicated bearer(s) unknown by peer indicated in the Modify Bearer Response message.
2. The timer either expires or stops at receiving the first Modify (Access) Bearer without any bearer mismatch. After that, the MME/SGW/PGW should treat Modify (Access) Bearer Request/Response normally.
3. The MME/SGSN should include only the existing bearer contexts in the Modify (Access) Bearer Request message during the Network Triggered Service Request procedure, where the procedure is triggered by a dedicated bearer creation procedure.

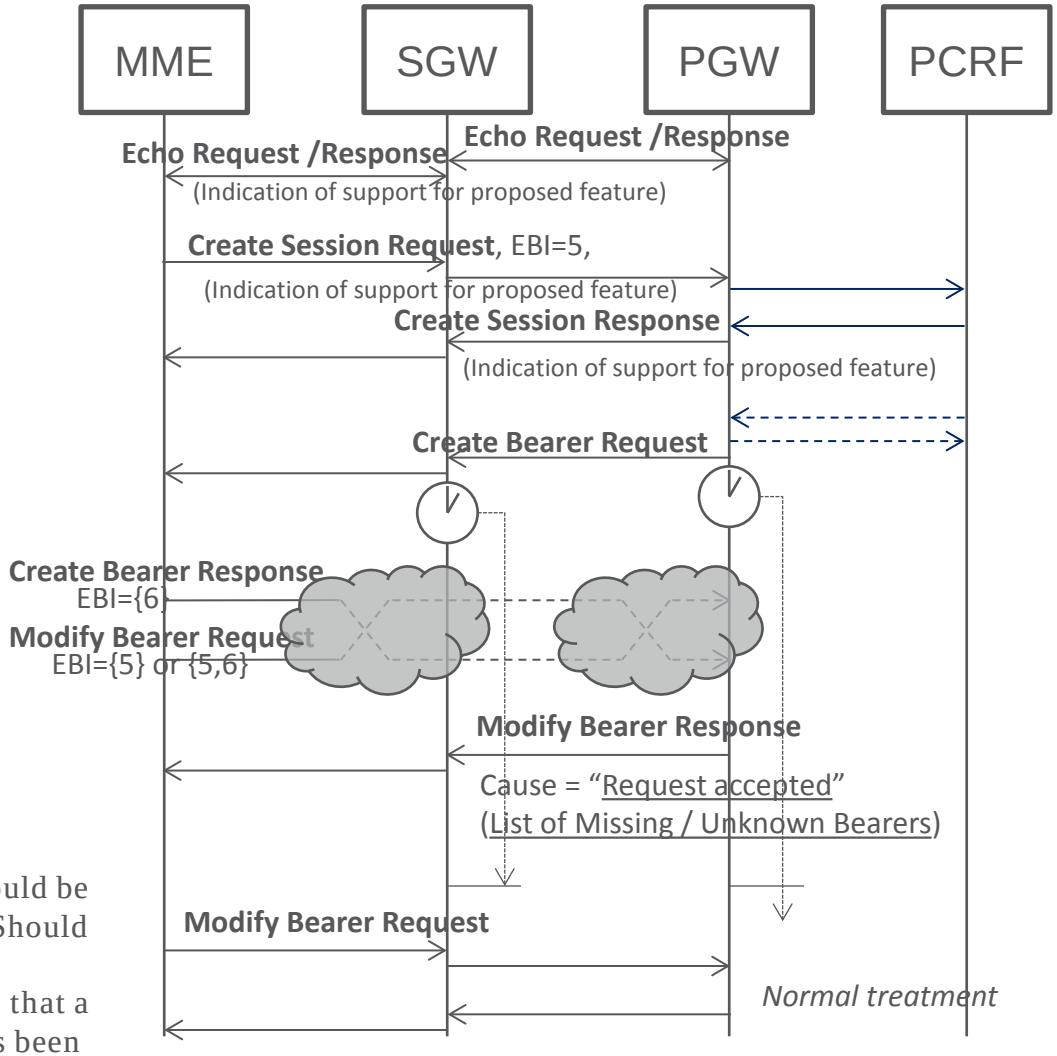

Besides, up to CT4 decision:

1. Whether such capability to support such timer should be exchanged among MME/SGSN, SGW and PGW? Should set the timer as implementation specific?
2. Whether it should be reported to the MME/SGSN, that a mismatch is detected but the M(A)BR message has been accepted.

ERICSSON