ETSI/SMG

Issued by: ETSI PT12

Date: April 1993

Recommendation: GSM 03.45

Title:

TECHNICAL REALIZATION OF FAX GROUP 3 - TRANSPARENT

List of contents:

0. SCOPE

1. SERVICE DEFINITION

2. NETWORK ARCHITECTURE

3. REFERENCE CONFIGURATION AT THE MOBILE STATION

4. CONNECTION TYPES

5. USE OF TERMINAL ADAPTATION FUNCTIONS

6. SIGNALLING ASPECTS

7. INTERWORKING TO FIXED NETWORKS

ANNEX
References, definitions, abbreviations

APPENDIX
I Protocol entities from CCITT T.30 and T.4
II Procedure examples

Original Language: English

Number of pages: 39

0. SCOPE

This Specification deals with the procedures allowing the technical realization of the Group 3 facsimile Service within the GSM PLMN using transparent Network support, according to the definition of Teleservice 61 and 62 specified in the TS GSM 02.03.

1. SERVICE DEFINITION

The fixed network Group 3 Facsimile service, as basically defined in CCITT Recommendation F.160, is an international telematic service for ISO A4 document transmission between two facsimile stations.

The service specification is comprised of two parts: the control protocol described in CCITT Recommendation T.30, and the document transmission coding described in CCITT Recommendation T.4.

The GSM facsimile Teleservice is intended to allow facsimile connections between group 3 apparatus using:

- a GSM PLMN as a stand alone facility, for mobile to mobile communication;

- a GSM PLMN to gain access to fixed networks PSTN and ISDN,for mobile to/from land communication.

For this Teleservice, the document coding is as CCITT Recommendation T.4 with no modifications. The protocol used is CCITT Recommendation T.30 modified within the PLMN as detailed in this Specification.
The interworking between different networks is based on CCITT Recommendation X.300.

The particular features of this Teleservice are:

- it uses point-point communication;

- the information transfer capability is dual "Speech"/"Group 3 Facsimile" for Teleservice 61 and "Group 3 Facsimile" only for Teleservice 62;

- both mobile originated and terminated calls are supported;

- the information transfer mode is circuit, duplex, synchronous and symmetric;

- different end-to-end transfer rates are used within the same call to take advantage of the better radio path error rate;

- use of a standard synchronous terminal adaptation function (as per TS GSM 07.03) within the MS.

2. NETWORK ARCHITECTURE

The network architecture applicable to this Teleservice is shown in Fig 1/03.45, below.

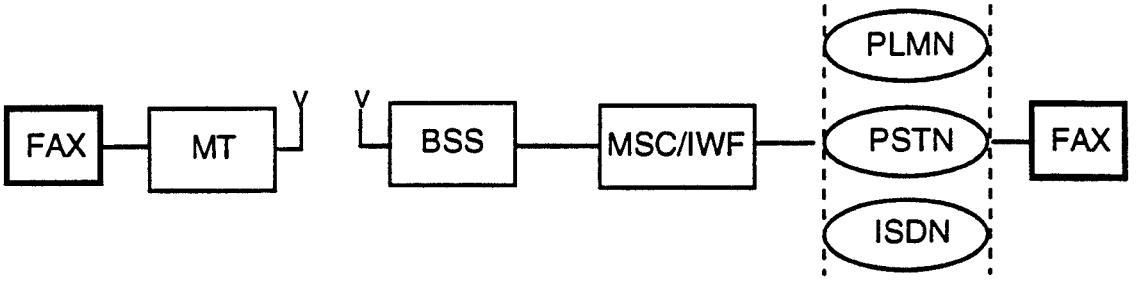

Fig. 1/03.45 Network architecture

This shows the case of mobile to fixed network interworking. For mobile to mobile calls, there would effectively be a loop back within the PLMN, using two IWFs.

3. REFERENCE CONFIGURATION AT THE MOBILE STATION

The mobile reference configurations described in this section are defined as per TS GSM 04.02.

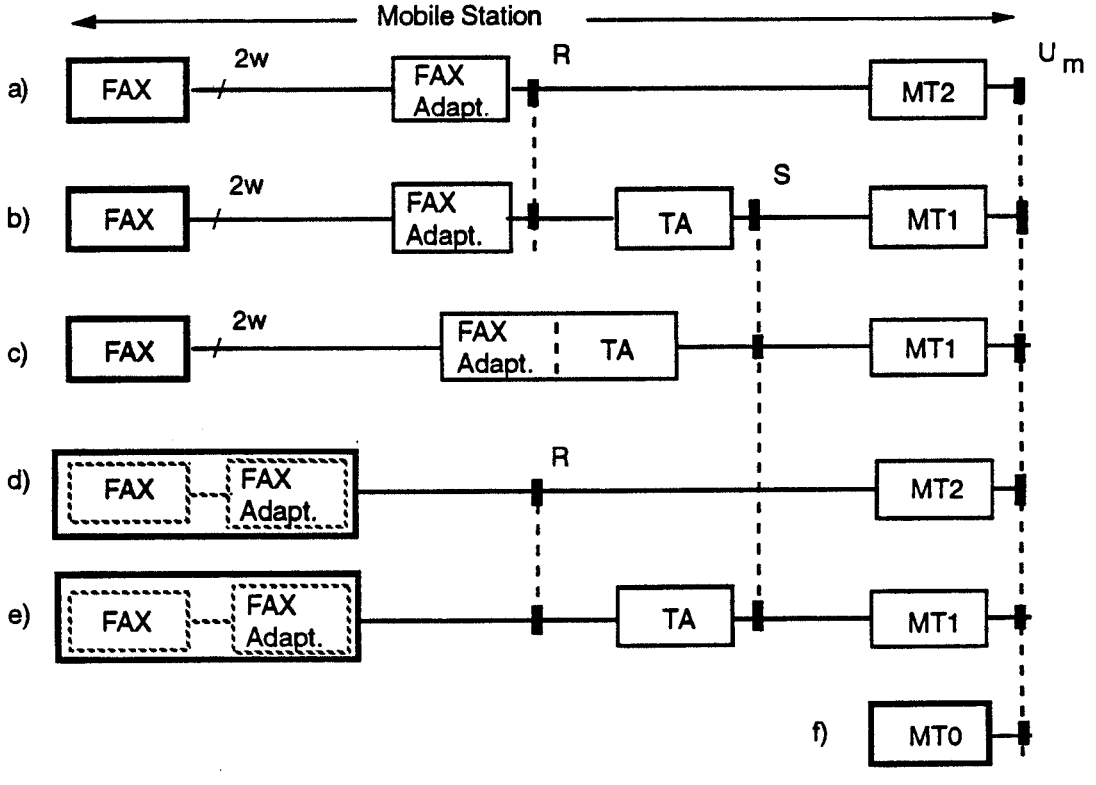

Fig. 2/03.45 Reference configurations

The Teleservice definition in TS GSM 02.03 regards the group 3 facsimile terminal as a 2-wire analogue terminated equipment.In order to connect this to the MT2 a separate "Fax Adaptor" device is necessary.
This configuration, shown in Fig. 2a/03.45, has to be considered as the standard configuration, so that all the existing Group 3 facsimile apparatus can be connected to the PLMN.

An alternative realisation would be to combine a standard group 3 facsimile machine and the Fax Adaptor into a specially developed "GSM facsimile machine", directly providing a digital output.
Although such a device must appear to the MT2 as identical to the Fax Adaptor (i.e.with an identical interface and protocol), it would allow for a significantly smaller and simpler facsimile machine.
This configuration is shown in Fig 2d/03.45 and is regarded as a desirable alternative.

In addition of course, it is always possible to realise an MT0, as per Fig 2f/03.45, where both the facsimile and mobile termination functions are considered to be part of one integrated unit.

The remaining configurations concern the use of an S interface and are considered as optional configurations.
Their use is for further study.

The particular terminal adaptation functions used are those detailed in TS GSM 07.03 and the interface to the MT2 used is synchronous V.24 with an option for support of V.25bis procedures for autocalling and autoanswering.

3.1 Fax Adaptor functionality

The Fax Adaptor block, Fig. 3/03.45, is intended to specifically complement the Group 3 facsimile apparatus in order to be able to communicate over a GSM PLMN.

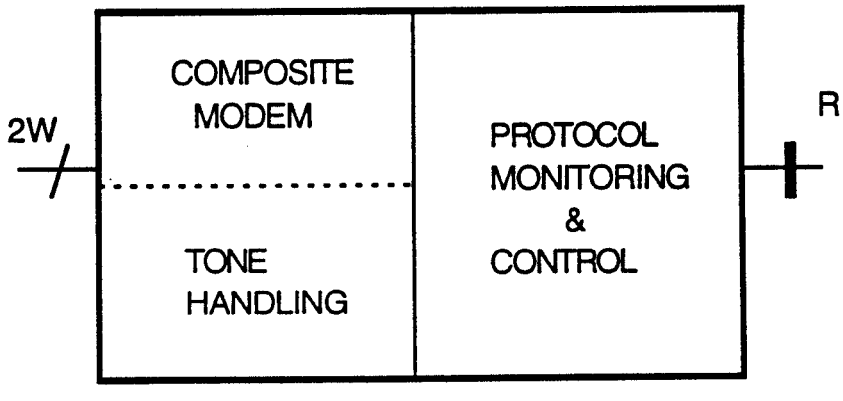

Fig. 3/03.45 Fax Adaptor scheme

Whether it has to be a function internal to the GSM PLMN, or an external accessory associated with the Group 3 apparatus, is beyond the scope of this Specification, and in any case, does

not affect at all the working of the procedure as here described.
It can be functionally partitioned in two sections:

- an analogue section, dealing with:

  * the modulation and demodulation processes according to CCITT Recommendation V.21, V.27 ter and V.29 as explained in T.4 and T.30;

  * handling of the signalling on the 2-wire path to the facsimile machine, including autocalling and autoanswer functions where necessary (see section 6).

- a digital section, dealing with:

  * monitoring and where necessary, manipulation of the T.30 protocol as detailed in the rest of this Specification;

  * overall control of the adaptor;

  * connection over the synchronous V.24 interface to the MT as described in TS GSM 07.03;

  * where necessary, autocalling and autoanswering functions according to V.25bis.

In the following this specification will reference the Fax Adaptor functionality, considering the most general case where it operates as a full-featured (see Fig. 3/03.45) separate block (see Fig. 2a/03.45), as this reference configuration is implicitly or explicitly exhaustive of all service related technical aspects.

3.2 GSM Facsimile Machine functionality

The special GSM facsimile machine shown in the MS configuration of Fig 2d/03.45 has a similar functionality to the digital part of the Fax Adaptor, but without any of the analogue portions.
It appears over the V.24 interface as identical to the Fax Adaptor, i.e. the MT2 needs to have no knowledge of the particular configuration used.
When necessary this reference configuration, will be explicitly referenced to in the following; otherwise all technical aspects relevant to the configuration implicitly apply.

4. CONNECTION TYPES

Table 1/03.45 shows the connection elements attributes applicable to this Teleservice(*), adapted from TS GSM 03.10.

(*) Teleservice 61 includes both speech and data connection types, but Teleservice 62 only the data connection type

Protocol type of fig.6 TS GSM 03.10	Access to TAF of the Mobile Station	Radio interface connection element	Intermediate rate RA1 to RA2	BS-MSC/IWF connection element
Model 6:Speech	----	Speech/GSM	----	CCITT A-law
Model 5: Facsimile Group 3	C/D/S UDI - 9.6kbit/s - 4.8kbit/s - 2.4kbit/s (**)	C/D/S UDI - 12.0kbit/s - 6.0kbit/s - 3.6kbit/s	C/D/S UDI - 16kbit/s - 8kbit/s - 8kbit/s	C/D/S UDI - 64kbit/s - 64kbit/s - 64kbit/s

C = Circuit switched S = Synchronous
D = Full-duplex UDI = Unrestricted Digital Information

Table 1/03.45 Elements of connection types

The Fig. 4/03.45 shows the scheme of a typical GSM PLMN connection for this Teleservice, considering respectively R and S access at Network Termination.

To grant full support to the CCITT Rec. T.30, requiring different transmission speeds, the following strategy shall be implemented:

- PLMN provides for three Access Rate only, that is 9600 bit/s, 4800 bit/s, 2400 bit/s;
- radio channel modification procedures are used for switching between Speech phase and facsimile phase, as well as to select the suitable Access Rate (9600/4800/2400 bit/s) within the facsimile phase, as resulting from the preliminary end-to-end negotiation between the terminals;
- to transport Binary Coded Signaling (BCS) requiring a synchronous 300 bit/s bit-rate, speed conversion will be used at both the PLMN ends.

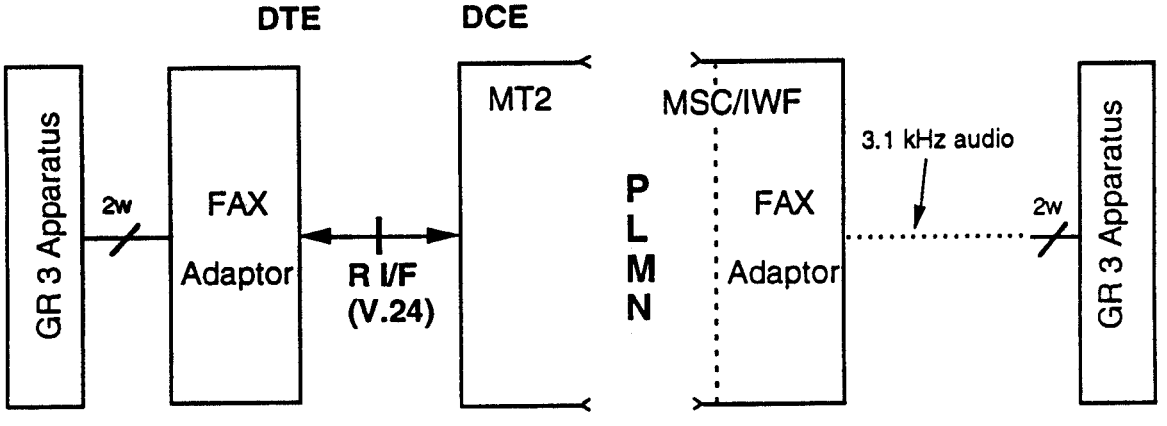

Fig. 4a/03.45 Standard Teleservice connection

(**) The highest Access Rate actually supported in this Teleservice will be consistent with the highest Transparent Bearer Service provided by the Network Operator, according to the classification ('E3'/'A') fixed in GSM Rec.02.02.

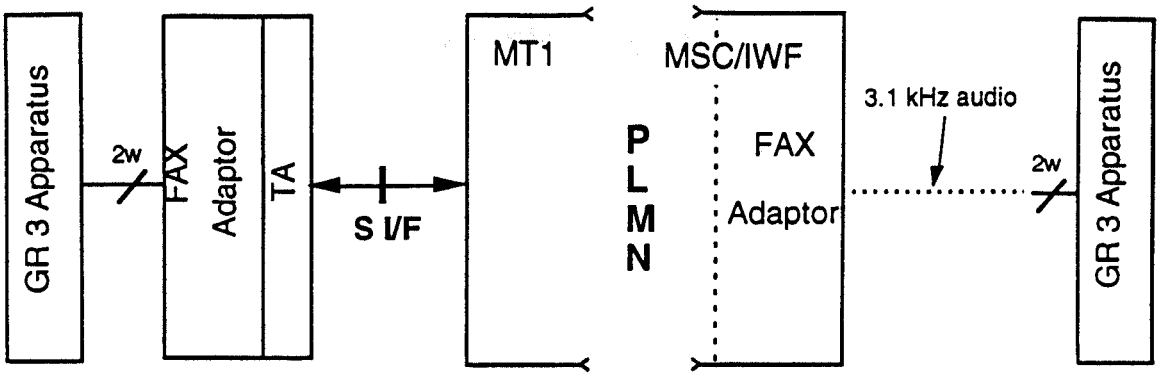

Fig. 4b/03.45 Optional Teleservice connection (F.F.S)

4.1 Information transfer protocol model

The Fig. 5/03.45 depicts the protocol model for this Teleservice, deduced from model 5 of Fig. 6/03.10.

The main point to be underlined is that all the protocol modules specific for this Teleservice are confined in the Fax Adaptation functions at both the MT and IWF ends.

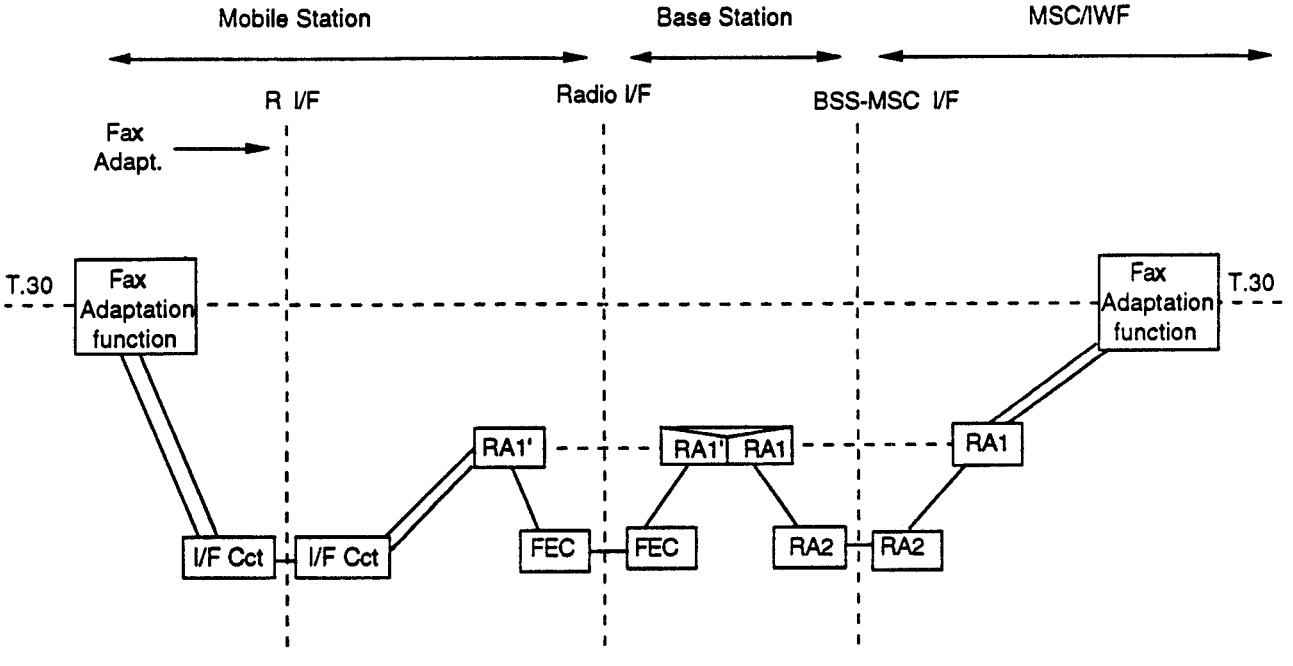

Fig. 5/03.45 Information transfer protocol model

4.2 Interactions with T.30

The philosophy of this Specification is to allow the T.30 protocol to pass transparently wherever possible, through the Fax Adaptors at both ends of the PLMN channel.
Manipulations are only made to the protocol where necessary to overcome problems resulting from the differences between the PSTN and the GSM system.
Basically, these problems fall into four categories:

- supporting facsimile on a digital connection type;

- bit errors during transfer of BCS frames;
- the need to change speed to reduce the impact of bit errors during transfer of Fax encoded Messages;
- inability to support some features of T.30.

4.2.1 Link control strategy

Though the T.30 procedure is plain half-duplex, between the FAs at both the GSM PLMN ends a full-duplex mode connection will be established. Information transfer is structured in fixed length blocks, carrying either data received from the local modem, or idle synchronization patterns.

Establishment, maintenance and release of the data circuit is performed autonomously by each FA, by properly handling the physical interface to its local modem.

Due to the rigid timeout constrains in T.30 protocol procedure, which will be actually concatenated to the procedure defined here for the GSM connection part, a strictly forward-only approach is adopted for data link control; that is no retransmission means are explicitly introduced to recover corrupted information blocks.

Although in the majority of cases the T.30 protocol can take care of lost frames and easily recover, there are some particularly critical points where two consecutive segments in the procedure, without any interposed acknowledgement, require different transmission speeds (BCS speed/Message speed).
In these cases, to grant that a correct change-over from one modem type to another takes place at both the PLMN ends, some additional protection is necessary in the GSM environment.
This protection, actually at the beginning and at the end of the Fax page transmission, is given by means of a confirmation mechanism, whereby the originating FA waits while transmitting a fixed pattern until an explicit acknowledgment is received from the terminating FA. In these cases an interruption of the normal T.30 information flow may eventually result.

Aiming at minimizing any possible delay in the end-to-end transmission between the two facsimile apparatuses, the FAs will pass on information without error control of the message integrity (*).
To this regard, however, it is worth underlining that an essential requirement in this procedure is the detection of some key messages exchanged between the terminals, carrying basic control information. Hence, in parallel to the primary information passing process, a continuous monitoring of the information flowing across the FA is necessary, to detect these messages, fully checked in their logical integrity.

(*) All V.21 modems in the FAs shall use the faster response time provided by CCITT Rec. V.21 (see Table 2/V.21) for OFF to ON transition of CT109 and CT106.

In addition, as detailed below, some fields in some frames may need to be changed.

4.2.1.1 Message detection

While in BCS, the following frames have to be detected:

- DIS/DTC, to monitor all operational parameters proposed to the sender terminal by the receiver terminal;

- DCS, to realize (see Table 2/T.30) the actual message transmission speed accepted by the sender terminal;

- NSF, to inhibit Non-Standard Facilities, if explicitly required by the user Fax Adaptor configuration;

- DCN, to initiate the Call release procedure.

During the Message phase (C phase of T.30) a single bit pattern has to be detected, the EOL character, a unique codeword that can never be found within a valid line of Fax coded Data (see CCITT Rec. T.4, section 4.1.2), and therefore used to control the buffer level in each FA, as detailed in the following section 5.2.6.

4.2.2 Speed conversion for BCS phases

Given the signalling load caused by the Channel Mode Modify procedure, rather than changing the radio channel speed to 300 bit/s to carry the BCS frames, a speed conversion mechanism is exploited at both the PLMN ends, allowing to maintain the Channel rate of the Message phase (9600/4800/2400 bit/s) during BCS phases.
A speed conversion factor can be defined as:

$$\frac{\text{Fax Message speed (9600 or 4800 or 2400 bit/s)}}{\text{Standard BCS speed (300 bit/s)}}$$

which will assume the value 8 or 16 or 32, depending on the actual Message speed negotiated between the terminals.

In the originating FA up-conversion to Message speed will be performed on the basis of a plain "n times" repetition algorithm.

In the terminating FA, down-conversion to the BCS speed will require a "by n" decimation algorithm; this algorithm is assumed implementation dependent, and hence its actual definition is beyond the scope of this Specification.

As the actual Access Rate over the GSM-TCH may change throughout the Call, speed conversion factor needs to be updated in both FAs.
The FA/IWF will update this value upon successful completion of a CMM procedure (see 4.3.2 below).

The FA/MT which does not have direct access to the GSM signalling channel (except for MT0 configuration), shall estimate the actual Access Rate established over the GSM-TCH from the effective Access Rate of the MT data interface (or any other means in case of MT0); this check shall be performed whenever a BCS frame is sent towards the Radio path after which a change for GSM-TCH Access Rate may be expected (e.g., DIS and DCS frames for Normal Fax mode, PPR and CTC frames for Error Correction Mode).

4.2.3 Compatibility checking

Some features of T.30 cannot be supported in the GSM PLMN environment.
Fax Adaptation function is in charge of dealing with such compatibility checking.

4.2.3.1 Group 1 and Group 2 support

Group 1 and Group 2 equipments are not supported by the Teleservice as described in this Specification.
To this purpose, any tonal signalling specific to the above kind of Fax apparatus will be ignored by the Fax adaptation function at MS and IWF.

4.2.3.2 2400 bit/s handshaking

Only standard 300 bit/s Binary Coded Signalling is supported.
To this purpose the FA will ignore this capability within the B segment of T.30 procedure, looking for DIS frame, by default, from V.21 modem only.

4.2.3.3 Non-standard facilities

Non-standard facilities are supported in so far they are not in conflict with the standard procedure described in this GSM Specification.
All the relevant BCS frames are passed end-to-end, unless an explicit deletion is required by the user (e.g. by a specific input at the Fax Adaptor associated with the Mobile Station). In this case, upon detection (see section 4.2.1.1) of the NSF frame identifier (the Facsimile Control Field octet according to T.30 terminology), the whole HDLC frame shall be stripped and replaced by a GSM specific NSF frame, containing a Country Code and a unique identification of the FA manufacturer, encoded as per CCITT T.35 and according to national regulations; the Information field of this NSF frame shall have a maximum length of 6 octets, and shall not require any specific functionality in the PLMN.

4.2.3.4 7200 bit/s Facsimile Document Transfer

End-to-end transfer of T.4 information at 7200 bit/s can be supported, even if this Bearer Service is not provided by a GSM PLMN.
To this purpose a 9600 bit/s Access Rate shall be used in the PLMN, by exploiting only part of the available bandwidth. The

originating FA will add padding information to data received from the MSG modem, before transmission over the GSM-TCH; the terminating FA will remove the same information to restore the net 7200 bit/s continuous data stream to be transmitted over its local MSG modem.

The relevant procedures are fully described in sections 5.2.3.4 and 5.2.3.5.

4.2.3.5 Procedure interrupts

Procedure interrupts are only possible in Teleservice 61; in case of Teleservice 62 any attempt to invoke procedure interrupts by MMI on the MT (see section 4.3.1 below) will be ineffective.

4.2.4 Speed checking

Upon receiving DIS/DTC frame, the FA/IWF shall perform a basic speed checking procedure, aiming at verifying compatibility between the bit-rate possibilities offered by the called Fax apparatus (bit fields 11,12,13,14 in the FIF) and the actual Access Rates allowed on the GSM PLMN (2400/4800/9600 bit/s); in addition, some of these bit rates may result inhibited during the call, if a speed lower than 9600 bit/s has been chosen by the user in the call set up message (for example if a better error rate is required).
The following cases may occur:

- some of the bit-rates indicated in DIS/DTC are not allowed on GSM-TCH (e.g. the max speed indicated in setup is 9600 bit/s, while DIS/DTC requests V.33); a possible strategy to cater for this case is altering the indication in DIS/DTC to a compatible value (e.g. V.29) by forcing appropriately the relevant bits (*); other strategies are possible and allowed, as long as the same goal of supporting the progress of the call is pursued, by constraining the Fax apparatuses to use as message speeds the access rates actually available in the PLMN.

- the full set of bit-rates indicated in DIS/DTC are not compatible with the allowed Access Rates on GSM-TCH (e.g. the max speed indicated in setup is 2400 bit/s while DIS/DTC requests V.29 only); in this case the call shall be failed;

- the full set of bit-rates indicated in DIS/DTC are compatible with the allowed Access Rates on GSM-TCH; in this case no action shall be taken, independently of the access rate actually established.

It should be noted that the "9600 bit/s" as max speed indication in the SETUP message, does not preclude the

---

(*) Is beyond the scope of this recommendation to specify the implementation strategy adopted to recalculate the frame CRC after the manipulation; additional delays, if any, shall not have a significant impact on T.30 operability.

establishment of a Call towards a Fax GR 3 equipment supporting only 4800 and 2400 bit/s as Message speed.
As a matter of fact, due to the multiplexing mechanism for BCS phases the initial Access Rate (9600 bit/s) will affect only the connection part between the called MS and the associated IWF, whilst the appropriate Message speed will be actually negotiated during the initial BCS phase, and settled upon reading the appropriate field in DCS frame (see section 4.2.1.1/03.45).
Therefore, if a request for MSG transmission is received, without a valid DCS frame being detected in advance (hence the message speed is undefined), the FA/IWF shall release the call immediately.

4.3 Radio Channel Modification Procedures

There are two reasons why the characteristics of the radio channel may need to be changed during a call.

Firstly, for the swap from speech to data and vice-versa.
In this case the In Call Modification procedure as detailed in TS GSM 04.08 is carried out.

Secondly, if a T.30 speed drop back is requested, a channel mode modify procedure as detailed in TS GSM 04.08 is initiated to match the radio channel rate to the facsimile transmission speed to optimize the error rate.

4.3.1 In Call Modification (ICM)

Applies only for Teleservice 61.

The speech to facsimile change is initiated by MMI at the MT as in other data services, and is not visible to the Fax Adaptor (GSM facsimile machine); CT108.2 ON condition towards MT is a basic requirement to allow speech/data transition take place.

Selection of the speech phase from the data phase (T.30 Procedure Interrupt request) will be by manual intervention via the MT causing ICM, and is reflected to the Fax Adaptor (GSM Facsimile machine) by CT106 and CT109 going in OFF condition; CT107 will be maintained in ON condition even during the ensuing speech phase. Subsequent re-selection of the data phase will be by manual intervention via the MT causing ICM (reflected to the Fax Adaptor by CT107 going in OFF condition), and is conditioned upon CT108.2 being ON.

During the speech phase of a procedure interrupt, the condition of the Fax apparatus in the MS is not reported via the Fax Adaptor 'R' interface; it may remain functionally connected to the Fax Adaptor but in a suspended state. On returning to the data phase, the Fax apparatus will enter the T.30 'B' phase.

The precise operation of the Fax Adaptor for the support of procedure interrupt is implementation dependent.

4.3.2 Channel Mode Modify (CMM)

The channel mode modification procedure is only initiated by the FA/IWF. Its purpose is to reduce the radio channel bit rate to match the message speed negotiated end-to-end between the facsimile machines.

The FA/IWF enters the CMM routine upon detecting the DCS frame sent either from the MS or from the PSTN.

In the first case, FA/IWF being actually the receiving side in the facsimile document transmission, the CMM procedure is executed as soon as the end of frame is detected.
That is, FA/IWF monitors the DCS frame and, if the requested rate differs from the existing radio channel rate, then in sequence:

- issues a CMM request to the new rate towards the GSM signaling;

- waits for the acknowledgement of CMM completed (*);

- returns back to the usual information passing process.

In the second case, FA/IWF being actually the transmitting side in the facsimile document transmission, the CMM procedure is executed after a suitable delay assumed as the time for transferring the DCS frame across the Radio channel.
That is, FA/IWF monitors the DCS frame and, if the requested rate differs from the existing radio channel rate, then in sequence:

- waits for a fixed time of 150 msec.;

- issues a CMM request to the new rate towards the GSM signaling;

- waits for the acknowledgement of CMM completed;

- returns back to the usual information passing process.

As it will be seen below (see section 5.2.4), in both cases the execution of the CMM procedure has to be seen like an exception within the usual information passing process, even overlapping it to maintain the overall end-to-end fixed delay.

5. USE OF TERMINAL ADAPTATION FUNCTIONS

According to the Connection types (Fig.4/03.45) there are two classes of TAFs to be considered.

5.1 Standard TAFs for synchronous services

Are those described in TS GSM 07.03 for synchronous bearer capabilities in the transparent mode. The Rate Adaption functions shall comply with the TS GSM 04.21.

(*) Information sent/received to/from the GSM-TCH while waiting for CMM completed is considered irrelevant, and left implemetation dependent in the contest of this Recommendation.

The interchange circuit signaling mapping is in accordance with the TS GSM 07.03.

5.2 Specific TAFs for facsimile service

Integral part of an end-to-end connection for this Teleservice is the Fax Adaptation function, located at both the PLMN ends and in charge of adapting the T.30 protocol procedure to the GSM PLMN environment, as described in Section 4 of this Specification.

The main features relevant to the adaptation function are detailed in the following.
For a better clarification, the Finite State Machine approach will be adopted in the following description of FA functionality, considering it as a set of states defined by specific interactions with both the GSM digital channel and the analogue channel.

5.2.1. Working principle

The working principle of the proposed solution is depicted in Fig.6/03.45.

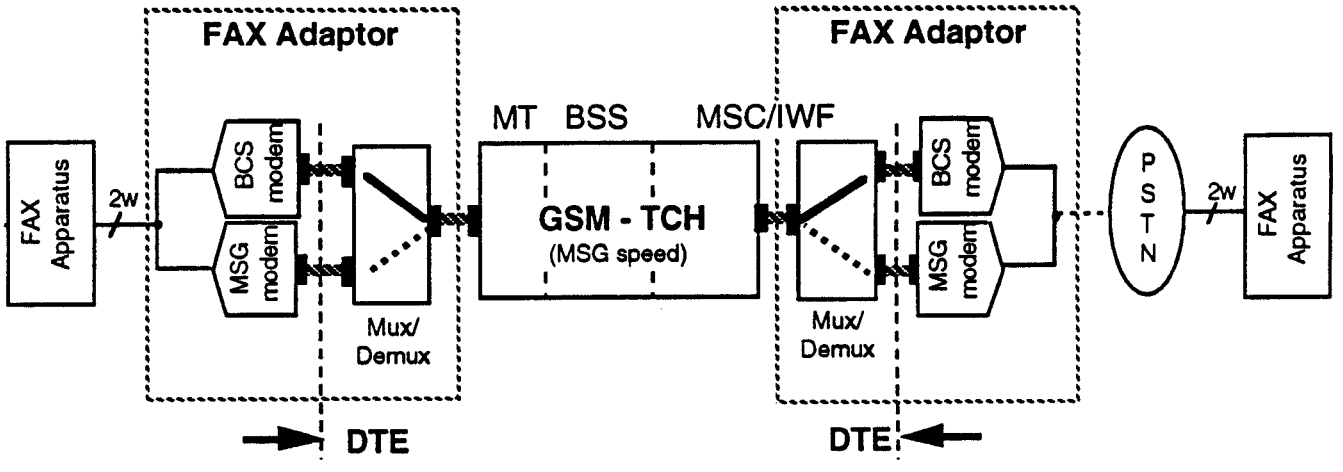

Fig. 6/03.45 Fax Adaptor working principle

The Fax Adaptor is split in its main functional blocks:

- a BCS (300 bit/s) modem capability (half duplex);
- a MSG (9600/7200/4800/2400 bit/s) modem capability (half duplex);
- Mux/Demux capability, to connect the GSM traffic channel (full duplex) to either of these modems.

Looking at the overall Facsimile service architecture in GSM (Fig. 5/03.45), half-duplex transmission is initiated in either side of the connection by the actual request on the physical interface (CT109 ON on the local modem), is then continued on the PLMN traffic channel (TCH), and finally terminated on the appropriate modem at the remote side.

On the basis of the above assumptions, considering the Fax Adaptor a finite state machine, the whole Adaptation process can be described by a set of 5 states:

- IDLE state, when the FA is just connected to the GSM-TCH, sending synchronizing patterns over the radio path;

- BCS-REC state, when the FA is receiving data from the V.21 modem (BCS phases);

- BCS-TRA state, when the FA is transmitting data over the V.21 modem (BCS phases);

- MSG-REC state, when the FA is receiving data from the MSG modem (2400/4800/7200/9600 bit/s);

- MSG-TRA state, when the FA is transmitting data over the MSG modem.

5.2.2. Basic protocol structure

The protocol structure is based on a strictly synchronous approach, using 64 bit fixed length frames; that is each FA actually sends/receives information as 64 bit frames, in sequence and without interruption, during the whole duration of a call; the content of each frame depends on the specific state currently implemented.

The following set of frame types encompasses the full range of capabilities required:

- SYNC frame, explicitly designed to allow synchronization at the remote end, even in the adverse transmission environment like the cellular radio channel; it is a unique frame, used even as idle frame whenever there is no information to be sent over the radio path;

- STATUS frame, intended to carry both state identification codes, along with state specific information; this frame has a unique structured format to allow synchronization checking at remote side; the actual information content is related to the specific state;

- DATA frame which is fully unstructured, and carries Fax coded information during MSG phases.

5.2.2.1 Frame formats

To reduce complexity of finding synchronization over a 64 bit pattern, SYNC frames are obtained by concatenating two 32 bit sync codewords, the second one being the 1's complement notation of the first one.
The following codes shall be used for sync codewords:

MSB
hex code 3E375096: first sync codeword
hex code C1C8AF69: second sync codeword

To improve the probability of detecting synchronization, up to 3 errors are tolerate in each single sync codeword; even in this conditions, the false sync probability is quite negligible.

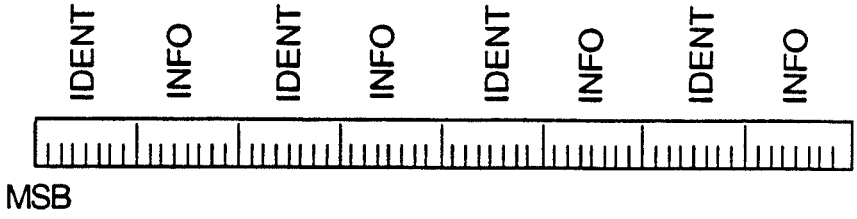

Fig 7/03.45 STATUS frame format

STATUS frames have an internal 8 bit modularity (see Fig.7/03.45), where odd octets contain state identification codes (IDENT), and even octets contain status specific information (INFO).
IDENT octets are split in two (four bit) fields, each one repeating the same code for status identification:

hex code 1: BCS-REC state
hex code 3: MSG-REC state
hex code 4: MSG-TRA state

To improve the probability of detecting the correct state, up to 3 corrupted codes are tolerate in the total 8 instances repeated within a single STATUS frame.
INFO octets contain the same code repeated 4 times within one frame; in particular:

- for BCS-REC state this octet contains 8 bits received from the BCS modem;
- in all other states an idle code (hex code 0F) is inserted.

DATA frames are 64 bit fully unstructured information blocks; the last DATA frame in a Message phase will be truncated to the actual length of the bit stream to be transmitted.

A general rule concerning all the above frames is that most significant bits are transmitted first; in addition, a basic First-In First-Out functionality will be implemented in the information passing process.

5.2.3 Protocol description

The above defined Finite State Machine model will be used to fully describe the protocol procedure.

5.2.3.1 IDLE state

In each FA this state implies a continuous transmission of SYNC frames towards the radio path, to allow frame synchronization at the remote end.
This state is entered into immediately after the end of the synchronization process over GSM-TCH, and will be returned to whenever loss of synchronization is assumed.

5.2.3.2 BCS-REC state

The basic function of FA in this state is transferring BCS information from its local modem to GSM-TCH.

Transition to this state is triggered by CT109 ON condition of V.21 modem.
Towards the radio path continuous transmission of STATUS frames is performed, according to the format described in the above section 5.2.2.1, as soon as 8 bits at least are available from the modem; information received from GSM-TCH is ignored while CT109 (local modem) is in the ON condition.
Every 8 bits received from the V.21 modem, the appropriate number of STATUS frames (1 or 2 or 4 depending on the current TCH access rate) will be originated.
Following CT109 (local modem) OFF condition, padding bits (e.g. 1s) will be inserted to assemble the last octet.

Monitoring the content of certain BCS frames is required; the DCS frame requires a specific procedure, detailed in the following Section 5.2.4 in this Specification.

5.2.3.3 BCS-TRA state

The basic function of FA in this state is transferring BCS information from GSM-TCH to its local V.21 modem.

Transition to this state is triggered by reception of BCS-REC code from TCH.
Towards the radio path continuous transmission of SYNC frames is performed, according to the format described in the above section 5.2.2.1.

The information received from GSM-TCH, after proper decimation (likely a voting algorithm, implementation dependent), is passed to the V.21 modem. Upon detecting again a SYNC frame, the modem is turned OFF and a transition to the IDLE state is performed.

Monitoring the content of certain BCS frames is required; the DCS frame requires a specific procedure, detailed in the following Section 5.2.4 in this TS.

In addition a supervisoring function is required to check maintenance of synchronization, by examining the inherently structured STATUS frame format.
Loss of synchronization will be assumed in case of reception of unstructured STATUS frames, that is, when the repetition mechanism for both the IDENT and the INFO octets does not allow unambiguous result to the voting algorithm. In this case an estimate of the INFO octet value in the received STATUS frames is anyway passed on to the V.21 modem, up to a maximum BCS-TRA duration of 2.5 sec.; at this point, if the correct synchronization has not been recovered yet, the modem is turned OFF and a transition to the IDLE state is performed.

In case of loss of V.110 synchronization on the PLMN side, the FA shall transmitt 0s towards the analogue interface, as long as no data is available.

5.2.3.4 MSG-REC state

The basic function of FA in this state is transferring MSG information from its local modem to GSM-TCH.

Transition to this state is triggered by the MSG modem being trained.
Towards the radio path continuous transmission of STATUS frames interleaved with SYNC frames is performed.
Actual transfer of Fax coded data over the radio path can be initiated only after the specific acknowledgment is received from the remote side, that is reception of MSG-TRA indication in a STATUS frame, signifying the correct state transition. All data received from the MSG modem will be stored in the FA buffer, to be passed on to GSM-TCH (First-In First-Out mechanism) as soon as this confirmation message is received.
Transmission is performed by means of unstructured DATA frames, aligned to the last SYNC or STATUS frame; in this phase, information received from GSM-TCH is ignored.

Following CT109 OFF condition of MSG local modem, after all buffered data are transmitted (the last DATA frame is truncated if necessary), a transition to the IDLE state is performed. In this state the FA waits (meanwhile BCS data received from the local modem are ignored) for a minimum of 5 transmitted SYNC frames, in order to indicate to the remote FA the end of the message.

While waiting for the acknowledgment re-synchronization shall be performed if necessary, following reception of unrecognizable SYNC frames or unstructured STATUS frames.

In case of 7.2 kbit/s MSG speed, a SYNC frame will be stuffed every 3 DATA frames, to produce the data stream at 9.6 kbit/s. The overall protocol structure will result in multi-frame entities (3 DATA frames followed by a single SYNC frame), continuously sent over the radio path.

5.2.3.5 MSG-TRA state

The basic function of FA in this state is transferring MSG information from GSM-TCH to its local MSG modem.

Transition to this state is triggered by reception of MSG-REC code from TCH; towards the radio path continuous transmission of STATUS frames interleaved with SYNC frames is performed.

The MSG modem is trained and a timer (300 msec.) corresponding to the round trip time over the GSM-TCH is started. After timeout, loss of synchronization in the information received from TCH, will be assumed as the first Fax coded DATA frame. From the receipt of Message on, continuous transmission of SYNC frames is performed.

All data received from the GSM-TCH will be stored in the FA buffer, to be passed on to the MSG modem (First-In First-Out mechanism) as soon as the modem training terminates (CT106 ON). From this time on, re-synchronization will be attempted continuously; when an IDLE state is recognized again in the data stream received from the radio path, end of MSG phase will be assumed; then a transition to the IDLE state will be executed, where the FA will wait (ignoring data received from GSM-TCH) until the buffered information has been fully transmitted to the local MSG modem; the procedure will then proceed in the normal way.

In case of 7.2 kbit/s MSG speed, the above general rule applies as well(*).
However multi-frame synchronization shall be checked in addition, to remove the SYNC frame stuffed by the originating FA to match the 9.6 kbit/s Access Rate over the PLMN. If necessary multi-frame re-synchronization shall be performed.

In case of loss of V.110 synchronization on the PLMN side, the FA shall transmitt 0s towards the analogue interface, as long as no data is available.

5.2.4 DCS and TCF processing

Transmission of TCF is performed end-to-end between the two Fax apparatuses, and requires in both FAs a specific routine triggered by DCS command.

As far as the originating FA is concerned, the general procedure as described above for MSG phase (MSG-REC state) applies, but no acknowledgment is required, both at the beginning and at the end, and so no buffering is necessary.
That is, just following CT 109 ON condition of the MSG modem, unstructured DATA frames are sent over the radio path, aligned to previous frames; upon CT 109 OFF condition the last frame is sent (truncated if necessary), and a transition to the IDLE state is performed.

As far as the terminating FA is concerned, after passing DCS command and waiting for the appropriate delay (75 msec), transition to the MSG-TRA is executed; here modem training shall be pre-empted and, as soon as the modem is ready for sending (CT 106 ON), loss of synchronization on TCH will be assumed as the first DATA frame containing TCF information and will be passed to the MSG modem.
After 1.5 sec. timeout (standard TCF duration), the MSG modem will be turned OFF and the IDLE state entered as usual. Fill information (i.e. logical 0s) will be sent on the local modem if real TCF bit stream is not available.

When DCS frame requires a different Message speed with respect to the actual Access Rate established on the GSM channel, CMM procedure will be issued (at IWF side only) as

---

(*) In this case, no longer an isolate SYNC frame can be interpreted as the end of MSG phase (transition to the IDLE state of the originating FA at the remote side)

detailed in Section 4.3.2 of this Specification, just upon detecting the end of DCS frame, before any other task.
To ensure that the time gap between the DCS and TCF is within 75 ± 20 ms period as specified in CCITT/T.30, the training shall be pre-empted in the terminating FA, as defined above.

5.2.5 DCN (disconnect) frame

The FA/MT, upon detection of the DCN frame (see T.30) sent by the local terminal to indicate the end of facsimile transmission, passes this information to GSM-TCH in the normal way and then, initiates the disconnection procedure towards MT, as defined in section 6.3/03.45.
When the DCN frame is received from GSM-TCH, disconnection procedure is initiated immediately by the FA/MT, as defined in section 6.3/03.45.

5.2.6 Clocking

At Mobile Station the Fax Adaptor or GSM facsimile machine will acquire received data bit timing on CT115 (from MT). The transmitter element timing CT114 (from MT) shall be synchronized to CT115.
Since a synchronous terminal adapter function is used, the clock rate over the V.24 interface will always reflect the rate over the radio interface.

In this Teleservice the Network Independent Clocking (NIC) mechanism is not used; to compensate against mismatching between PLMN clock speed and local modem clock speed, a FIFO buffering technique shall be adopted in the FAs on both the PLMN sides.
The strategy to manage the buffer queue has a direct impact on the overall delay of the MSG phase, and therefore on T.30 operability in the ensuing post-message phase; basically this procedure is regarded as implementation dependent, and hence is beyond the scope of this Specification. A possible implementation is described below, aiming at minimizing the addition delay.

In the originating FA, when the modem speed is lower, according to T.4 (Section 4.1.3/T.4) a pause may be placed in the message flow by transmitting a FILL sequence (variable string of 0s) between a line of Data and an EOL character.
When the modem speed is higher, as no flow control is provided by T.4 coding, the buffer will store excess data resulting from a Fax page transmission.

In the terminating FA the same control means will be exploited.

5.2.7 Timeouts

The overall Fax Adaptation function has no intrinsic timeout, and so relies fully on the timing constraints associated to the end-to-end T.30 procedure.

This means that, no matter of the reference configuration used at the Mobile station, either the "standard" one (Fig. 2a/03.45) or the "GSM Facsimile Machine" (Fig. 2d/03.45), the progress of the Call for this Teleservice will be merely subject to the T.30 typical timing protections, settled externally (physically and/or functionally) with respect to the procedure as above described.

5.3 Specific TAFs for facsimile service (T.30/A)

The optional error correction procedure, as defined in CCITT T.4 and T.30 (Annex A) Recommendations may be fully supported, provided some specific features are added to the Fax Adaptation procedure as resulting from the previous Section 5.2/03.45. These features are relevant to :

- additional HDLC frame to be detected;

- handling of the Message phase.

- modification of the Channel rate (CMM request);

The Error Correction mode is entered upon detection of the relevant bits in the DIS/DTC frame.

5.3.1 Frame detection

During the BCS phases, beside the frames enlisted in Section 4.2.1.1/03.45, an additional frame (CTC) has to be detected, as it fixes the retransmission strategy chosen by the Fax transmitting terminal.

5.3.2 Message phase

The same buffering approach as for standard T.30 procedure (see Section 5.2.3.1/03.45) will be exploited to overcome the mismatching in clock speed between PLMN and the local modem; in this case however the HDLC flag code (hex 7E) will be used to control the buffer level, as the Fax coded data are structured in HDLC frames

5.3.3 Additional CMM request

While in BCS the CTC frame has to be detected, due to the possible (not mandatory) request of changing the transmission speed to a fallback bit-rate.

The CMM request towards the PLMN (when appropriate) is issued at the IWF side, by exploiting the bit-rate indication in the CTC frame, similar to the indication in DCS frame.

Upon detecting the CTC frame, either sent by the PSTN or by the MS, provided the transmission speed indication is different from the existing Channel rate, as soon as the end of frame is detected, CMM request is issued, using exactly the same procedure as described for DCS in Section 4.3.2 of this Specification.

If a 7.2 Kbit/s MSG speed is requested in the CTC frame, no CMM request is necessary, and the specific procedure described in section 4.2.3.4 applies, using the same 9.6 kbit/s Access Rate over the PLMN channel.

6. SIGNALING ASPECTS

TS GSM 07.03 identifies the BC/LLC/HLC requirements to be supported by the MT.

In case of Teleservice 61 (Alternate Speech/Facsimile), both "Speech" and "Group 3 facsimile" Bearer Capability Information Elements (BC-IE) are necessary to set up the call; the sequence order in which these BC-IEs are transmitted identifies the service to be provided first by the PLMN.
For Mobile Originated calls, the MT indicates in the SETUP message the first requirement e.g. speech, by sending this as the first BC-IE; for an "autocalling" facsimile request, the "Group 3 Facsimile" BC-IE is sent as the first one.
For Mobile Terminated calls, the MT may change the order of BC-IEs and send them back in the CALL CONF message.

In case of Teleservice 62, a single BC-IE ("Group 3 Facsimile") is used.

6.1 Handling of Tonal Signals

Because the CCITT defined service uses modems, there are some signals received from the analogue link at the IWF and (where used) the Fax Adaptor which do not have a direct binary representation. These signals cannot therefore be passed across the radio interface in the same way as the T.30 and T.4 information.
These signals are the modem Called (CED) and Calling (CNG) tones sent at the start of the call; they are generated locally by the FA/MT and FA/IWF, exploiting an end-to-end time alignment mechanism, triggered by appropriate messages on the GSM signalling channel. The procedure is detailed in the following.

6.2 Call establishment

The PSTN Facsimile apparatus may be manually or automatically calling.

6.2.1 Mobile Terminated Call - Speech then Fax

Refer to the diagram in Fig. II-5/03.45.
In order to make the transition from the speech phase to the facsimile phase, the MODIFY command must be initiated by MMI on MT, forcing CT125 to ON condition.

In the case where a GSM facsimile machine is used, V.25bis auto answer process is handled directly by turning on CT108.2.

In the case where a Fax Adaptor is used, CT125 will cause ring current to be sent to the mobile Fax apparatus. The Fax Adaptor will turn on CT108.2 when the mobile Fax Apparatus answers the call.

On completion of the synchronization process over the radio interface, CT107 shall be turned on by the MT; in the case where a Fax Adaptor is used, on receipt of CT107 from MT, the Fax Adaptor will initiate the tonal handshaking by sending CNG (mandatory).

The analogue link at FA/IWF side will be established in accordance with the T.30 Recommendation; provided the synchronization process is completed (CT108.2 ON condition), the CED tone shall be transmitted after a silence time of 1.8 to 2.5 sec (see T.30/4.3.3.2) from the call being answered; during transmission of CED tone (2.6 sec. minimum duration, followed by a delay period of 75 ± 20 msec) the IWU/FA will process data received from GSM-TCH as usual, but the relevant information (e.g. preamble of a BCS frame) shall be discarded without any buffering.

Note that CT109 and CT106 at the R interface of the MT must be in the ON condition before any further procedure can be carried out end-to-end between the Fax Adaptors; therefore, as soon as the synchronization process over the radio interface is completed, both CT109 and CT106 (MT side) are clamped to the ON condition by the FA/IWF (by setting the appropriate status bits in the V.110 frame), so fixing a full-duplex mode throughout the whole data phase of the call.

6.2.2 Mobile Terminated Call - Auto answer

Refer to the diagram in Fig. II-6/03.45.
A call received from the PSTN will cause the MT to turn on CT125 at the R interface.

In the case where a GSM facsimile machine is used, V.25bis auto answer process is handled directly by turning on CT108.2.
In the case where a Fax Adaptor is used, CT125 will cause ring current to be sent to the mobile Fax apparatus. The Fax Adaptor will turn on CT108.2 when the mobile Fax Apparatus answers the call.

On receipt of CT108.2, the MT will answer the call and initiate the synchronization process over the radio interface.

On completion of the synchronization process over the radio interface, CT107 shall be turned on by the MT; in the case where a Fax Adaptor is used, on receipt of CT107 from MT, the Fax Adaptor will initiate the tonal handshaking by sending CNG (mandatory).

The analogue link at IWF side shall be established in accordance with the T.30 Recommendation; the same considerations apply as detailed in the previous section 6.2.1 for CED transmission.

Note that CT109 and CT106 at the R interface of the MT must be in the ON condition before any further procedure can be carried out end-to-end between the Fax Adaptors; therefore, as soon as the synchronization process over the radio interface is completed, both CT109 and CT106 (MT side) are clamped to the ON condition by the FA/IWF.

6.2.3 Mobile Originated call - Speech then Fax

Refer to the diagram in Fig. II-7/03.45.
In order to make the transition from the speech phase to the facsimile phase, the MODIFY command must be initiated, which will result in a synchronization phase over the radio interface and connection to line of FA/IWF.

In the case where a Fax Adaptor is used, the mobile Fax apparatus must be connected to line by manual intervention at this stage, and will cause the Fax Adaptor to turn on CT108.2 towards the MT.
In the case where a GSM facsimile machine is used, CT108.2 shall be turned on when the GSM facsimile apparatus is connected to line by manual intervention.

On completion of the synchronization process over the radio interface, the modem at IWF will be automatically selected and send CNG (mandatory) to PSTN Fax apparatus. Also CT107 shall be turned on by MT.
In the case where a Fax Adaptor is used, the receipt of CT107 shall cause the Fax Adaptor to connect to line.

Note that CT109 and CT106 at the R interface of the MT must be in the ON condition before any further procedure can be carried out end-to-end between the Fax Adaptors; therefore, as soon as the synchronization process over the radio interface is completed, both CT109 and CT106 (MT side) are clamped to the ON condition by the FA/IWF.

6.2.4 Mobile Originated call - Auto calling

Refer to the diagram in Fig. II-8/03.45.
Over the V.24 interface the autocalling procedure of V.25bis is initiated, using the relevant HDLC format commands.
This is done either directly from the GSM facsimile machine or, in the case where a Fax Adaptor is used, by loop disconnect or DTMF dialling information between the mobile Fax apparatus and the Fax Adaptor.

When the call is answered, a synchronization phase will take place over the radio interface.

On completion of the synchronization process over the radio interface, the modem at IWF will be automatically selected and send CNG (mandatory) to PSTN Fax apparatus. Also CT107 shall be turned on by MT.
In the case where a Fax Adaptor is used, the receipt of CT107 shall cause the Fax Adaptor to connect to line.

Note that CT109 and CT106 at the R interface of the MT must be in the ON condition before any further procedure can be carried out end-to-end between the Fax Adaptors; therefore, as soon as the synchronization process over the radio interface is completed, both CT109 and CT106 (MT side) are clamped to the ON condition by the FA/IWF.

6.2.5 Mobile Originated call - Manual calling

Refer to the diagram in Fig. II-9/03.45.
When the call is answered a synchronization phase will take place over the radio interface, provided CT108.2 is in ON condition.

In the case where a Fax Adaptor is used, the mobile Fax apparatus must be connected to line by manual intervention at this stage, and will cause the Fax Adaptor to turn on CT108.2 towards the MT.
In the case where a GSM facsimile machine is used, CT108.2 shall be turned on when the GSM facsimile apparatus is connected to line by manual intervention.

On completion of the synchronization process over the radio interface, the modem at IWF will be automatically selected and send CNG (mandatory) to PSTN Fax apparatus. Also CT107 shall be turned on by MT.
In the case where a Fax Adaptor is used, the receipt of CT107 shall cause the Fax Adaptor to connect to line.

Note that CT109 and CT106 at the R interface of the MT must be in the ON condition before any further procedure can be carried out end-to-end between the Fax Adaptors; therefore, as soon as the synchronization process over the radio interface is completed, both CT109 and CT106 (MT side) are clamped to the ON condition by the FA/IWF.

6.3 Call release

The normal call release procedure will be initiated at the Mobile Station, either by the GSM Facsimile Machine or by the FA/MT, forcing CT108.2 in OFF condition; this will follow DCN frame (disconnect, see section 5.2.5 in this document) occurrence, either sent over the GSM-TCH towards the remote Fax terminal or received via GSM-TCH from the remote Fax terminal.
In the former case CT109 will be actually turned OFF after a time delay of 200 msec from DCN being sent.
In the latter case no delay is necessary before turning CT108.2 in OFF condition; when the received DCN is corrupted and hence undetected in the Mobile Station by the FA, the Call Control entity in the MSC/IWF will release the call over the PLMN connection element, following the disconnection over the PSTN.

7. INTERWORKING TO FIXED NETWORKS

PSTN and ISDN only are considered, both used as transit network to complement the PLMN in the end-to-end connection between GR 3 facsimile apparatus, Fig. 8/03.45.

As far as the signalling aspect are concerned, both general and Facsimile Teleservice specific requirements, as specified in TS GSM 09.07, apply.
Clarifications given in the following deal with Traffic channel aspects only.

7.1 Interworking to PSTN

As the standard access of Group 3 facsimile terminals for this Teleservice is a 2-wire analogue interface, all the technical requirements for network interworking to PSTN are identical in principle to those encountered for the terminal connection to the MT.

The key functional block is the Fax Adaptor described in Sections 4 to 6 of this Specification.
As far as network interworking is concerned, the main function to be performed by such block is the correct managing of a composite modem, in accordance with the requirements of CCITT Rec. T.30:

- V.21 synchronous mode, as standard facility for all BCS phases;

- V.27ter for message speeds of 4800 and 2400 bit/s;

- V.29 for 9600, 7200 and 4800 bit/s message speed.

The mechanism for selecting the right modem is the following:

- the actual message speed is obtained by detecting the DCS frame (see Table 2/T.30) while in BCS phase;

- on entering the Message phase, there is an interchange between the V.21 modem and the actual modem agreed upon between the terminals for message transmission;

- on exiting the Message phase the V.21 modem is selected again.

Times for settling the modems will be in accordance with the requirements of Rec. T.30.

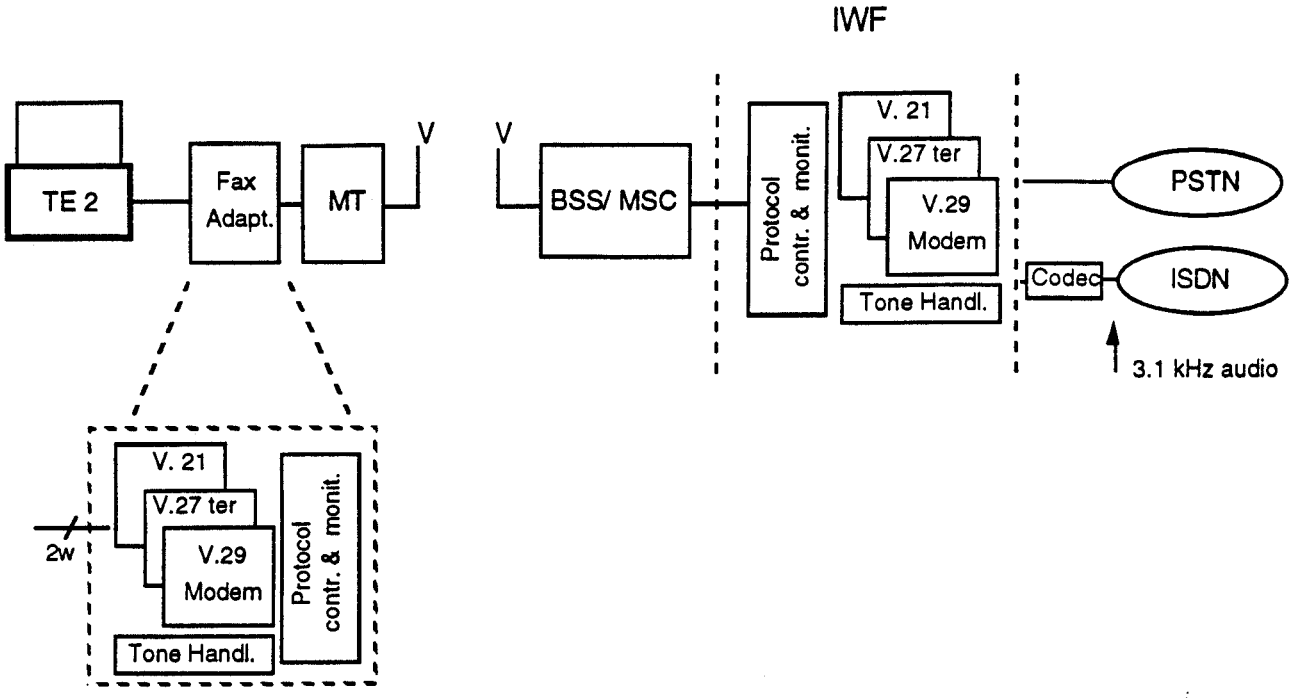

Fig. 8/03.45 Network interworking

7.2 Interworking to ISDN

The use of 3.1 kHz bearer capability of ISDN allows for an interworking of PLMN very similar in practice to the scheme for PSTN, Fig. 6/03.45.

The Fax Adaptor function is in conformance with the description given in Sections 4 to 6 of this Specification, and operates as detailed in Section 7.1/03.45.

Annex

References, definitions, abbreviations

A.1 Normative references

This technical specification incorporates by dated or undated reference, provisions from other publications. These normative references are cited at the appropriate places in the text and the publications are listed hereafter. For dated references, subsequent amendments to or revisions of any of these publications apply to this specification only when incorporated in it by amendment or revision. For undated references the latest edition of the publication referred to applies.

F.160	CCITT Fascicle II.5 - General operational provision for the international public facsimile services
T.4	CCITT Fascicle VII.3 - Standardization of group 3 facsimile apparatus for document transmission
T.30	CCITT Fascicle VII.3 - Procedures for document facsimile transmission in the general switched telephone network
V.21	CCITT Fascicle VIII.1 - 300 bits per second duplex modem standardized for use in the general switched telephone network
V.24	CCITT Fascicle VIII.1 - List of definitions for interchange circuits between data terminal equipment (DTE) and data circuit-terminating equipment (DCE)
V.25 bis	CCITT Fascicle VIII.1 - Automatic calling and/or answering equipment on the general switched telephone network (GSTN) using the 100-series interchange circuits
V.27 ter	CCITT Fascicle VIII.1 - 4800/2400 bits per second modem standardized for use in the general switched telephone network
V.29	CCITT Fascicle VIII.1 - 9600 bits per second modem standardized for use on point-to-point 4-wire leased telephone-type circuits
V.33	CCITT Fascicle VIII.1 - 14400 bits per second modem standardized for use on point-to-point 4-wire leased telephone-type circuits
X.300	CCITT Fascicle VIII.6 - General principles for interworking between public networks, and between public networks and other networks for the provision of data transmission services
TS GSM 01.04	Vocabulary in a GSM PLMN
TS GSM 02.03	Teleservices supported by a GSM PLMN
TS GSM 03.10	GSM PLMN Connection Types
TS GSM 04.08	Mobile Radio Interface - Layer 3 Specification
TS GSM 04.21	Rate Adaption on MS-BSS Interface
TS GSM 07.01	General on Terminal Adaption Functions for MSs
TS GSM 07.03	Terminal Adaption Functions for Services using synchronous Bearer capabilities
TS GSM 09.07	General requirements on Interworking between the PLMN and the ISDN or PSTN

A.2 Definitions and abbreviations

For the purpose of this standard the following abbreviations apply, beside the ones enlisted in TS GSM 01.04.

BC	Bearer Capability
BC-IE	Bearer Capability Information Element
BCS	Binary Coded Signalling phase of Facsimile transmission as per CCITT T.30
CMM	Channel Mode Modify
CT105	Interchange Circuit 105 as per CCITT V.24
CT106	Interchange Circuit 106 as per CCITT V.24
CT107	Interchange Circuit 107 as per CCITT V.24
CT108.2	Interchange Circuit 108/2 as per CCITT V.24
CT109	Interchange Circuit 109 as per CCITT V.24
CT114	Interchange Circuit 114 as per CCITT V.24
CT115	Interchange Circuit 115 as per CCITT V.24
FA	Fax Adaptor
FA/MT	The Fax Adaptor specifically located at MT side
FA/IWF	The Fax Adaptor specifically located at IWF side
HLC	High Layer Compatibility
ICM	In-Call Modification
LLC	Low Layer Compatibility
MSG	Message phase of Facsimile transmission as per CCITT T.30
MT0	Mobile Termination with no support for terminal interface
MT1	Mobile Termination with support for S-type terminal interface
MT2	Mobile Termination with support for R-type terminal interface
TAF	Terminal Adaption Function

All protocol entities from CCITT Facsimile Recommendations (T.4 and T.30) apply; in this specification they are referenced to in the same way as in the above CCITT Recommendations (see also Appendix 1 to this Specification).

Appendix I

Protocol entities from CCITT T.30 and T.4

List of CCITT T.30 signals

Abbre-viation	Function	Signal format	T.30 Standard	T.30 Err.Corr.
CED	Called station identification	2100 Hz	X	X
CFR	Confirmation to receive	X010 0001	X	X
CRP	Command repeat	X101 1000	X	X
CIG	Calling subscriber identification	1000 1000	X	X
CNG	Calling tone	1100 Hz	X	X
CSI	Called subscriber identification	0000 0010	X	X
CTC	Continue to correct	X100 1000		X
CTR	Response to continue to to correct	X010 0011		X
DCN	Disconnect	X101 1111	X	X
DCS	Digital command signal	X100 0001	X	X
DIS	Digital identification signal	0000 0001	X	X
DTC	Digital transmit command	1000 0001	X	X
EOM	End of message	X111 0001	X	
EOP	End of procedure	X111 0100	X	
EOR	End of retransmission	X111 0011		X
ERR	Response to end of retransmission	X011 1000		X
FCD	Facsimile coded data	0110 0000		X
FCF	Facsimile control field	--	X	X
FCS	Frame checking sequence	16 bit	X	X
FIF	Facsimile information field	--	X	X
FTT	Failure to train	X010 0010	X	X
MCF	Message confirmation	X011 0001	X	X
MPS	Multi-page signal	X111 0010	X	
NSC	Non-standard facilities command	1000 0100	X	X
NSF	Non-standard facilities	0000 0100	X	X
NSS	Non-standard set-up	X100 0100	X	X
PIN	Procedural interrupt negative	X011 0100	X	X
PIP	Procedural interrupt positive	X011 0101	X	X
PIS	Procedure interrupt signal	462 Hz	X	X
PPR	Partial page request	X011 1101		X
PPS	Partial page signal	X111 1101		X
PRI	Procedure interrupt	X111 XXXX	X	
RCP	Return to control for partial page	0110 0001		X
RNR	Receive not ready	X011 0111		X
RR	Receive ready	X111 0110		X
RTN	Retrain negative	X011 0010	X	X
RTP	Retrain positive	X011 0011	X	X
TCF	Training check frame	0... 1.5s	X	X
TSI	Transmitting subscriber identification	X100 0010	X	X

List of CCITT T.4 signals

Abbre-viation	Function	Signal format
EOL	End of line	0000 0000 0001
RTC	Return to control	6 * EOL

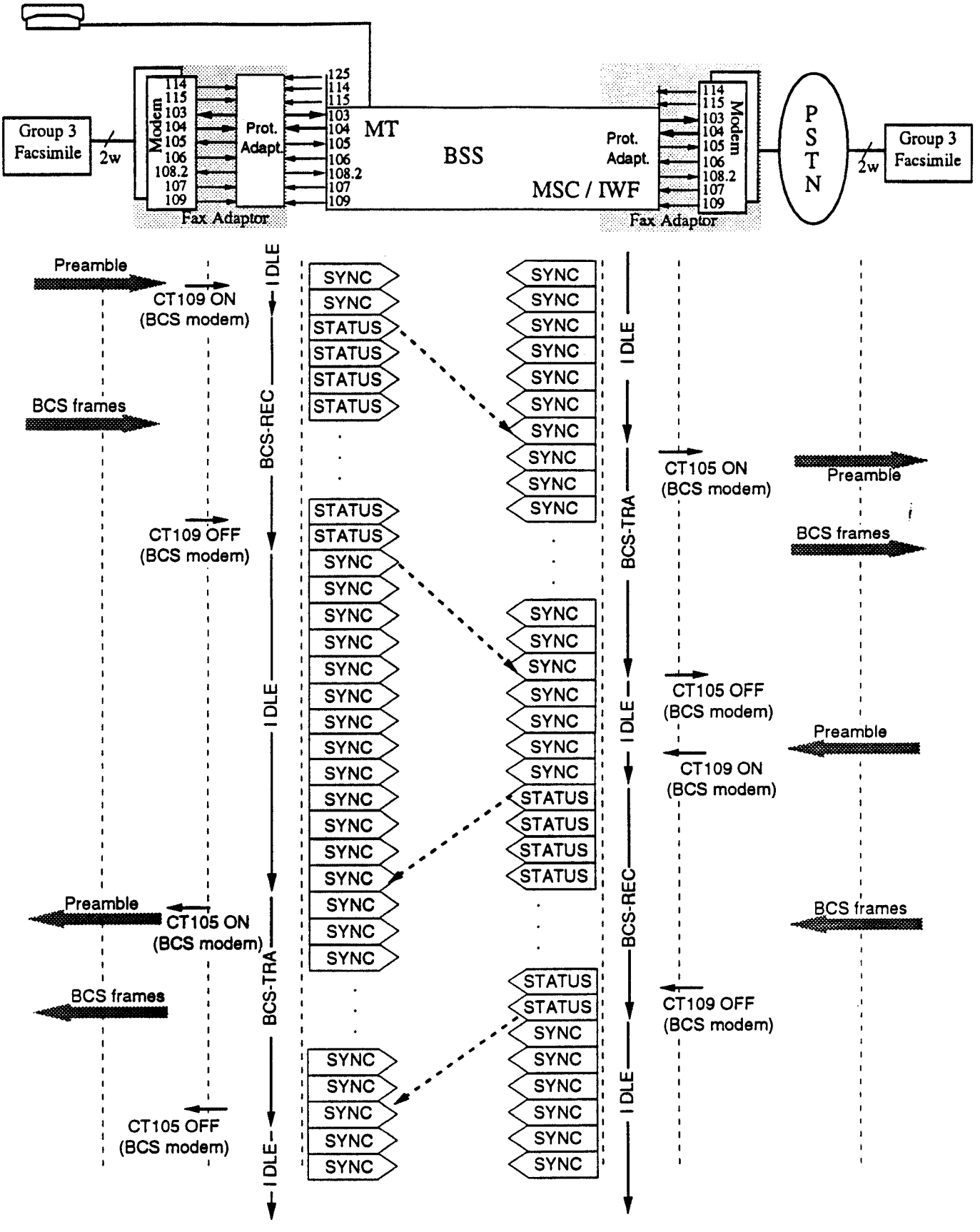

Fig. II-1/03.45
- Mobile originated facsimile transmission -
Typical BCS phase (command/response)

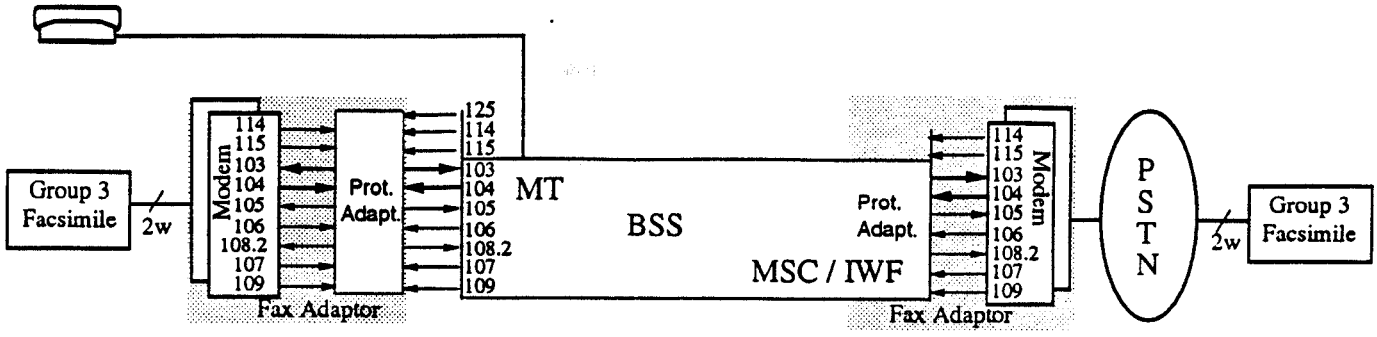

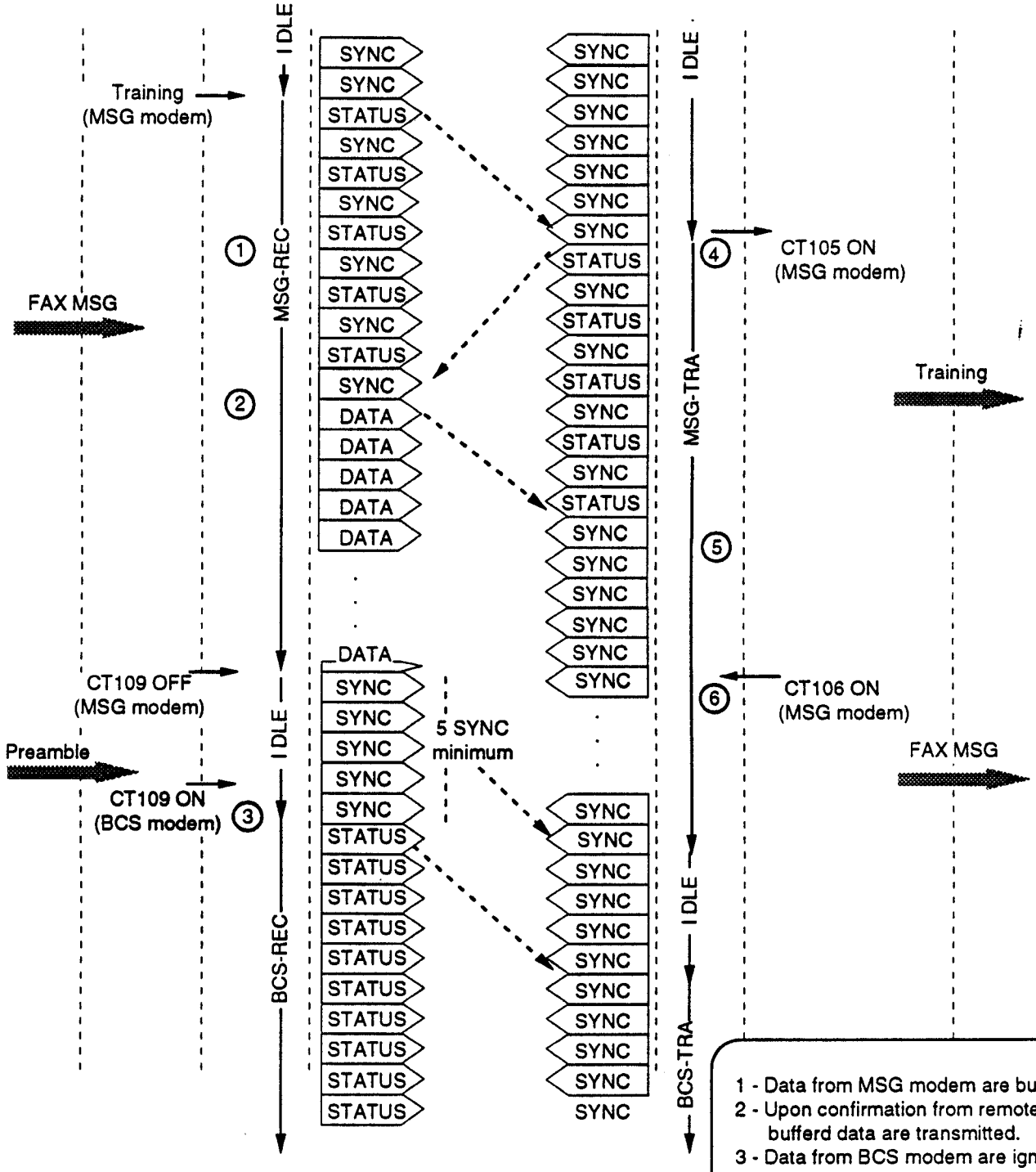

1 - Data from MSG modem are buffered.
2 - Upon confirmation from remote FA, bufferd data are transmitted.
3 - Data from BCS modem are ignored until 5 SYNC frames are transmitted.
4 - Training is initiated.
5 - Data from GSM-TCH are buffered.
6 - Upon end of training, buffered data are transmitted to the modem.

Fig. II-2/03.45
- Mobile originated facsimile transmission -
Typical MSG phase

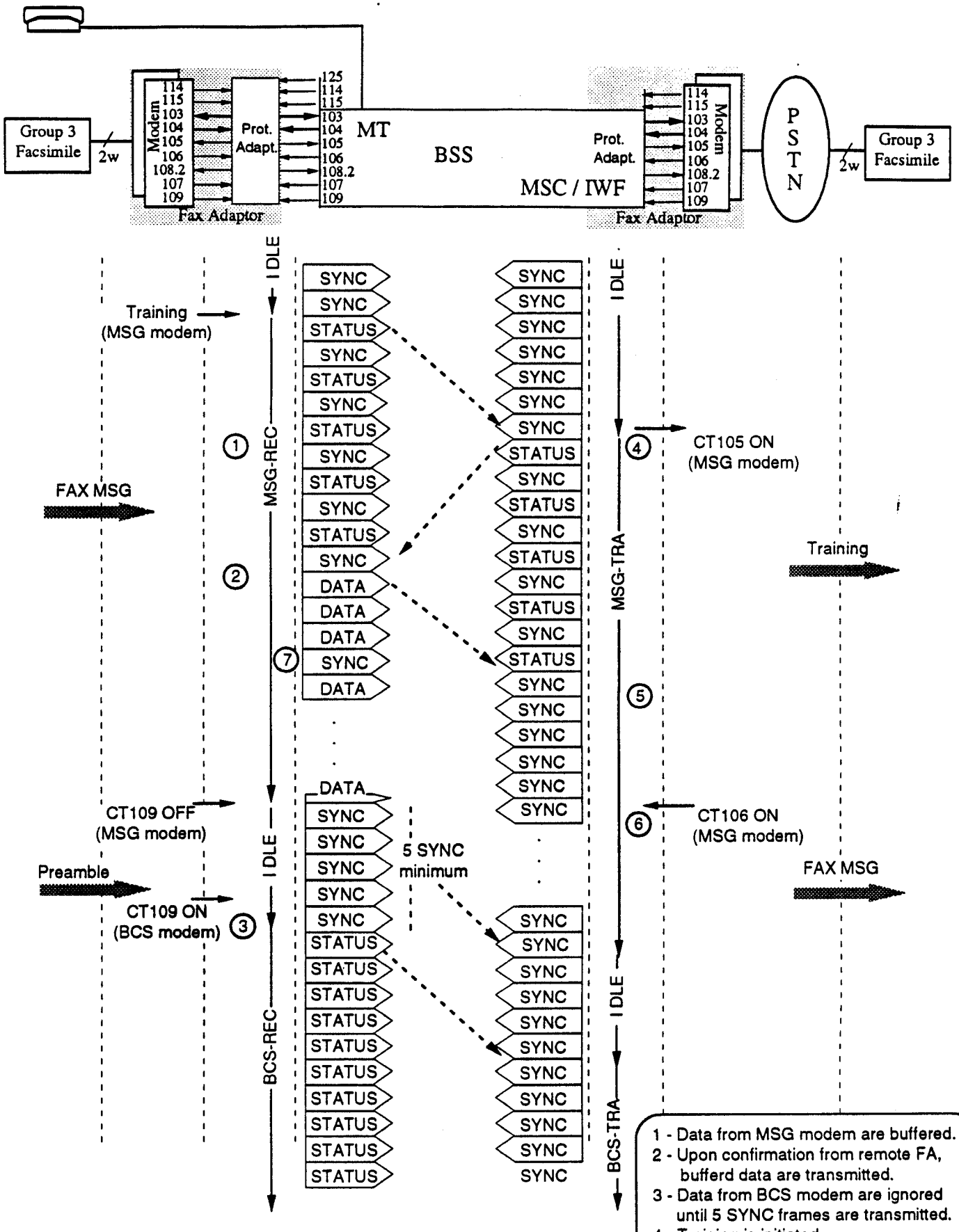

1 - Data from MSG modem are buffered.
2 - Upon confirmation from remote FA, bufferd data are transmitted.
3 - Data from BCS modem are ignored until 5 SYNC frames are transmitted.
4 - Training is initiated.
5 - Data from GSM-TCH are buffered.
6 - Upon end of training, buffered data are transmitted to the modem.
7 - A SYNC frame is stuffed every 3 DATA frames.

Fig. II-3/03.45
- Mobile originated facsimile transmission -
MSG phase (7.2 kbit/s MSG speed)

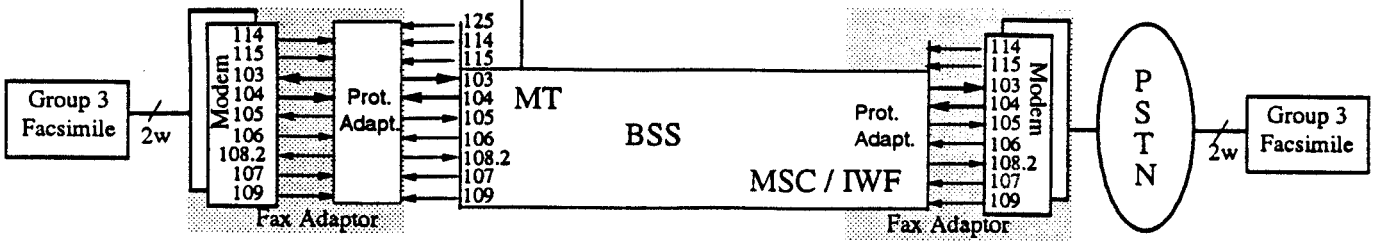

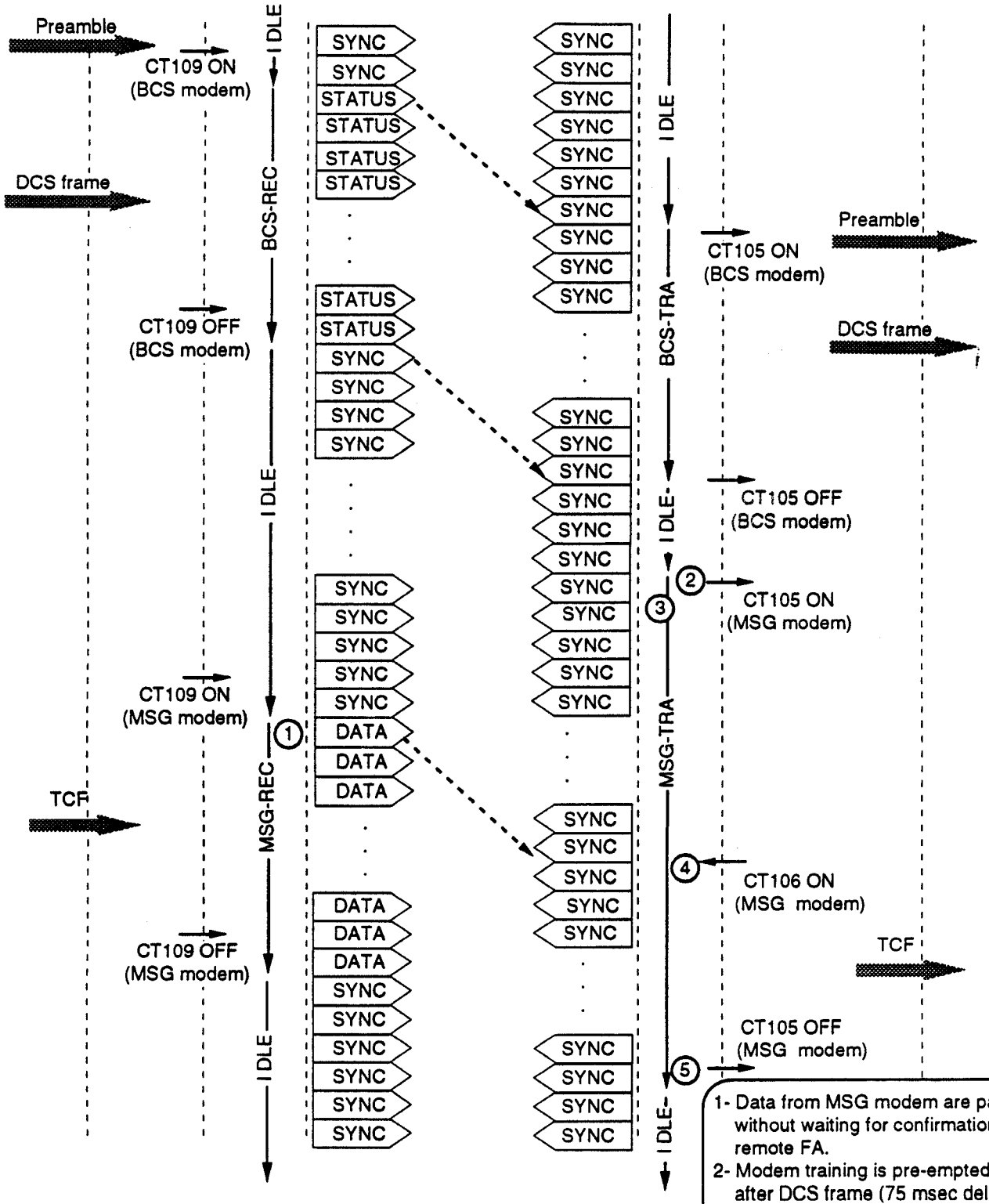

Fig. II-4/03.45
- Mobile originated facsimile transmission - Processing DCS frame and TCF message

1- Data from MSG modem are passed without waiting for confirmation from remote FA.
2- Modem training is pre-empted just after DCS frame (75 msec delay).
3- CMM request if appropriate
4- Upon end of training, data from GSM-TCH are passed to MSG modem.
5- After 1.5 sec the MSG modem is turned OFF.

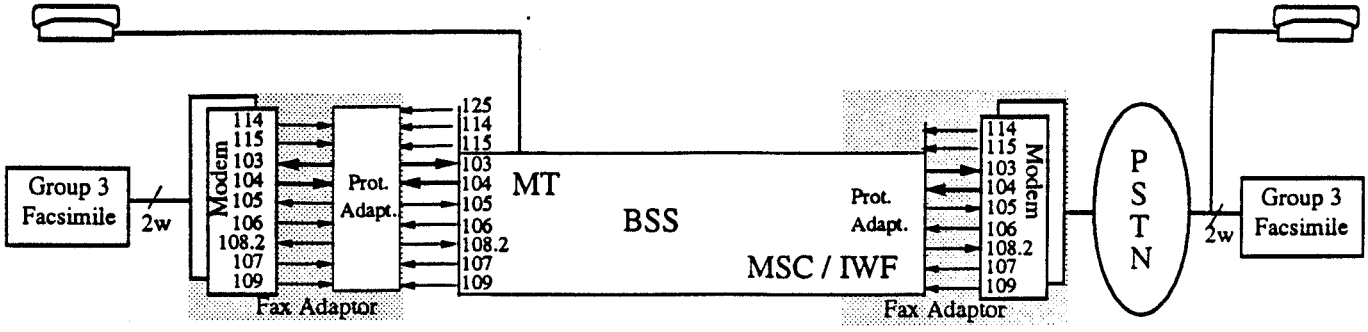

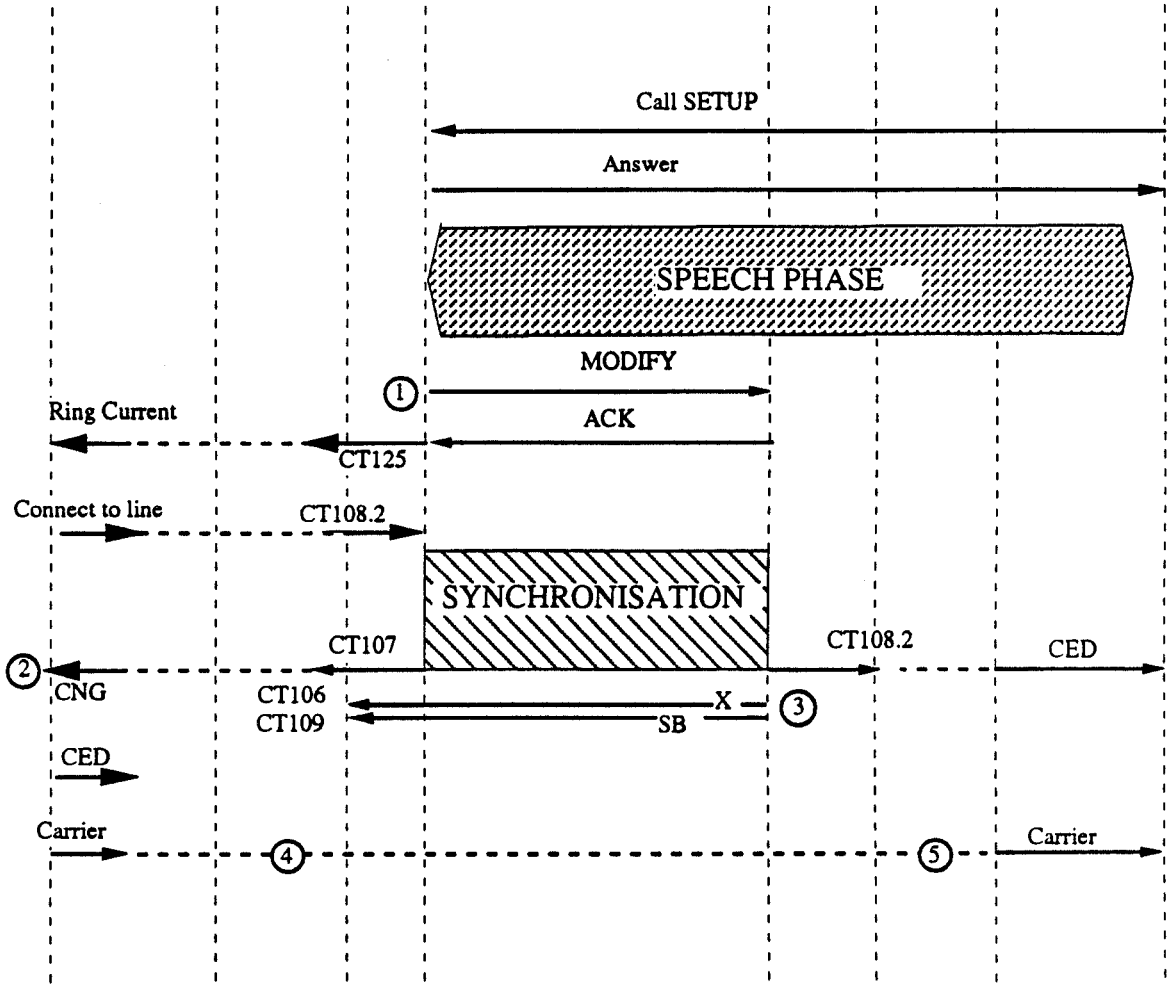

1 - Manual intervention
2 - Mandatory
3 - Locally generated by Fax Adaptor at IWF
4 - BCS-REC state of Fax Adaptor
5 - BCS-TRA state of Fax Adaptor

Fig. II-5/03.45
- Mobile Terminated Call - Speech then Fax

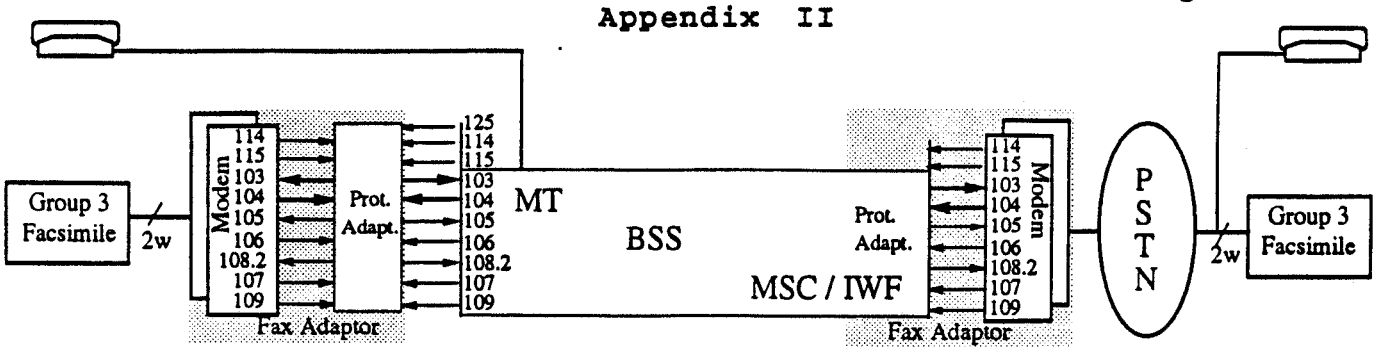

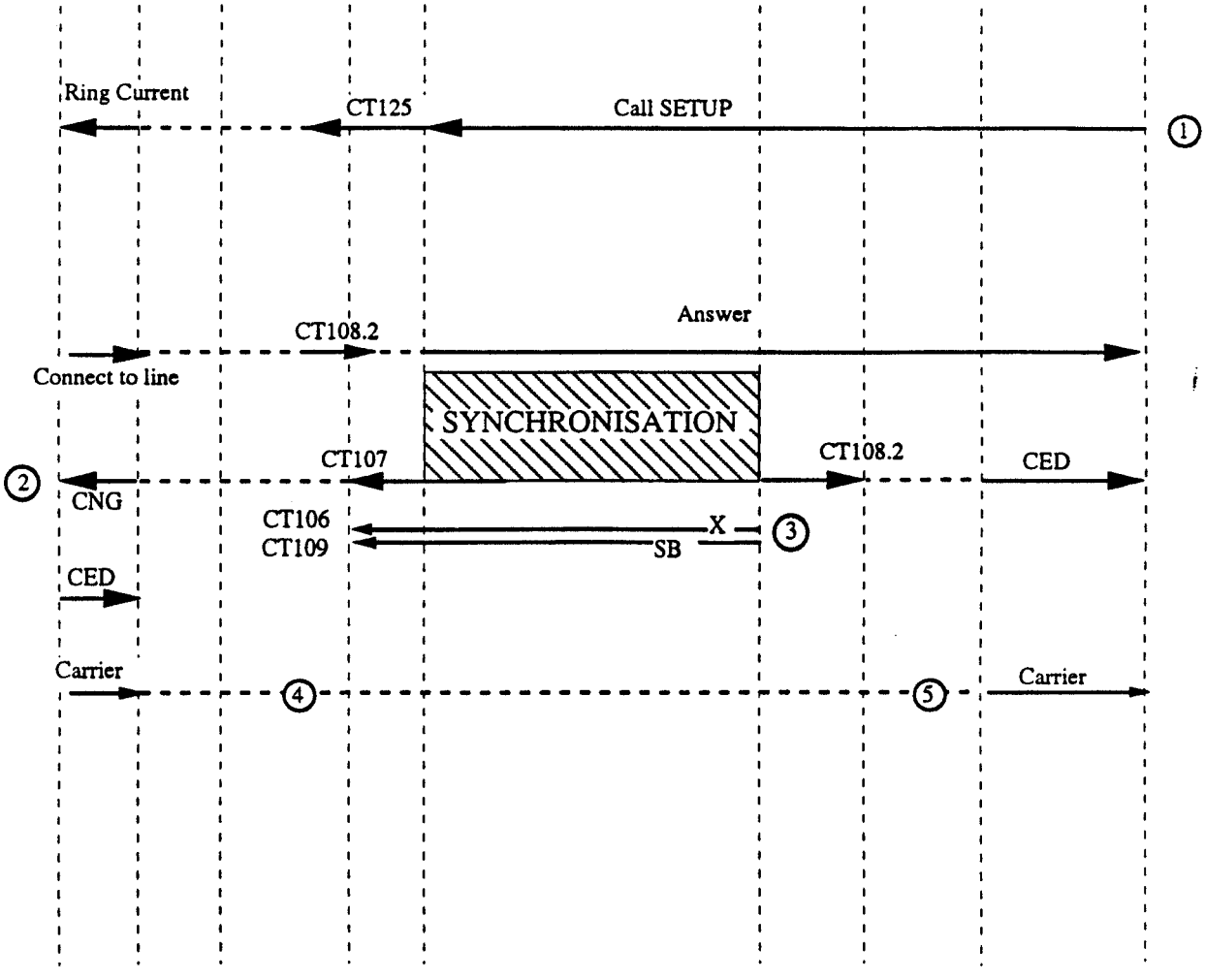

1 - Manual or automatic operation
2 - Mandatory
3 - Locally generated by Fax Adaptor at IWF
4 - BCS-REC state of Fax Adaptor
5 - BCS-TRA state of Fax Adaptor

Fig. II-6/03.45
- Mobile Terminated Call - Auto Answer

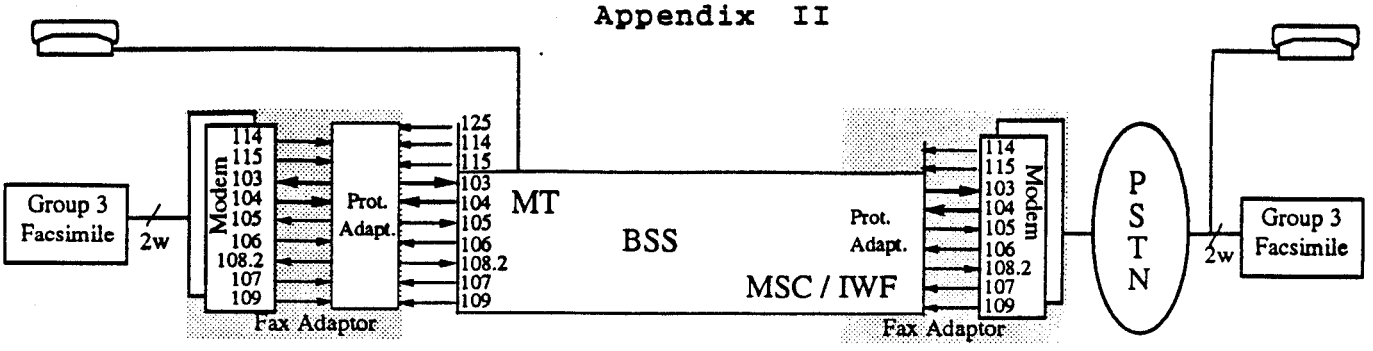

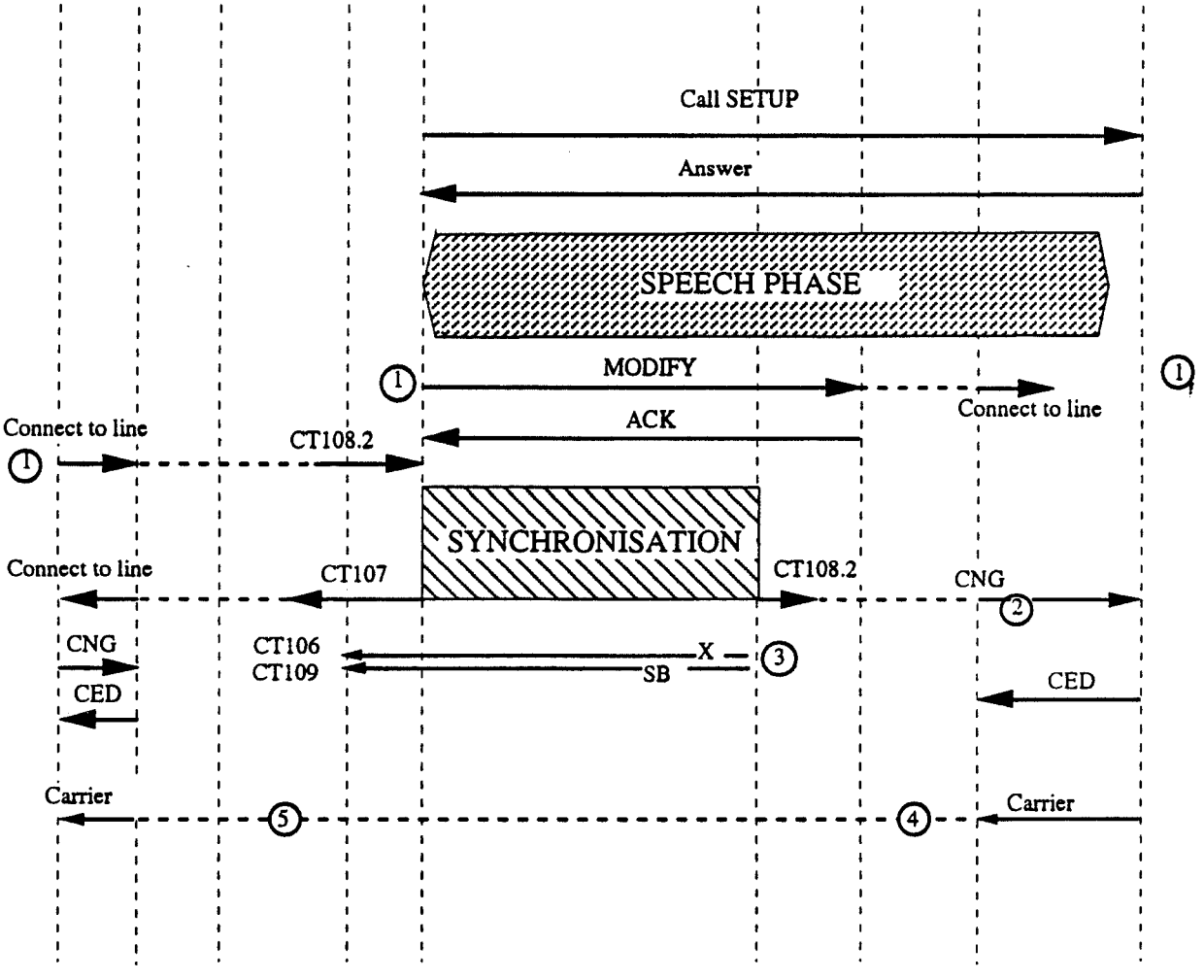

1 - Manual intervention
2 - Mandatory
3 - Locally generated by Fax Adaptor at IWF
4 - BCS-REC state of Fax Adaptor
5 - BCS-TRA state of Fax Adaptor

Fig. II-7/03.45
- Mobile Originated Call - Speech then Fax

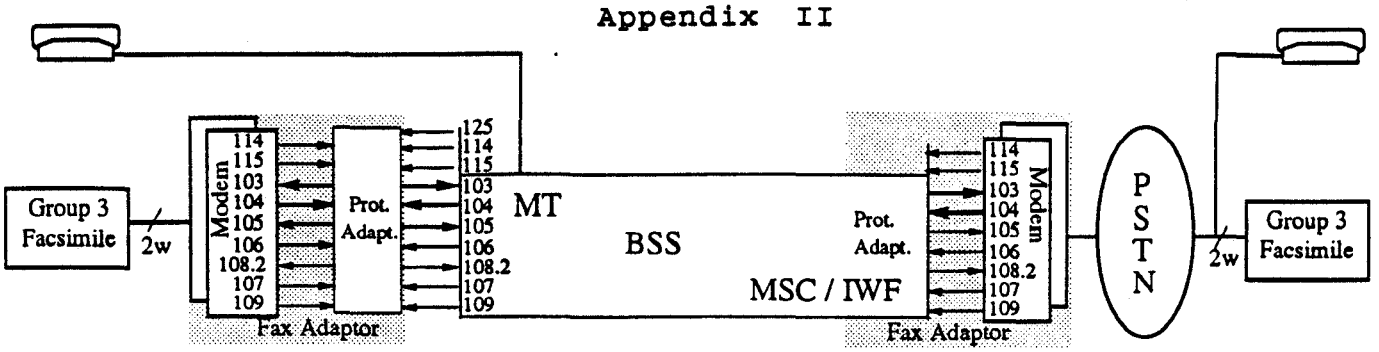

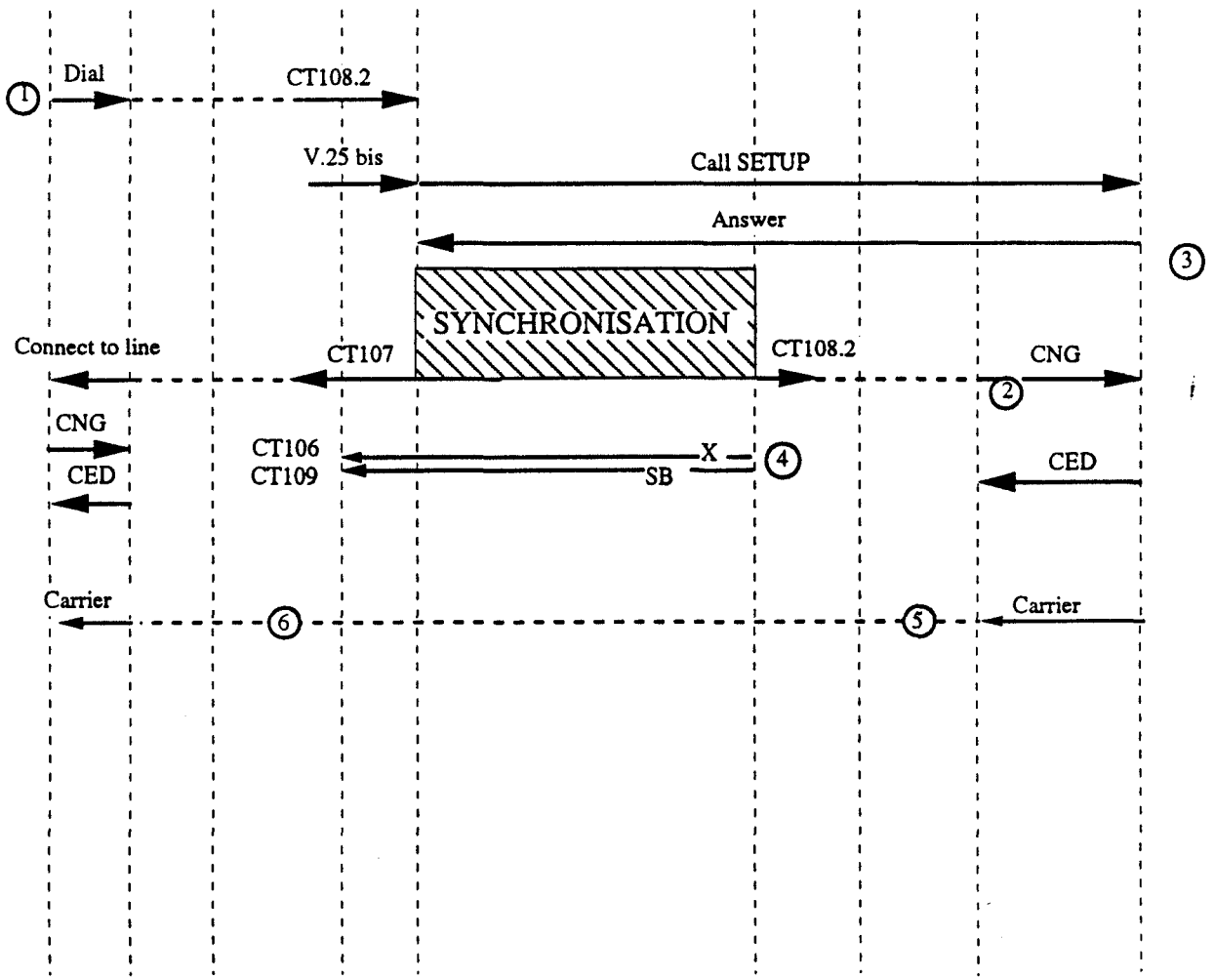

1 - Manual intervention
2 - Mandatory
3 - PSTN Fax apparatus may be manually or automatically answered
4 - Locally generated by Fax Adaptor at IWF
5 - BCS-REC state of Fax Adaptor
6 - BCS-TRA state of Fax Adaptor

Fig. II-8/03.45
- Mobile Originated Call - Auto Calling

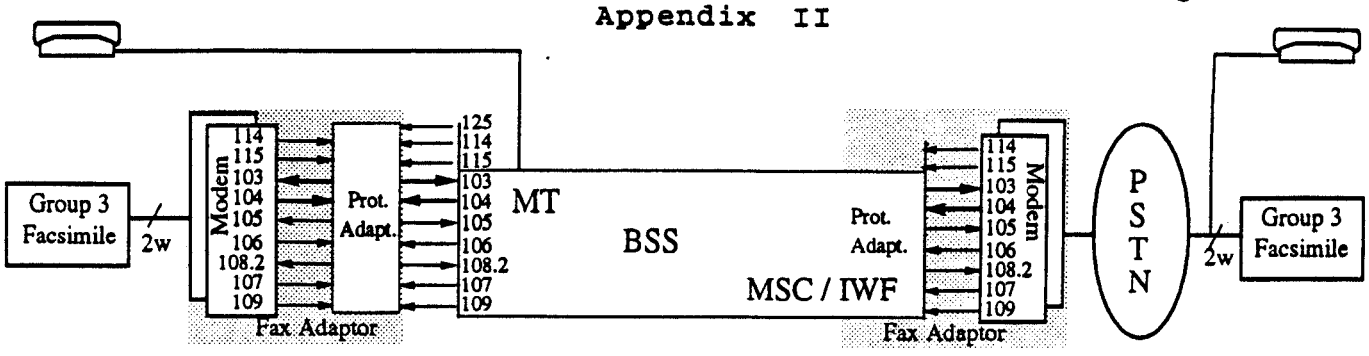

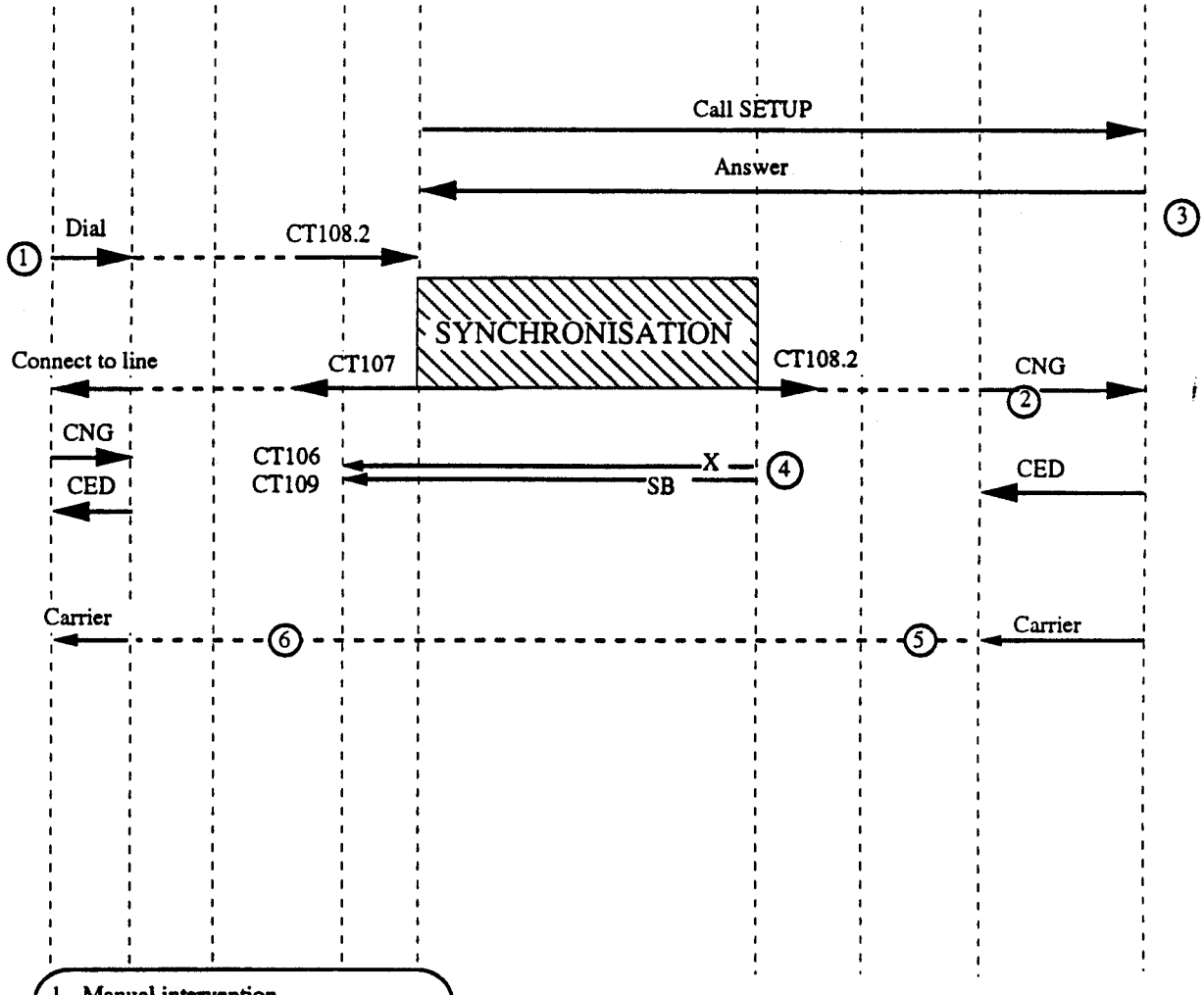

1 - Manual intervention
2 - Mandatory
3 - PSTN Fax apparatus may be manually or automatically answred
4 - Locally generated by Fax Adaptor at IWF
5 - BCS-REC state of Fax Adaptor
6 - BCS-TRA state of Fax Adaptor

Fig. II-9/03.45
- Mobile Originated Call - Manual Calling