Annex F: Interference to hearing aids by the new digital mobile telephone system, Global System for Mobile (GSM) communications standard

Interference to Hearing Aids
by the new Digital Mobile Telephone System,
Global System for Mobile (GSM)
Communications Standard

Ken H. Joyner
Mike Wood
ELECTROMAGNETIC COMPATIBILITY SECTION
TELECOM RESEARCH LABORATORIES

and

Eric Burwood
Derek Allison
Ross Le Strange
ENGINEERING SECTION
NATIONAL ACOUSTIC LABORATORIES

NATIONAL ACOUSTIC LABORATORIES
a Division of AUSTRALIAN HEARING SERVICES
SYDNEY, 30 March, 1993.

ABSTRACT

This report gives the details of some measurements on the interference caused to hearing aids by mobile telephones using the new "Global System for Mobile" (GSM) Communications Standard. The widespread use of this system may cause considerable interference to users of hearing aids. It is not known at present if hearing aids can be designed to be completely immune from this interference. This report has been written to alert all hearing aid users and those concerned with the use of hearing aids to the possible disruption to the use of hearing aids that may be caused by the new GSM system.

Table of Contents

1	Introduction	1
2	Acknowledgments	1
3	Nature of Transmission from GSM Mobile Telephones	1
4	Interference to Hearing Aids	2
5	Description of Measurements	2
6	Interpretation of the Results	3
7	Interfering Mechanism	4
8	Remedies	4
9	Conclusion	5
10	Recommendation	5
11	References	5

List of Tables

1	Field Strength for Noticeable Interference to Hearing Aids	6
2	Threshold Distances for Noticeable Interference to Hearing Aids	7
3	Measured Field Strengths Near GSM 8 Watt Transportable Mobile Telephone	8
4	Measured Field Strengths Near GSM 2 Watt Hand-Held Mobile Telephone	9

List of Figures

1	Sample Frequency Spectrum of a Hearing Aid Output with Interference	10
2	GSM Transmitter - Test Set-Up for Simulating Transmission	11
3	Hearing Aid Output with an Interfering Signal - Test Set-Up	12
4	Sample Acoustic Frequency Response of Hearing Aid	13

1 Introduction

The new mobile telephone system, using the "Global System for Mobile" (GSM) communications standard, is due for introduction in April this year. It uses digital technology and operates at radio frequencies (RF) in the 900 MHz region. The portable hand held and transportable telephones are capable of interfering with commonly used electronic equipment and can degrade the performance or even prevent the operation of hearing aids.

NAL was approached by Telecom Research Laboratories Electromagnetic Compatibility Section about the possibility of checking if the system interferes with hearing aids. Telecom was undertaking an investigation into interference caused by the digital telephones. As a result NAL and Telecom staff undertook a series of measurements designed to establish the nature and extent of interference to hearing aids.

The following is a report of these measurements, together with some recommendations.

2 Acknowledgments

Dr. Ken Joyner, Head of the Electromagnetic Compatibility Section, Telecom Research Laboratories, first approached NAL through Mr. Eric Burwood and visited NAL on 18th and 19th February, 1993 when it was established that interference may be a problem. Subsequently, measurements were carried out on 4th and 5th March 1993 to quantify the extent of the interference likely to be experienced by hearing aid users. Dr. Joyner and Mike Wood of Telecom Research Laboratories Electromagnetic Compatibility Section set up the equipment to generate the radio frequency field to simulate the telephone emissions and also provided Tables 3 and 4 of field strengths emitted by the GSM mobile telephones. Messrs. Eric Burwood, Derek Allison and Ross Le Strange of National Acoustic Laboratories carried out the hearing aid measurements.

3 Nature of Transmission from GSM Mobile Telephones

For the GSM system the radio spectrum available for mobile-to-base (i.e. mobile telephone) transmission is between 890 and 915 MHz, and for base-to-mobile it is 935 to 960 MHz. The modulation produces 0.6 ms bursts of RF energy from each telephone transmitter at a pulse rate of 217 Hz. A number of peak power levels and equipment configurations are available for GSM mobile telephones for use within Australia. These include a 2 watt hand held unit and an 8 watt transportable unit. When due account is taken of the pulsed nature of the transmissions, the corresponding average power levels are 0.25 watt and 1 watt respectively.

The peak RF field strengths close to the antenna of the mobile telephone can be quite high. At 10 cm from an 8W transportable unit a peak RF field of 70-80 V/m has been measured.

The GSM system is a pulsed system with a higher peak power than the present analog mobile telephone system. This makes the GSM

system much more likely to cause interference into electronic equipment which is apparently not affected by analog RF fields. Obviously the potential for interference depends on the number of GSM mobile telephones in use in the community and this is unlikely to be very high in the next few years.

4 Interference to Hearing Aids

Interference to a hearing aid is considerable, the amount depending on the details of its design. Considerable concern is felt by the European Hearing Instrument Manufacturers Association as the new system is being implemented in all European countries. The Australian Telecommunications Authority, Austel is embarking on an investigation into "emerging technologies for the delivery of wireless personal communications".

The interference from one transmitter is heard in the hearing aid as a constant, distinctive buzzing sound while the telephone is transmitting nearby. Figure 1 shows a typical frequency spectrum of the output of a hearing aid with interference, which occurs across the useable range from 200 to over 5000 Hz.

Hearing aids from all manufacturers will be similarly prone to this interference.

5 Description of Measurements - Sensitivity of the Hearing Aids to the Interfering RF Signal

a <u>Aim</u>: To measure how the effect of the interference varies with the peak RF field strength, so that useful predictions could be made about the effect on hearing aids in proximity to these telephone transmitters. This was done by:-

i Measuring the output of the aids subjected to varying RF field strengths, and

ii Subjectively comparing the interfering output with a sound of known intensity.

b <u>Method</u>:

i The hearing aids were placed in a known variable RF field generated by the system provided by Telecom shown in Figure 2. The sound output of the hearing aid was measured in a 2 cc coupler with a B&K 2120 Frequency Analyser set for wide band with a 100 Hz high pass filter to guard against low frequency ambient noise, refer to Figure 3.

ii The noise floor of each aid was measured with the microphone blocked to ambient noise. The hearing aid output was then measured under a suitable range of field strengths, including that which produced an output 10 dB above the noise floor.

c <u>Precautions</u>:

i The measuring microphone and acoustic 2 cc coupler are large metallic objects which alter the field strength around the hearing aids. In order to obtain reasonably

accurate field strength at the aid, the 2 cc coupler and microphone were moved away from the vicinity of the aid. A 460 mm length of 2 mm diameter Tygon tubing was necessary to couple the aids to the 2cc coupler. This changed the acoustic frequency response of the aid, an example of which is shown in Figure 4. This change of response does not invalidate the measurements for the purpose of this investigation, since the bandwidth was not reduced significantly. The peak RF field strengths were measured using the apparatus shown in Figure 2. The output of the generator was varied with its attenuator in order to adjust the RF field incident on the hearing aid under test.

ii On rotating the aids in the RF field the received interference changed. However, for the purpose of this investigation, it was decided that the orientation which produced the most interference in the majority of aids would be used, since time was insufficient for a more extensive exploration and it is unlikely that significantly more useful information would have been obtained.

iii The frequency response of each aid was graphed with normal acoustic termination and also with the extra tubing using a NAL 8500 system whose calibration was checked with a B&K calibrator. This shows that the aids were operating correctly.

d <u>Tape Recordings</u>:

i The outputs of each aid was recorded with and without interference for subsequent subjective evaluation.

ii Recordings were made of the output of some of the hearing aids with test speech passages of known average SPL with and without interference to ascertain what may be deemed a suitable threshold for characterising the effect of interference. It was confirmed that a useful "annoyance" threshold is the RF field strength that causes an output 10 dB above the noise floor of the hearing aid, i.e. the output without interference and when the microphone was blocked to ambient sound. Increasing levels of interference rapidly increases the level of discomfort, e.g. when the interference was increased to 20 dB above the noise floor, the effect became unacceptable, even though the accompanying speech was still intelligible.

iii It is intended to prepare a cassette tape recording with samples of a hearing aid output with and without interference to speech.

6 Interpretation of the Results

a Interference Threshold: Table 1 shows the threshold values obtained with the hearing aids issued by AHS. Interference when the telecoil is used is slightly different to that with the microphone.

b Range of Interference: Table 2 gives an approximate indication of the relative distances at which the 10 dB threshold is reached from a 2 watt GSM hand-held mobile telephone, and from an 8 watt GSM Transportable mobile telephone. These are estimated from the hearing aid thresholds in Table 1, and by extrapolating from the peak RF field strength measurements over grass in Tables 3 and 4. As indicated in Tables 3 and 4, significant variations occur in field strengths depending on the immediate environment, however the estimated values rank the aids correctly and give a realistic indication of the range where interference will occur.

c Conditions under which Interference Occurs:

i The telephones interfere with all the hearing aids tested. A user of one of these hearing aids will not be able to use these telephones, and a hearing aid will often become useless or cause the wearer discomfort close to a telephone when it is being used. This situation is representative of currently available hearing aids. It will be noticed that the IT312 has the least interference. An explanation is given below.

ii Behind-the-Ear hearing aids experience more interference than In-the-Ear aids.

iii Hearing aids such as the VHK are likely to be unusable even several metres away from either the hand-held or the transportable telephones.

7 Interfering Mechanism

a From the experimental work we can say that the interference occurs at the most sensitive part of the hearing aid amplifier, where the RF field induces signals in the wires connected to the microphone or the telecoil and detected (rectified) by the transistor input, and possibly by the output of the microphone which has a simple buffer amplifier. This mechanism applies in high gain audio amplifiers such a those used in public address systems that are subject to AM radio and television transmissions. These are normally shielded from this interference and the input shorted by a small capacitor to eliminate the problem.

b The higher peak pulses of RF power radiated and the close proximity to the hearing aids where they will normally be used, combine to make this interference more severe than the above cases.

c Sometimes a small capacitor is used shunting the amplifier input to prevent RF signals being detected and heard by the wearer. The Calaid Sonata has a small capacitor, but is not

close to either the amplifier chip or the microphone. The Serenade, VLK and VHK/MK do not. This explains the lower threshold RF field strengths of the V aids. The new IT312 has much shorter microphone leads than the previous ITE hearing aids Sonata and Serenade, since the microphone is solidly mounted next to the amplifier board. The lower sensitivity to interference is consistent with the above mechanism.

8 Remedies

a Possible Approaches

i Filtering: The shunt capacitor is a simple filter. It should be placed physically very near the amplifier integrated circuit chip with very short wires. It may also be necessary to place one across the microphone output at the microphone. The capacitors are restricted by their affect on the circuit operation as well as taking up valuable space. By using a small ferrite inductor in series with the microphone leads in conjunction with the shunt capacitor, it may be possible to eliminate interference.

ii Shielding: Complete shielding of the whole hearing aid with a conductive sheath will eliminate the interference, but is likely to be impractical. Suitable methods include thin metallic coating on the inside of the case parts, impregnation of the plastic with fine conducting particles and using a "metallic" paint. It may reduce the sensitivity of a telecoil if fitted. It is likely to be impossible to completely shield the aid, and connecting leads for audio input and induction pickup coil (telecoil) that are not shielded would present problems.

iii Feasibility: It is not known now if these or other remedies will work and to what extent they may work.

iv Restricting the use of the new GSM mobile telephones will prevent interference, but would probably make the GSM system useless.

b Existing Hearing Aids: Changes to the large number of existing hearing aids has the following problems:

i It may be logistically difficult, if not impractical.

ii Feasible modifications are likely to be of minimal effectiveness because of the difficulty in applying effective remedial treatments to an existing product.

iii Modifications to existing aids may be very expensive.

c New Hearing Aids: If effective means to prevent interference are developed, they could be designed into new hearing aids.

9 Conclusion

a It is likely that hearing aid users will be inconvenienced to some extent very soon after the new telephones are

introduced.

b Widespread use of the new GSM mobile telephones may make existing hearing aids useless for much of the time.

c Unless there is a realistic design remedy, new hearing aids will be affected, but possibly to a lesser extent, since partial remedies seem to be possible.

d Co-operative work to investigate effective design solutions is necessary, to establish if they can be developed.

e Monitoring the uptake of the GSM service and reports of interference to hearing aid users to gauge the extent of the problem in the short term and in the longer term undertake a co-operative programme to find practical and cost effective solutions.

10 Recommendation

a Make this problem known through:

i Austel,

ii Hearing Aid user Groups,

iii Hearing Aid manufacturers,

iv Relevant government departments,

b Initiate co-operative work to look for a suitable design solution,

c Keep the above mentioned bodies informed about the extent of the GSM system and inform GSM mobile telephone users about the interference that may be caused to hearing aid users.

11 References

a European Hearing Instrument Manufacturers Association, "Implications of GSM for the hearing handicapped", Bosstraat 135, B1780 Wemmel, Belgium, Tel 32-2-460 2284, Fac. 32-2-460 42449.

b AUSTEL, "Discussion Paper: Wireless Personal Communication Services", Mobile Equipment Standards Section, AUSTEL, P.O. Box 7443, St Kilda Road, Melbourne. Victoria, 3004

Table 1 RF Field Strength for Noticeable Interference to Hearing Aids (From measurements of AHS Hearing Aids)

Hearing Aid	Microphone Switched In			Telecoil Switched In		
	RF Field (Volts/ metre)	Hearing Aid Output (dB SPL)	dB above Noise (no RF)	Threshold (Volts/ metre)	Hearing Aid Output (dB SPL)	dB above Noise (no RF)
Behind-the-Ear Hearing Aids						
PPSCL	3.1	85.5	9.5	3.1	67.0	5.0
PPSC	2.8	94.5	9.5	4.9	87.0	10.0
VHK	0.7	89.5	9.5	0.4	77.0	12.0
VLA	1.6	62.0	12.0	2.0	59.0	12.0
PPCL4	3.1	85.0	11.0	3.1	74.5	9.5
In-the-Ear Hearing Aids						
JLFR Sonata	9.4	69.5	10.0			
S Serenade	4.9	66.0	10.5			
IT312 NAL-Phox	32.3	78.0	9.5			

Table 2 Threshold Distances for Noticeable Interference to Hearing Aids (Calculated from measured aid sensitivity and approximate field strengths near the telephones)

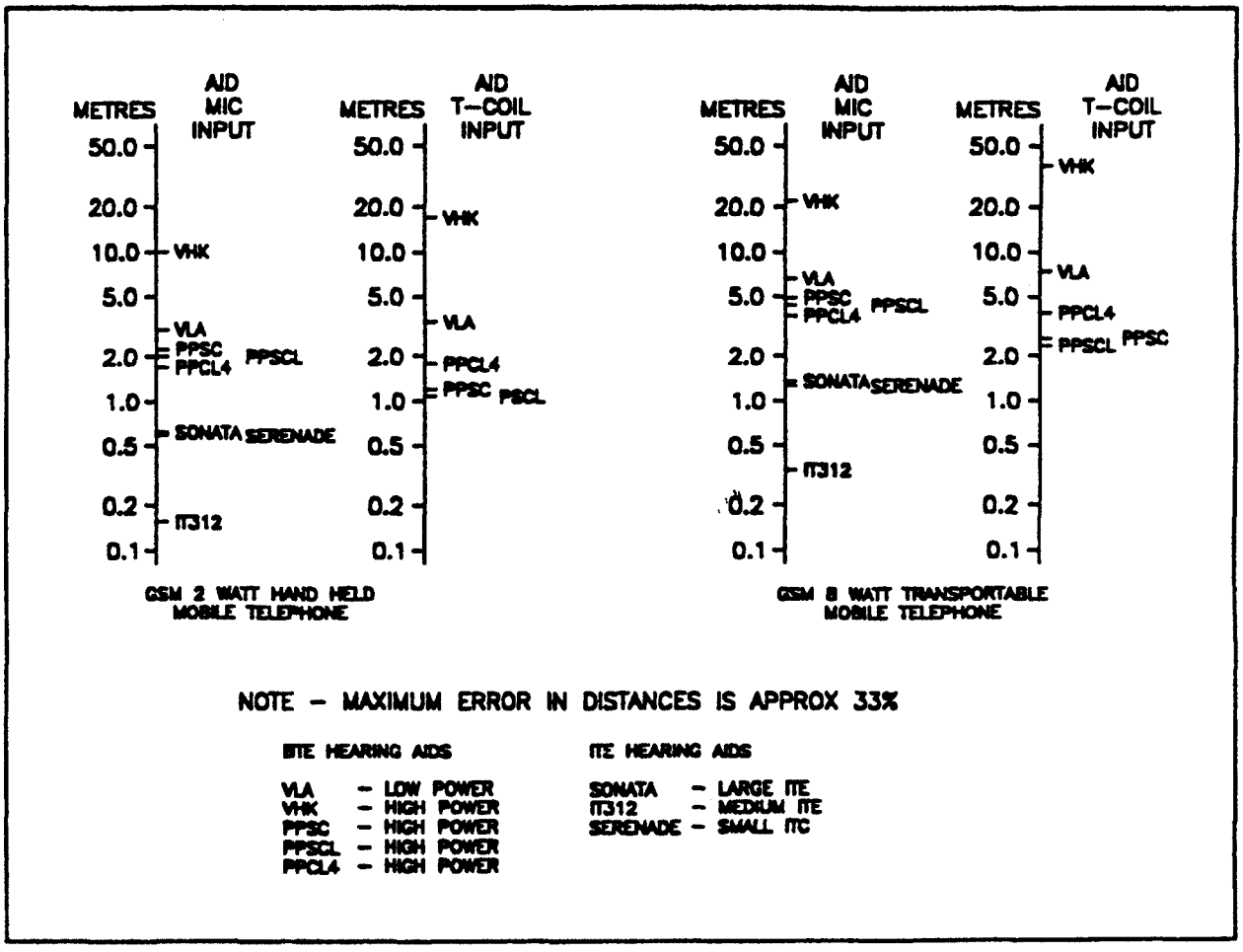

Table 3 Measured Field Strengths Near GSM 8 Watt Transportable Mobile Telephone, (Source Telecom Research Laboratories personal communication)

Distance (m)	TEST 1 - Outside Over Grass	TEST 2 - Inside Lab.	TEST 3 - Inside Lab. with Absorbers
	Field Strength (V/m)	Field Strength (V/m)	Field Strength (V/m)
0.1	81.8	76.3	
0.2	53.4	51.6	
0.3	34.9	36.9	
0.4	27.4	30.7	
0.5	21.8	23.3	25.0
1.0	12.0	12.0	12.4
1.5		10.1	
2.0	5.7	6.2	5.9
2.5		9.6	
3.0	4.0	7.5	4.1
3.5		3.4	
4.0	2.8	5.8	
4.5			
5.0	2.6		

Table 4 Measured Field Strengths Near GSM 2 Watt Hand-Held Mobile Telephone, (Source Telecom Research Laboratories personal communication)

Distance (m)	TEST 1 - Outside Over Grass	TEST 2 - Inside Lab.	TEST 3 - Inside Lab. with Absorbers
	Field Strength (V/m)	Field Strength (V/m)	Field Strength (V/m)
0.1	41.9	38.7	
0.2	28.7	27.1	
0.25	24.1		
0.3	20.8	21.3	
0.4	15.0	16.3	
0.5	13.1	14.7	
1.0	5.5	7.1	6.2
1.5	3.4	6.4	
2.0	2.4	4.1	3.0
2.5	1.7	3.5	
3.0	1.7	4.3	4.3
3.5	1.1	4.0	
4.0	1.2	2.7	
5.0	0.8		

Figure 1 Sample Frequency Spectrum of a Hearing Aid Output with Interference

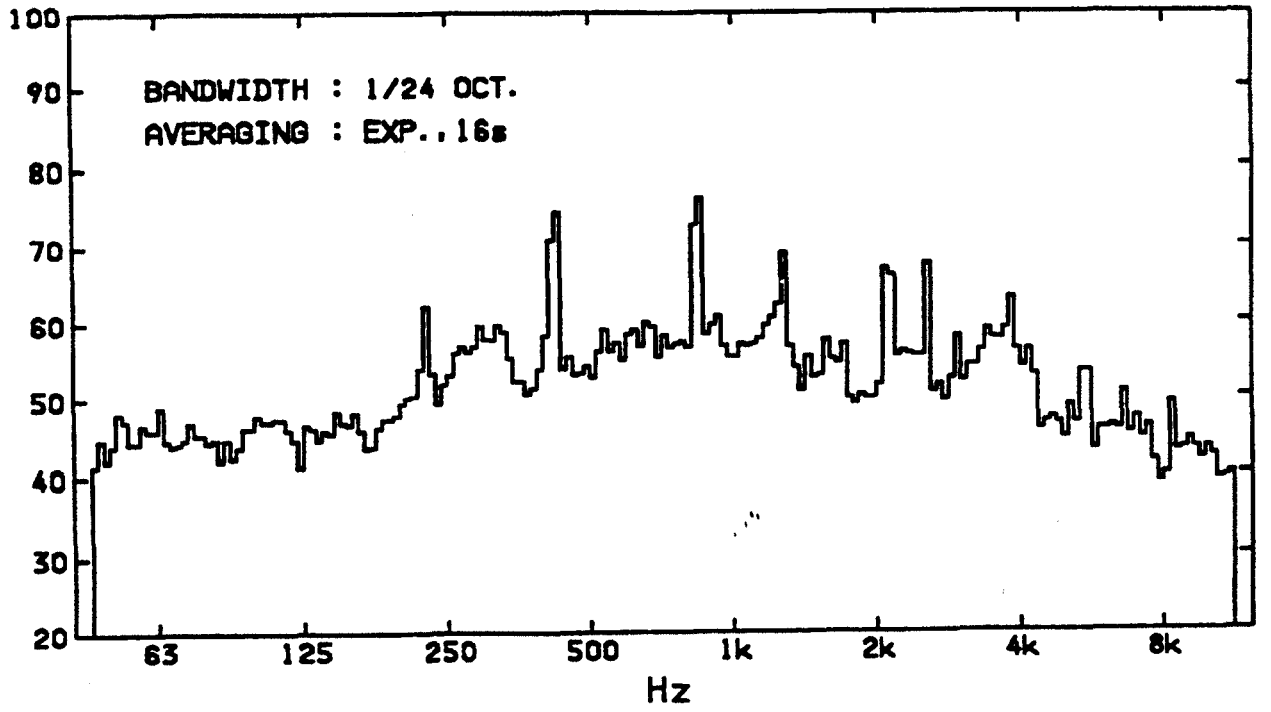

Figure 2 GSM Transmitter - Test Set-Up for Simulating Transmission

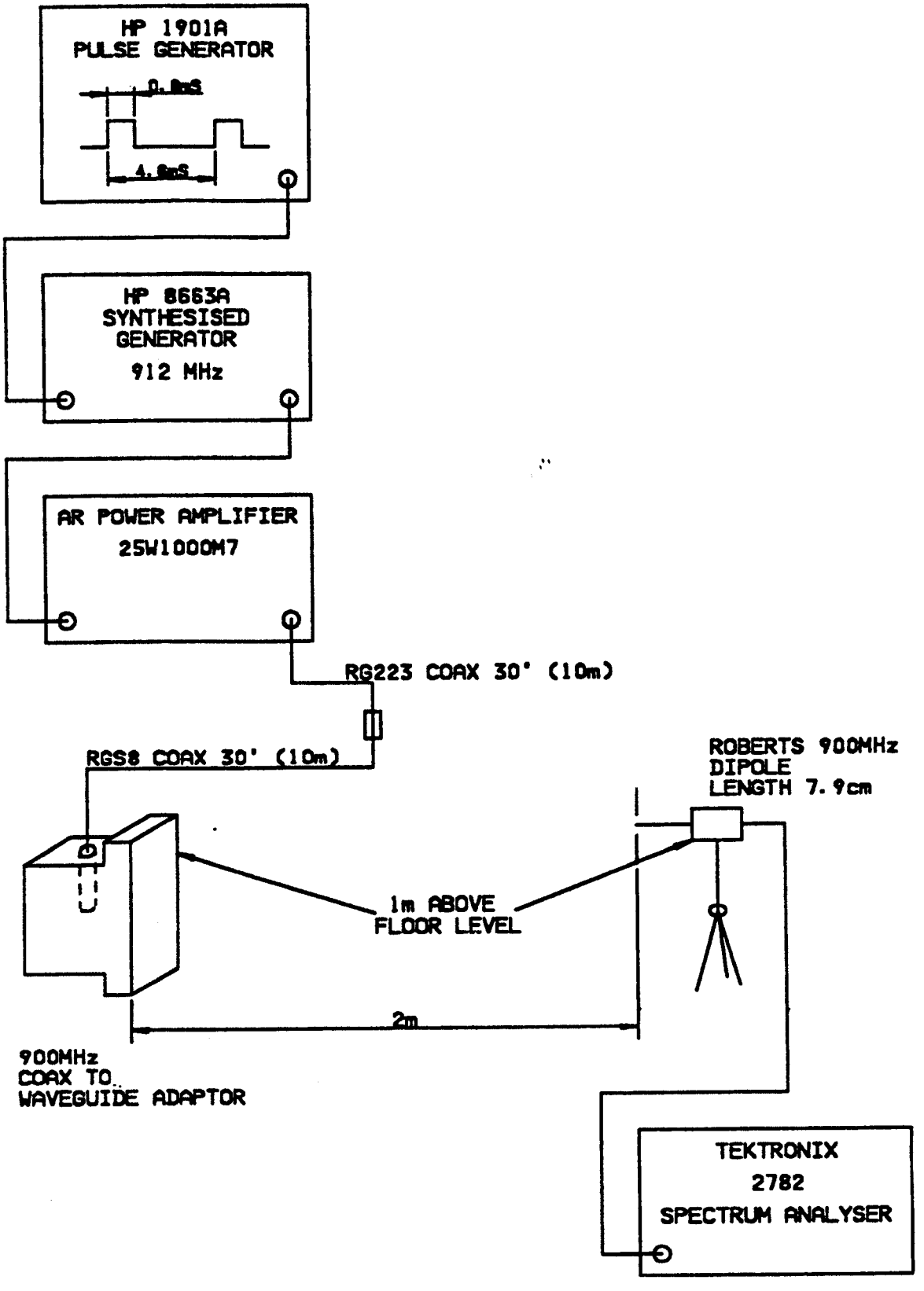

Figure 3 Hearing Aid Output with an Interfering Signal - Test Set-Up

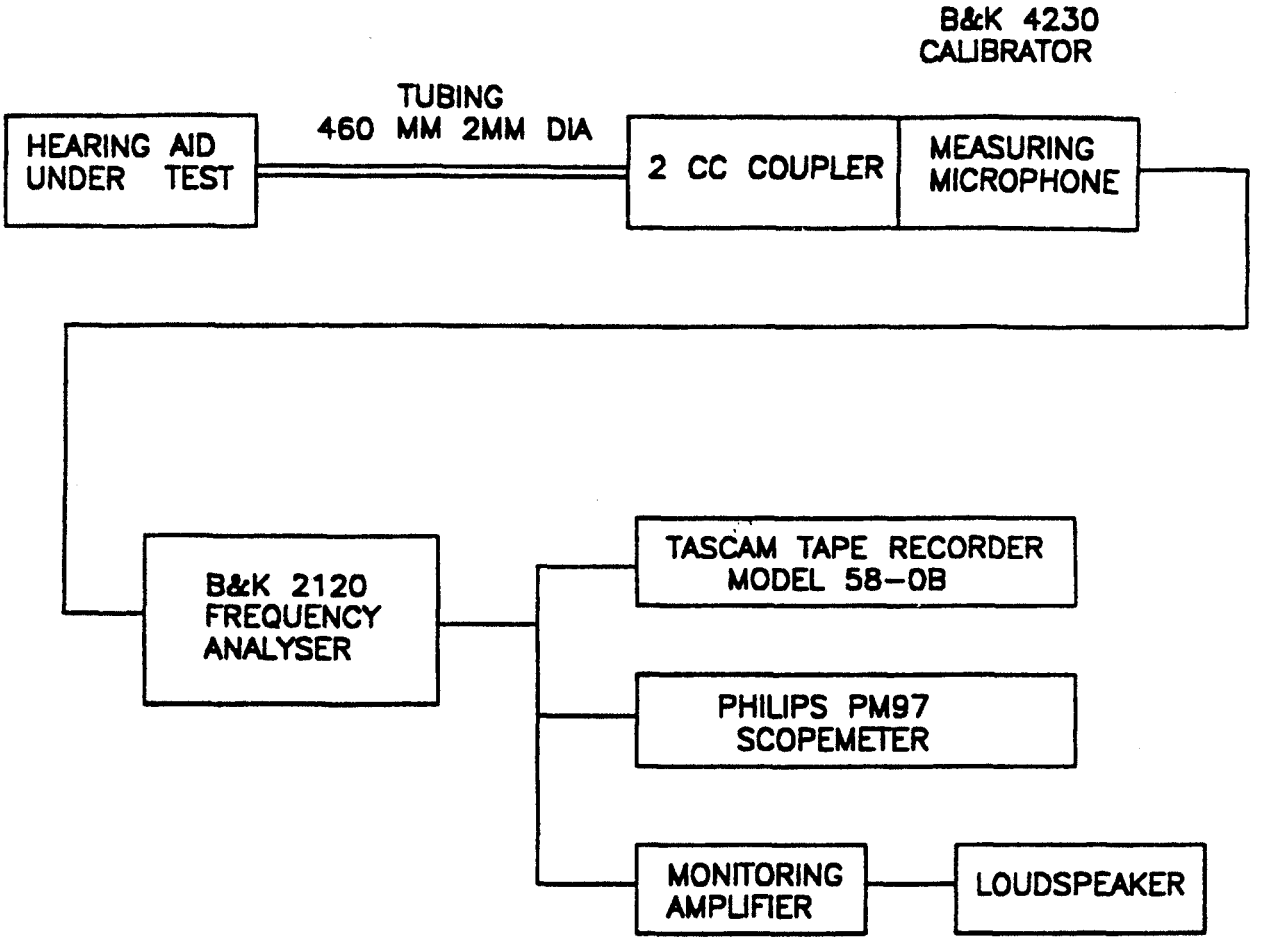
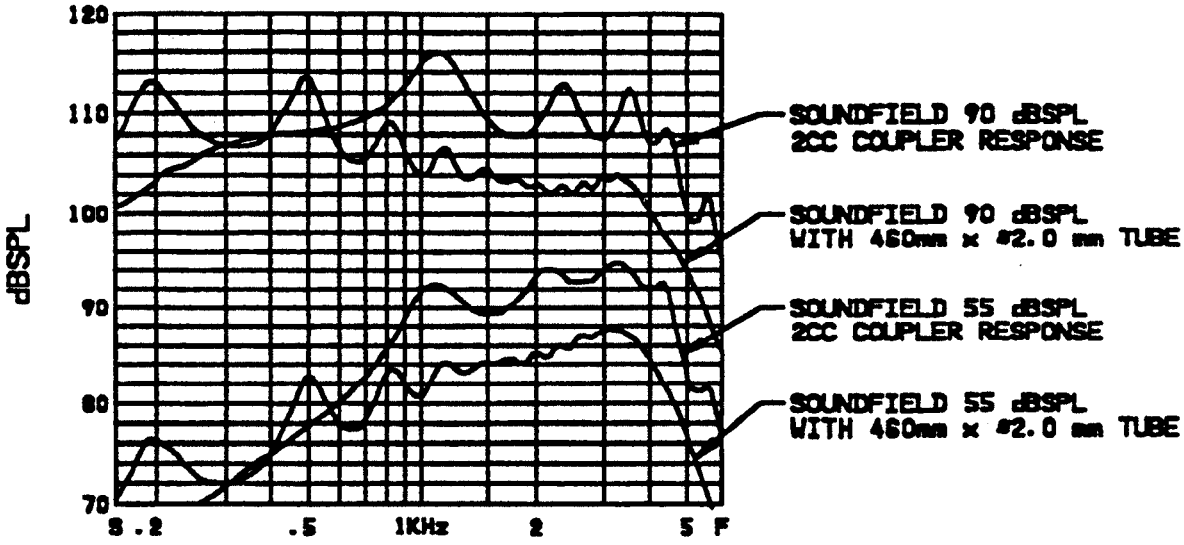
Figure 4 Sample Acoustic Frequency Response of Hearing Aid, with and without extended tube to 2cc coupler acoustic load.