Great Company Great People

Proposal for 3GPP Evolution

2004-11-02

LG Electronics

Contents

- Future Mobile Communication
- Enabling Technologies
  - Physical layer
  - Evolved RAN architecture & Protocol
- Conclusion
- WI Candidates

Future Mobile Communication

Trends

- **Convergence of two major trends**
  - Rapidly growing number of mobile users
  - Increasing need for wireless multimedia services
- **Emergence of Advanced Radio Network necessary for broadband wireless service**

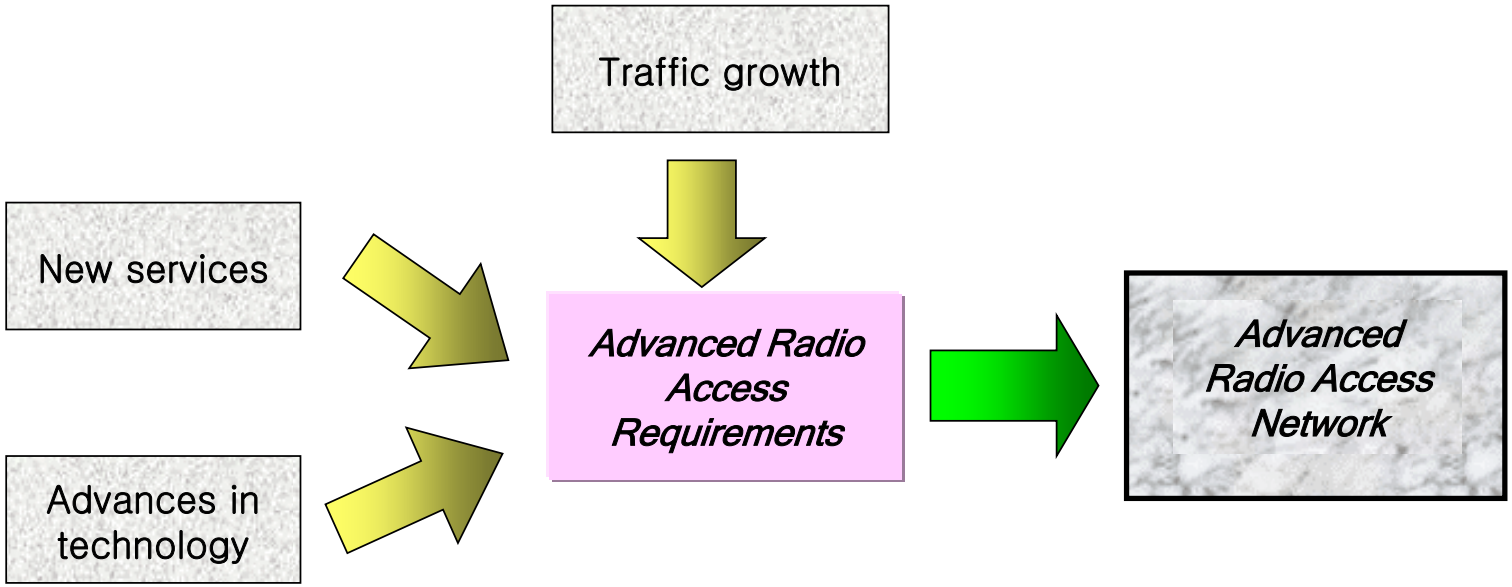

Future Mobile Communication

- **Key implication**
  - **Bandwidth limitation becomes more important factor than power limitation**
  - **Much higher data rates are provided on wider bandwidth**
  - **Infrastructure is simplified evolving toward open architecture via IP**
- **Requires**
  - **Much greater spectral efficiency: over 2~3 times**
  - **Mobile traffic at least equal to current fixed networks**
    - Average data rate: over 2 Mbps
  - **Support high-quality inter-working with other complementary networks**
    - WLAN, WWAN, Other legacy cellular network, etc.
- **3GPP RAN should evolve to satisfy future communication environment !!**

Enabling technologies

- Physical layer
- Evolved RAN Architecture and Protocol

Physical layer

❑ Necessity of Broadband wireless

- **Insufficient data rates for future mobile broadband**
  - Peak data rate in DL with HSDPA: 10.8 Mbps (15 HS-DSCH codes, 16 QAM, 3/4 code rate assumed) ≈ 2.16 bit/Hz
  - Required much higher peak data rate
    - short to medium term evolution [1]: 20-30 Mbps
    - long term evolution [1]: 100 Mbps in full mobility, 1 Gbps in low mobility
    - 10-500 MHz bandwidth is required with current spectral efficiency

❑ Requirements

- **Delivering broadband traffic on wideband spectrum**
- **Achieving high spectral efficiency**
- **Allowing various radio profiles**
- **Reducing latency**

Physical layer

- Two paths for evolution
  - Enhancement of existing technologies
  - Introduction of new technologies
- Scope of physical layer evolution

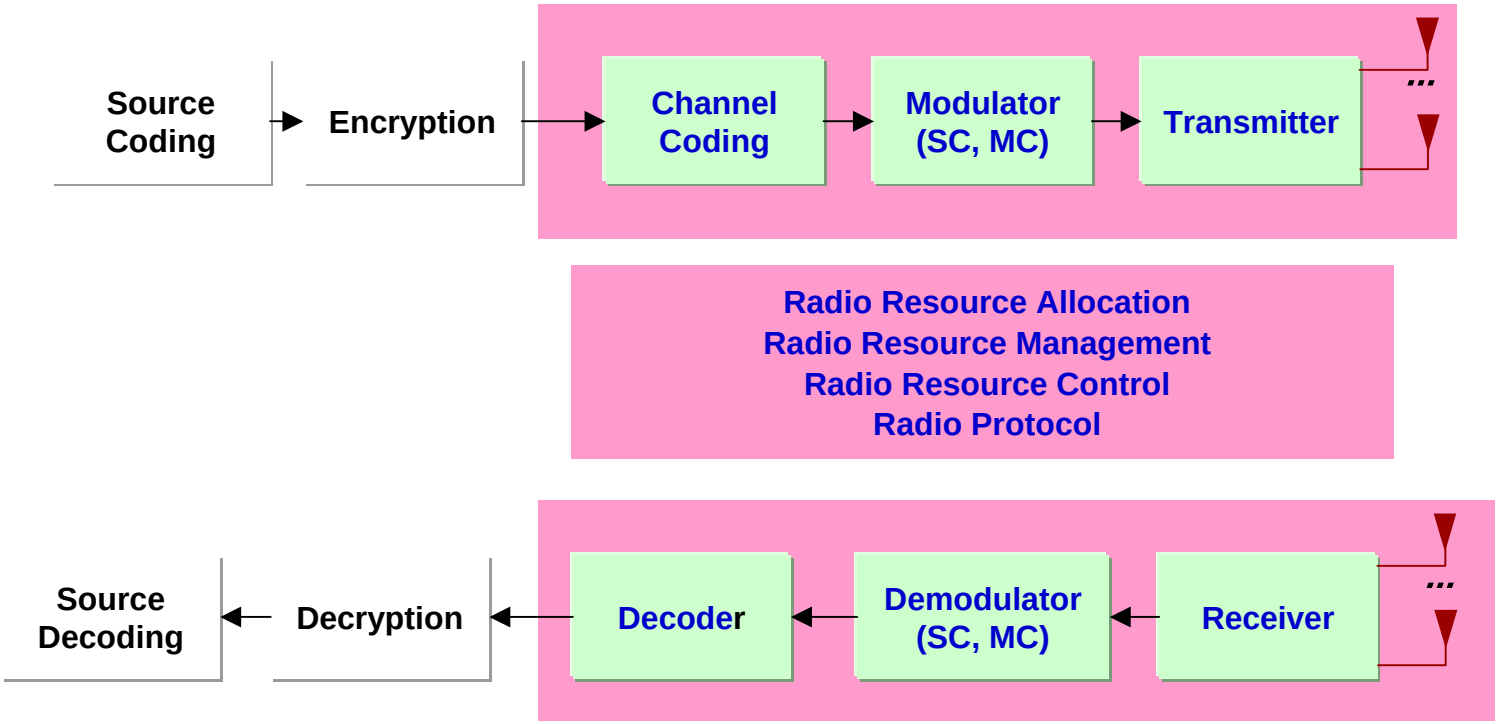

Physical layer
Multiple Access Scheme

❑ Possible approaches

- **Enhancement of existing DS-CDMA system to multiple carriers**
  - Change in the physical layer is minimized
  - Backward compatibility may be obtained
  - Radio band utilization is poor
- **Introduction of higher chip rate single carrier DS-CDMA**
  - Change in the physical layer is medium
  - Increase in the hardware complexity may be excessive as the chip rate increases
- **Introduction of multi-carrier modulation (OFDM)**
  - Physical layer should be redesigned
  - Hardware complexity can be moderate with broad band system
  - Radio band utilization can be maximized

Physical layer

Multiple Access Scheme

❑ Illustration of the three approaches

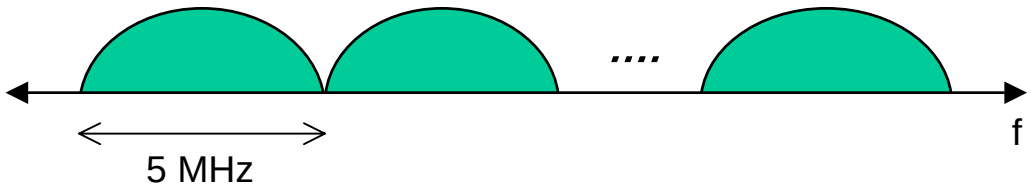

Multiple carrier DS-CDMA based on existing system

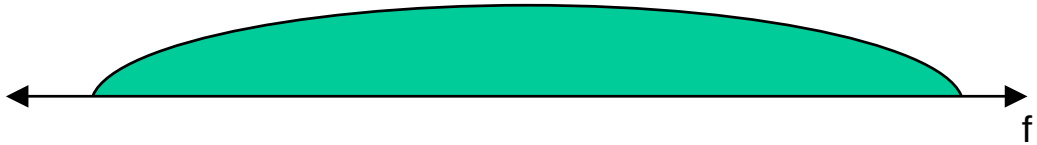

Single carrier DS-CDMA with wider bandwidth

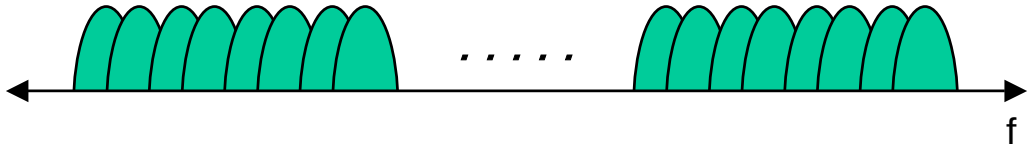

OFDM with wider bandwidth

Physical layer

Multiple Access Scheme : CDMA vs. OFDM

- OFDM seems more promising for broadband wireless service

	DS-CDMA	OFDMA/OFDM-CDMA
Spectral efficiency	1.54 symbols/Hz, typically in WCDMA with current roll-off factor	Near 2 symbol/Hz with sufficient number of subcarriers
Receiver complexity	# of fingers/taps of Rake/MMSE receiver is proportional to the bandwidth	Simple 1-tap equalizer & digital implementation using FFT
Intra-cell interference	Inherent MAI and MPI	Ideally no intra-cell interference
Inter-cell interference	Typically 65 % with WCDMA (3 sector site) [2]	Dependent on the interference handling scheme. Interference avoidance is possible when traffic load is small
User multiplexing method	CDMA	Flexible between FDMA, TDMA, CDMA
Diversity	RAKE receiver to obtaine diversity in frequency selective channel	Frequency diversity is inherent
Applicability of higher order modulation	Not suitable with wide band system due to the frequency selectivity	Suitable with wide band system due to the inherent frequency non-selectivity
Link adaptation	DCA in time domain	DCA in frequency & time domain
Cost-effective	Relatively low	Relatively High
etc		- PAR reduction scheme is required (clipping, block coding, etc…) - Uplink synchronization is required

Physical layer
Multiple antenna

- **Requirements**
  - **Consider realistic performance in practical system**
  - **Introduce technologies depending on applied channel environment**
- **Classification of candidate technologies**
  - **Spatial diversity**
    - Transmission of same data on different spatial path simultaneously
    - Suitable for the low to medium SNR and high antenna correlation
  - **Spatial multiplexing**
    - Transmission of different data on different spatial path simultaneously
    - Suitable for high SNR and low antenna correlation
  - **Hybrid of spatial diversity and spatial multiplexing**
    - Combined technique of spatial diversity and spatial multiplexing
    - Switching operation between spatial diversity and spatial multiplexing according to the link status [3]

Physical layer
Advanced coding

❑ Requirement of FEC coding

- **High performance in very low PER** for broadband wireless transmission
- **Good performance in high code rate (e.g. over R=0.67) for high spectral efficiency**
- **Low latency decoding for low delay in wireless transmission**
- **Low overhead(e.g. HARQ, AMC)**

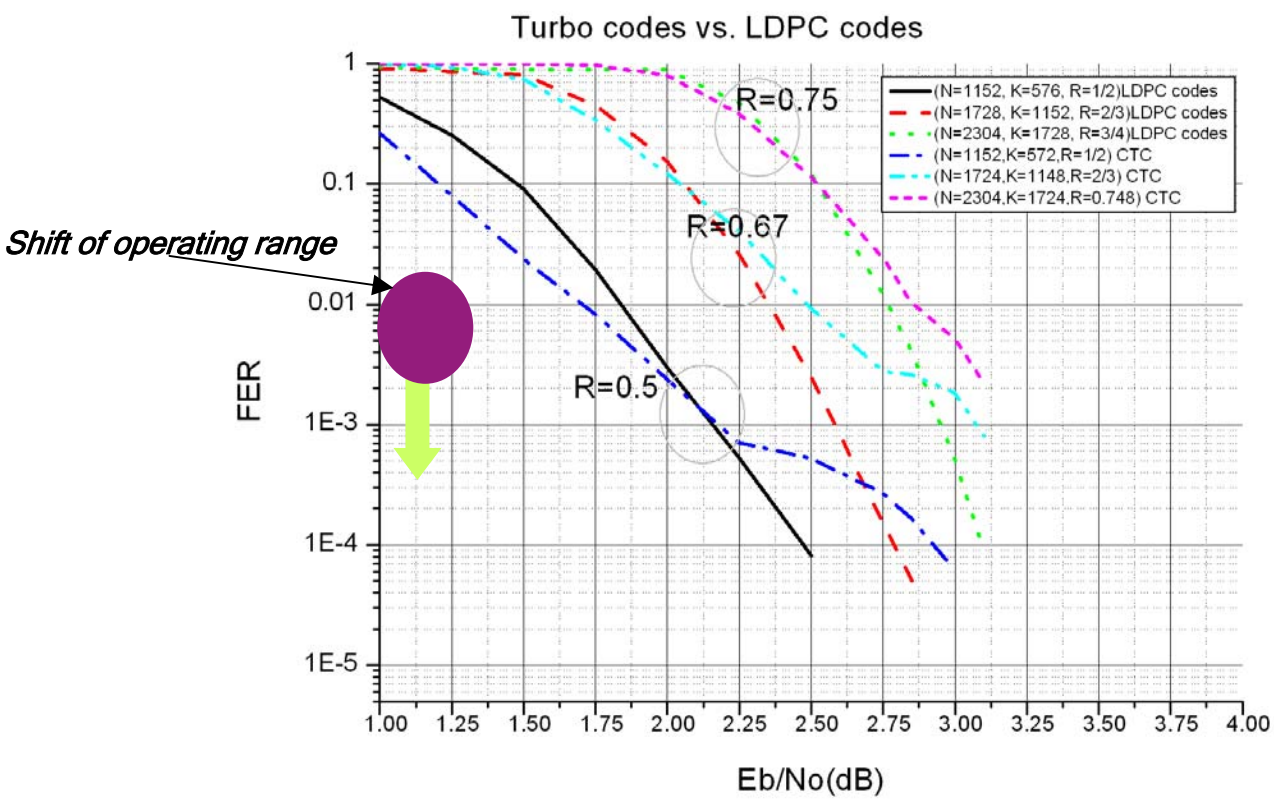

Physical layer
High dimension modulation

- **Enhanced modulation scheme**
  - **High dimension modulation for higher spectral efficiency**
    - Power consumption will be less serious as device technology is developing
    - QAM over 16 constellation can be considered
  - **Modulation diversity for OFDM**
    - Increased diversity gain with OFDM

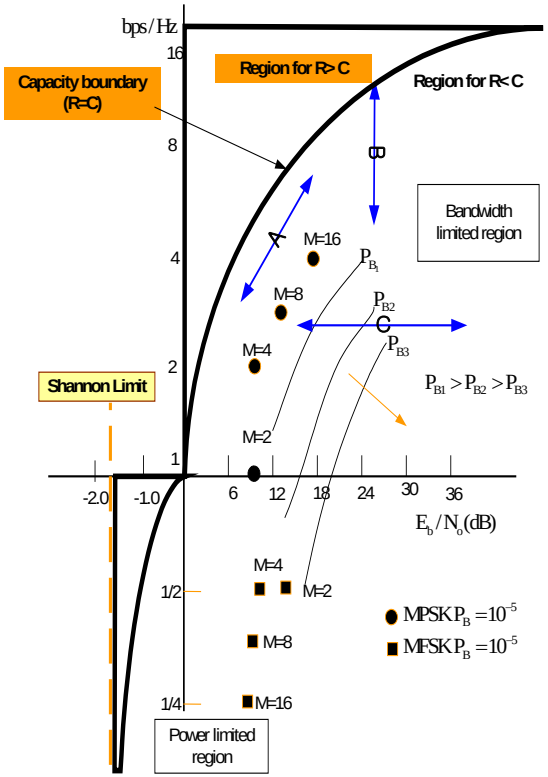

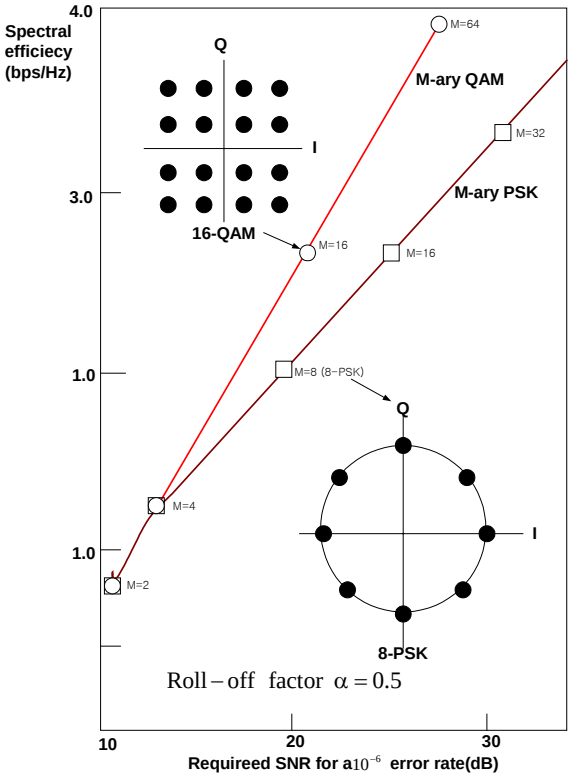

Way Forward:
Evolved RAN Architecture and Protocol

Requirements

- Fast evolution toward common IP
- Provide reduced delay in the access networks
- Accommodate user-complementary networks
- Efficiently support existing and enhanced radio-related functionality

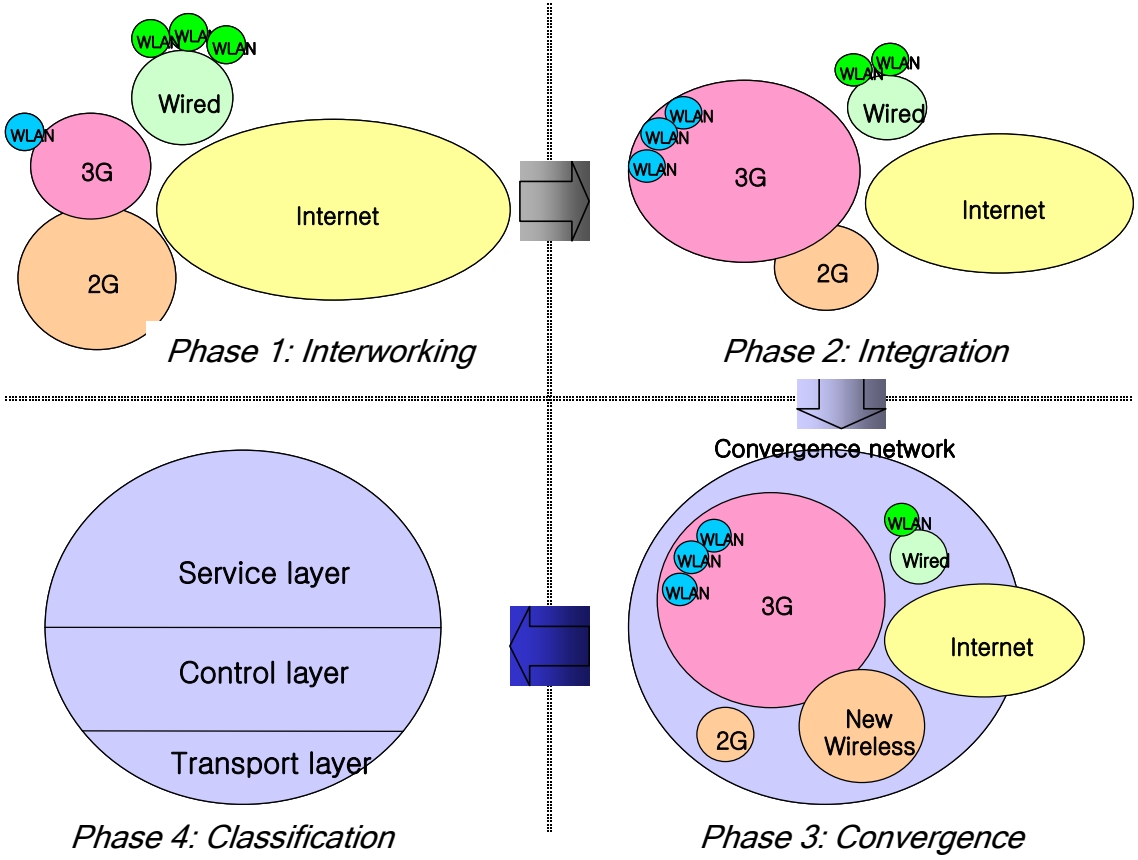

3G Harmonization –
IP Core Network Harmonization

- 3G systems on a Common IP network

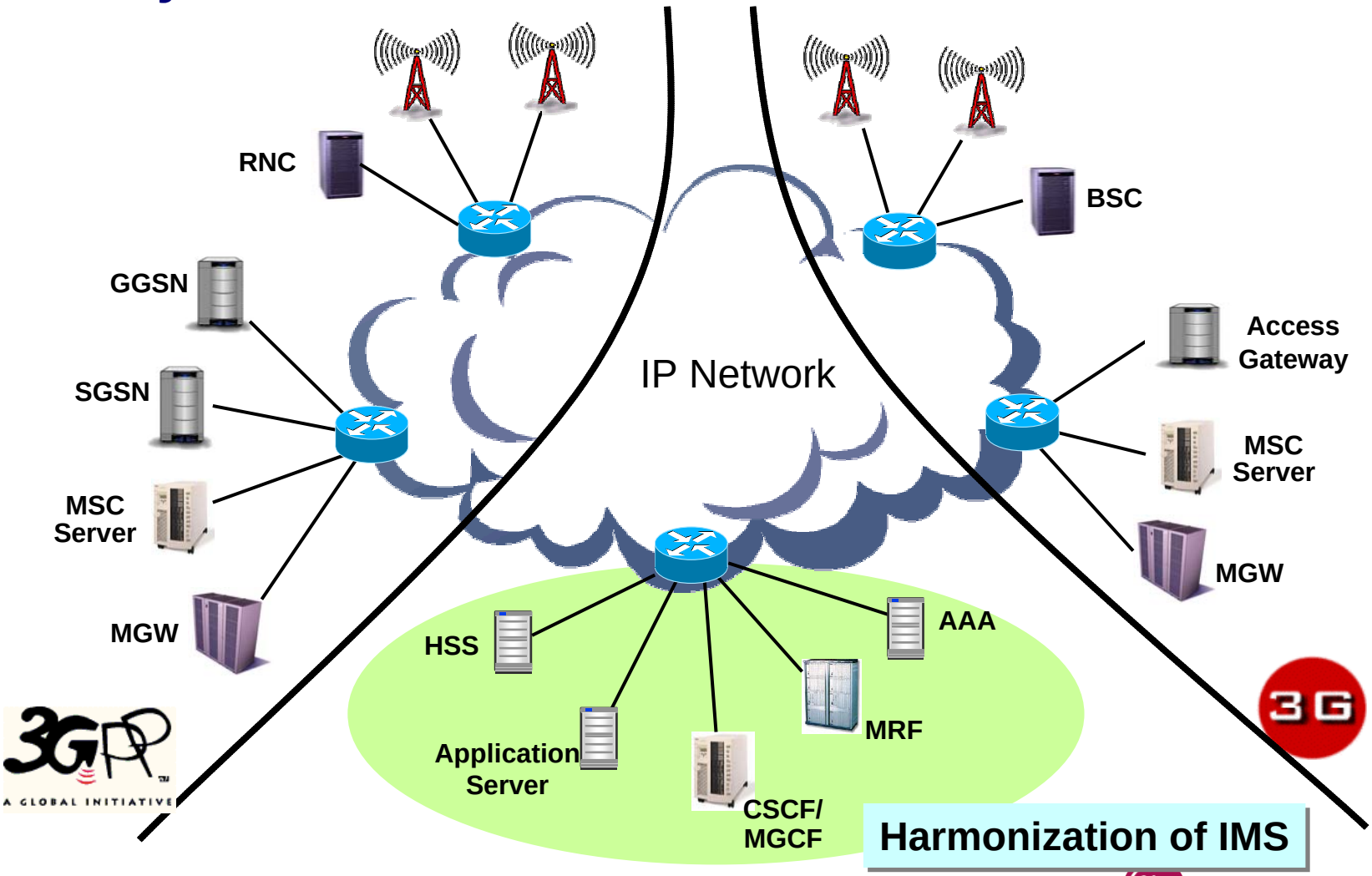

Harmonization of IMS

Evolved RAN Architecture and Protocol

Evolution toward ALL IP on 3GPP

❑ IP-RAN

Hierarchical → **IP Transport** → **IP RAN**

- point-to-point ATM
- concentration

- IP routing
- IP transport
- point-to-point Node B Link

- Node B re-parenting RNC
- Signalling/bearer separation
- Distributed RRM

R99

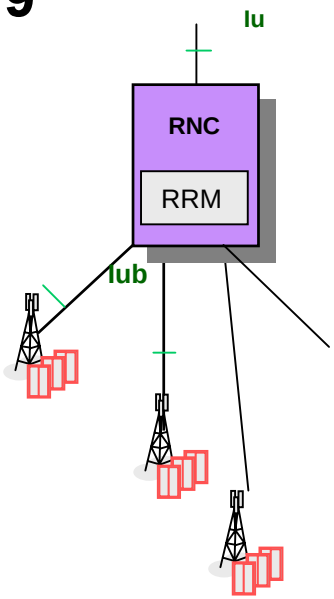

R5

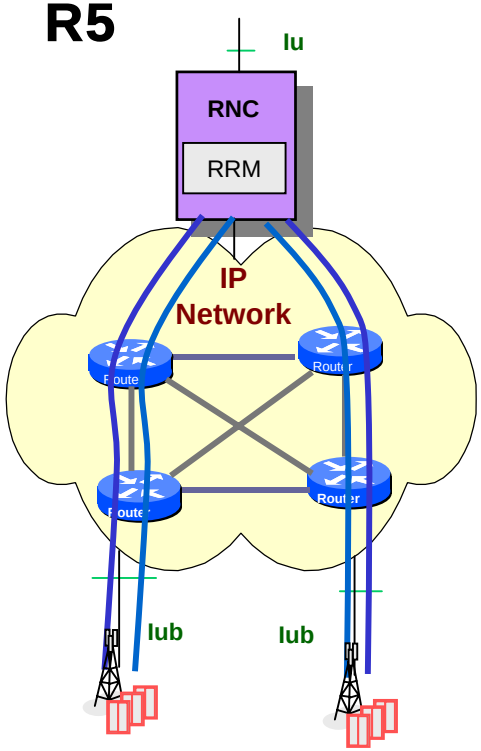

R7?

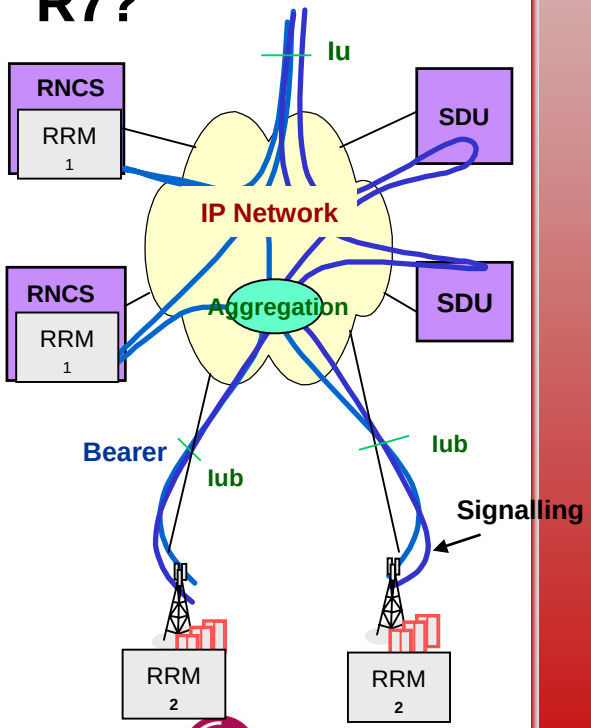

• RRM : Radio Resource Manager

Evolved RAN Architecture and Protocol

Separation of control plane and user plane

- **Apply discussions about UTRAN Evolution WI to the evolved system**
- **Motivation**
  - **Motivations have been already shown during the discussion on the UTRAN Evolution study item in RAN3. (Now on hold)**
  - **Concerns on delay caused by RNC processing in UTRAN**
  - **Need for U-plane capacity to increase faster than C-plane capacity**
- **Proposal**
  - **Introduce a direct interface between CN and Node B for user plane for new and existing band technology**
  - **Terminate Layer 2 (i.e. MAC/RLC/PDCP) in Node B to :**
    - Maximise reuse of the existing Iu/Iub/Iur interfaces for control plane
    - Maximise reuse of control functions in RNC
    - Introduce a direct interface between Node Bs for handover
    - Low Latency

Evolved RAN Architecture and Protocol

Separation of control plane and user plane

❑ User Plane Example for PS domain

- **Radio Enhancements at Node B**
  - Terminate Layer 2 (e.g. MAC, RLC) at E-Node B.
  - Reduced inter-layer redundancy (e.g. HARQ in RLC and MAC)
  - Support of broadband multimedia service on E-Node B
  - Layer 2 further optimized for emerging services.

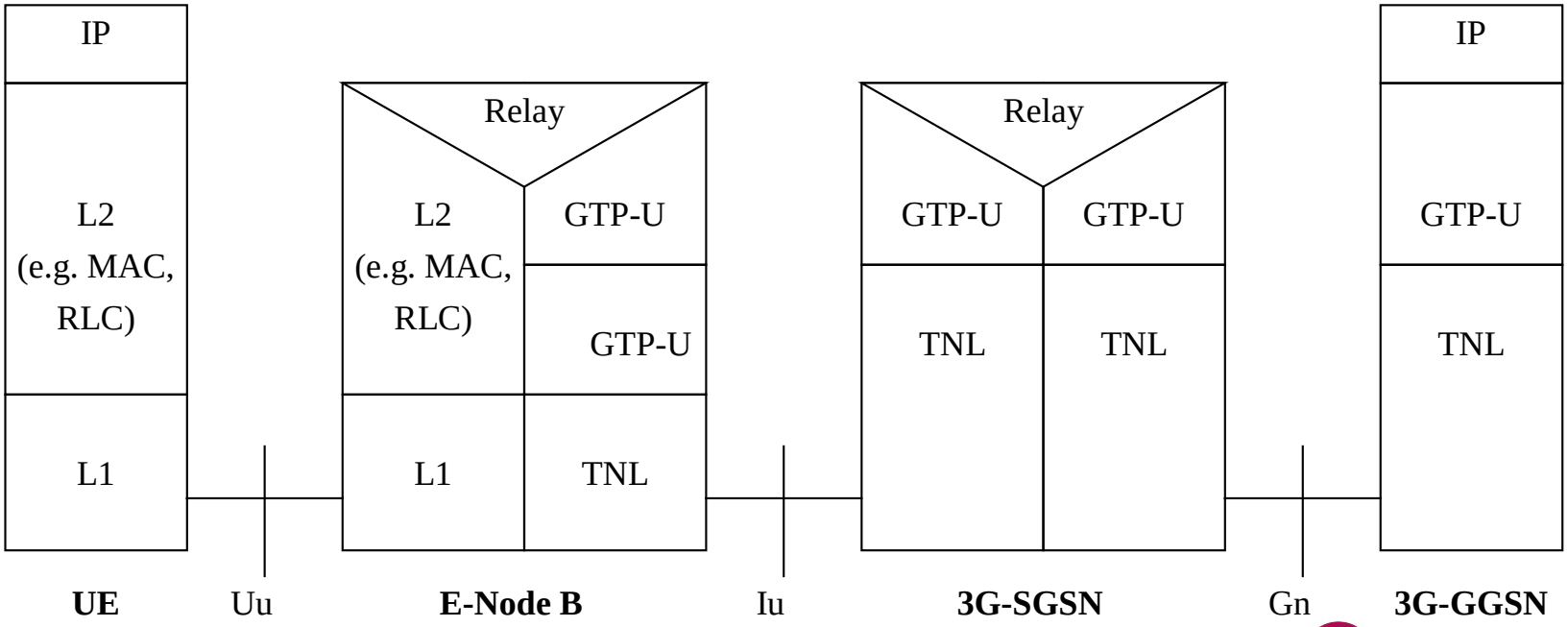

Evolved RAN Architecture and Protocol

Separation of control plane and user plane

❑ Control Plane Example

- **Intelligent Node B & Simple RNC**
  - New distribution of some RRC functions from RNC to E-Node B. (e.g. user-specific functions)
  - Signaling improvements (e.g. fast control of radio bearers)

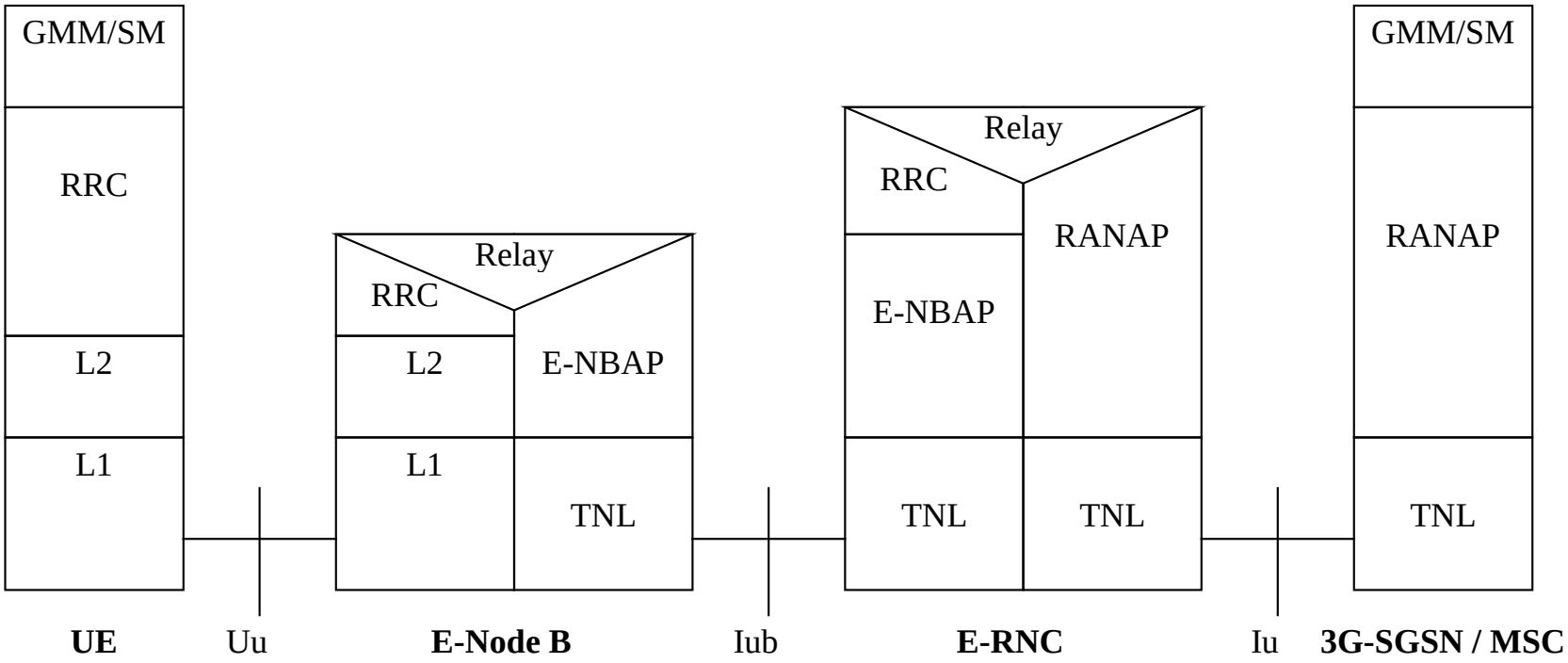

Evolved RAN Architecture and Protocol

Enhanced RAN Architecture

❑ Overall Architecture

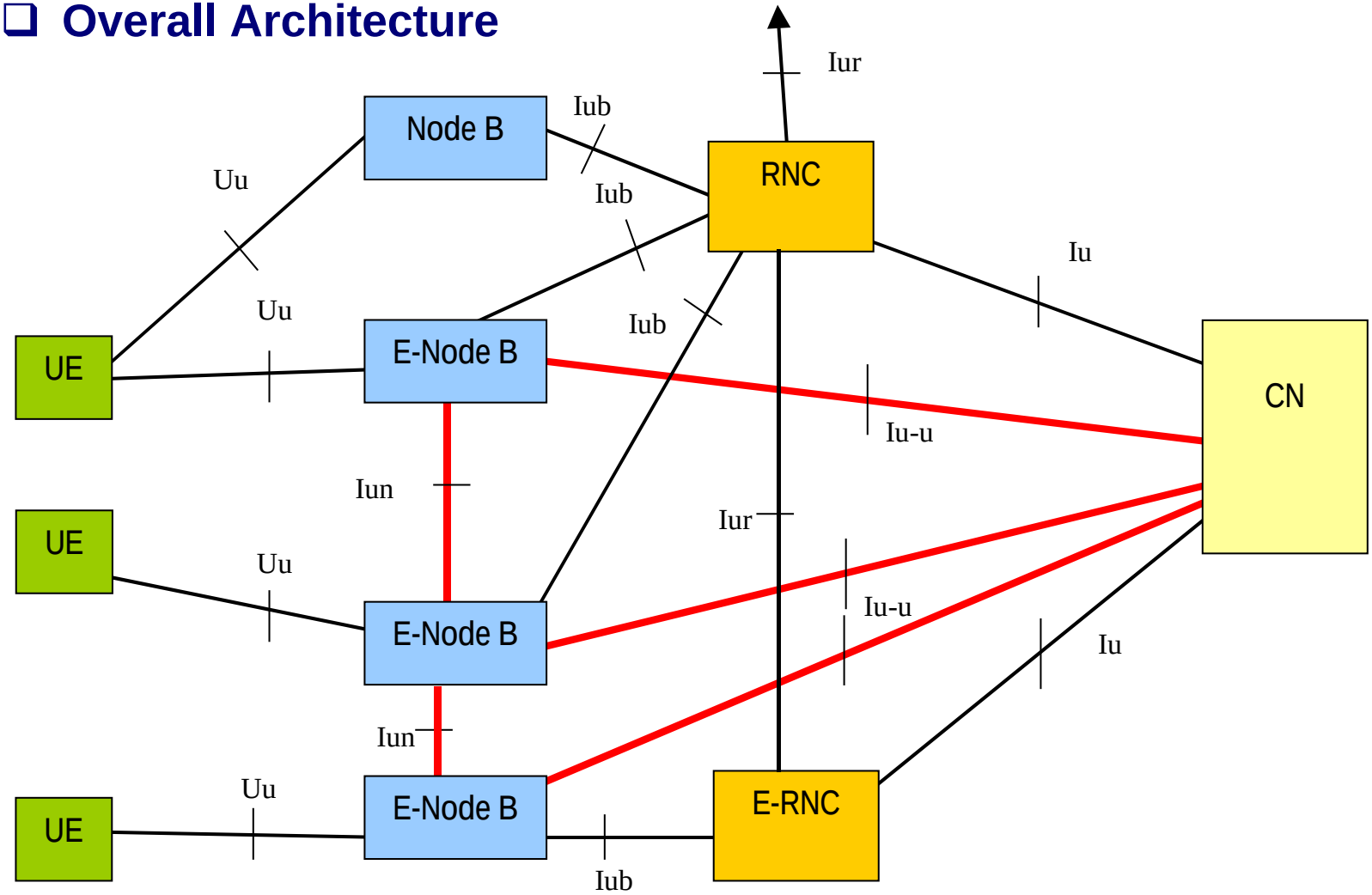

Evolved RAN Architecture and Protocol

Enhanced RAN Architecture

❑ New Interfaces for Enhanced RAN

- **Maximize Reuse of the existing interfaces**
- **New interfaces:**
- **Iu-u**
  - Interface between CN and E-Node B for User Plane
- **Iun**
  - Interface between E-Node Bs for seamless service
- **Enhancements to the existing interfaces for additional control functions, i.e. Uu, Iu, Iur, Iub**

Evolved RAN Architecture and Protocol

High Speed Multicast System

- **Motivation**
  - **Service limitations of the current MBMS in the aspect of**
    - Capacity
    - Data Rate
    - Lack of QoS consideration
- **Proposal**
  - **Consider multicast service with a new frequency band and radio technology**
  - **Apply high speed mechanisms such as HSDPA for multicast transmission**
  - **Facilitate cooperation between multicast channel and dedicated channel**
  - **Improve QoS for multicast transmission e.g. with uplink feedback**
  - **Take into account cooperation with the current MBMS framework.**

Conclusion

- **Multi-carrier based physical layer is required for accommodate broadband service on wide spectrum**
- **All technologies considered should be their spectral efficiency**
- **Optimized architecture and protocols are required in RAN for the support of future All-IP common network**
- **Possible WIs**
  - **Short term**
    - Introduction of OFDM technology for a wider bandwidth (10~20 MHz)
    - Enhancement of Radio link performance based on OFDM
    - Rearrangement of RAN Functions
    - Split of Control Plane and User Plane in RAN
    - Distributed Radio Protocol & Signaling Functions
  - **Mid-term to long term**
    - Introduction of broad band system (>20MHz)
    - Enhanced Multicast Transmission

Candidate WIs

- **Physical Layer**
  - **Introduction of OFDM technology for a wider bandwidth**
    - 10 to 20 MHz bandwidth for short term evolution
    - Bandwidth wider than 20 MHz for mid-term to long term evolution
  - **Enhancement of radio link performance for high spectral efficiency**
    - Multiple antenna techniques related to OFDM
    - Enhanced channel coding and modulation
- **Protocol and Signaling**
  - **Distributed Radio Protocol & Signaling Functions**
    - Moving some RRC functions from RNC to Node B
    - Most of Layer 2 Radio Protocols at Node B
  - **Enhanced Multicast Transmission**
    - Introduction of a new technology for more capacity and data rate
    - QoS Improvement for multicast transmission

Candidate WIs

❑ RAN architecture

- **Split of Control Plane and User Plane in RAN**
  - Consider different requirements between signaling and user traffic
  - Define a new interface between CN and Node B for User Plane
- **Rearrangement of RAN Functions**
  - Simple RNC only for some control functions
  - Enhanced Node B with more cell/user specific functions

References

[1] 3GPP TR21.902, Evolution of 3GPP system

[2] Jaana L. et all, Radio network planning and optimisation for UMTS

[3] Severline C. et all, ‘Adaptive modulation and MIMO coding for broadband wireless data networks’