RWS-120005

Views on Release 12

Orange

3GPP RAN Workshop on Release 12 and onwards

Ljubljana, Slovenia, 11 – 12 June 2012

Agenda Item: 2

Document for: Information

unrestricted

Outline

- Requirements
- Techniques for LTE
- Roadmap considerations

Requirements

The focus is on LTE evolutions, unless explicitly stated

Enhanced spectrum efficiency

- Enhanced spectrum efficiency (SE) is crucial to increase capacity and user experience within the operator's sites and spectrum constraints

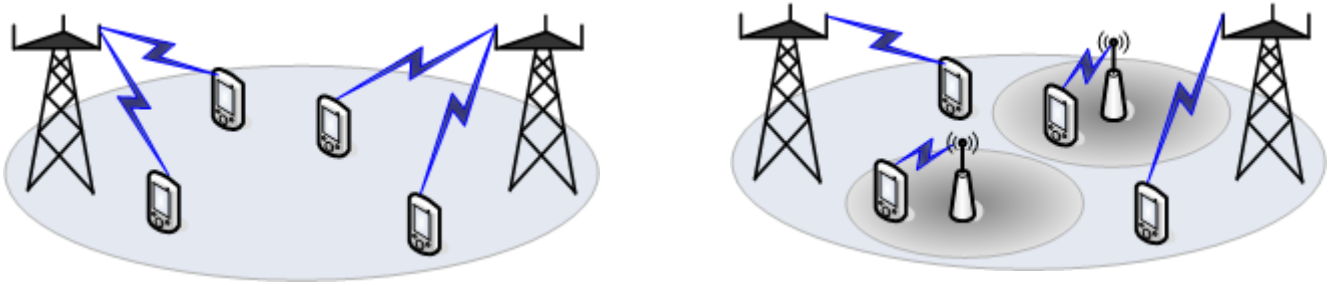

- Macro cells remain the core operators deployment
  - SE enhancements are important to make the most of the existing sites
- Macro cells will need to be complemented with small cells
  - Small cells SE is key to maximize the benefit of each new site
  - in homogeneous and heterogeneous deployments
- For all scenarios, cell and cell-edge spectrum efficiency enhancements need to be targeted

Optimisation of Het Nets performance

LTE & HSPA

- Small cells will become unavoidable for capacity increase for HSPA and LTE
  - The need is expected first for HSPA networks, foreseen to saturate before LTE networks due to progressive LTE devices penetration
- Possible deployments
  - under the same carrier as the macro in short-term (Rel-11/12, HSPA/LTE)
  - under a different carrier as the macro (3.5 GHz) in medium-term (Rel-13, LTE)
  - Imperfect backhaul (20 ms latency) should be assumed, as point-to-point fiber will not be available everywhere
- Optimised interworking with the macro is required for small cells efficiency
  - system capacity and cell-edge user throughputs (interference coordination)
  - mobility (handovers optimisation)
- Specification enhancements are especially needed for HSPA
- Improvements for small cells support in LTE should continue

Cooperation between LTE/HSPA and WiFi

- WiFi is an attractive solutions for macro offload
  - especially for hot spots, as low power nodes are expected to support both LTE/HSPA and WiFi
- Cooperation mechanisms between LTE/HSPA and WiFi could be beneficial to enhance the user experience and WiFi offload efficiency, by e.g.
  - facilitating inter-system handovers
  - providing control to the network on the technology to use for a UE
  - flow selection/aggregation, depending on the associated complexity
- Cooperation mechanisms at RAN level should be studied
  - priority should be on LTE

Energy efficiency

LTE & HSPA

- Energy represents a significant share of operators' OPEX, so energy efficiency should be accounted for in any LTE/HSPA evolution, at network and UE side

Easier network operation, tolerance to failure

LTE & HSPA

- The efforts towards ease of deployment, configuration and optimisation of the network should be continued to alleviate operational costs
  - for small cells
  - for new features when applicable, e.g. active antennas
- Resilience to potential network failures should be explored

Efficient support of diverse traffic characteristics,

- Smartphones and MTC devices can generate specific traffic patterns, which should be efficiently supported

Techniques for LTE

Vertical sectorization/3D beamforming via AAS

- Active antennas products are arriving on the market, and are studied in RAN4 for testing methodology
- AAS introduce the vertical dimension in MIMO, which can be exploited for single-point and multi-point (CoMP) transmission
  - Initial studies show high gain potential [1][2]
  - The gain can apply to macro and small cells
- Physical layer standardization most likely needed only for dynamic 3D beamforming
- Vertical sectorisation could benefit from higher layers mechanisms (e.g. SON)

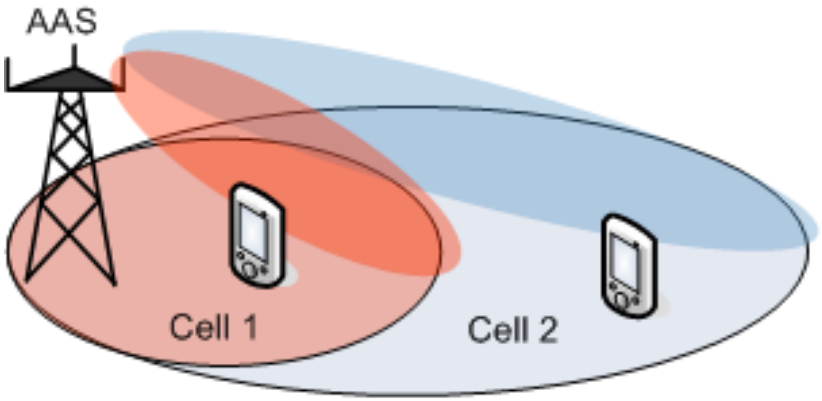

(Semi-)Static vertical sectorization

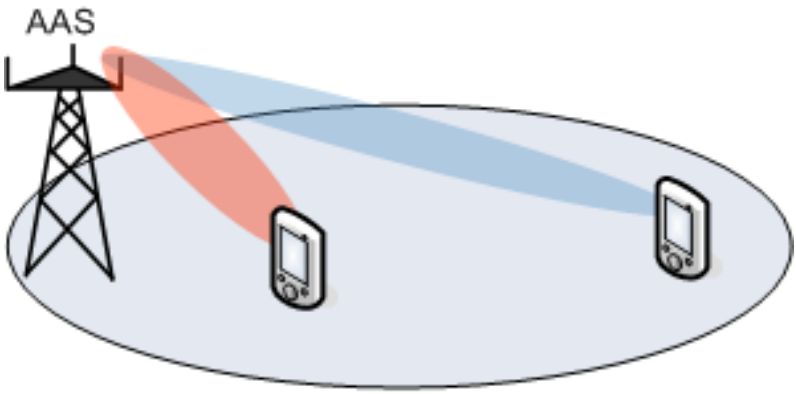

Dynamic 3D beamforming

[1] ARTIST4G D1.2 - Innovative advanced signal processing algorithms for interference avoidance, Dec. 2010
[2] ARTIST4G D1.4 - Performance assessment of the most promising interference avoidance techniques, June 2012

Advanced receivers and joint Tx/Rx optimisation

- The UE receiver is essential for the overall system performance
  - receiver gains are beneficial in macro and small cells
- There is a clear trend in LTE to enhance UE receivers performance
  - performance requirements for IRC for PDSCH and interference cancellation (IC) for CRS are being specified in RAN4 in Rel-11
  - the next step is interference cancellation for PDSCH
- Further performance benefit can be expected from tighter interaction between transmitter and receiver [3][4]
  - e.g. the interference is shaped by the transmitter so that it can be efficiently processed by the receiver
  - a promising concept in this framework is network assistance for IC receivers

[3] ARTIST4G D2.4 - Flexible interference control concepts, Oct. 2011
[4] ARTIST4G D2.5 - Flexible interference control evaluations, June 2012

Network assistance for IC receivers

- For inter-cell/inter-point interference
- For single-point MU-MIMO interference

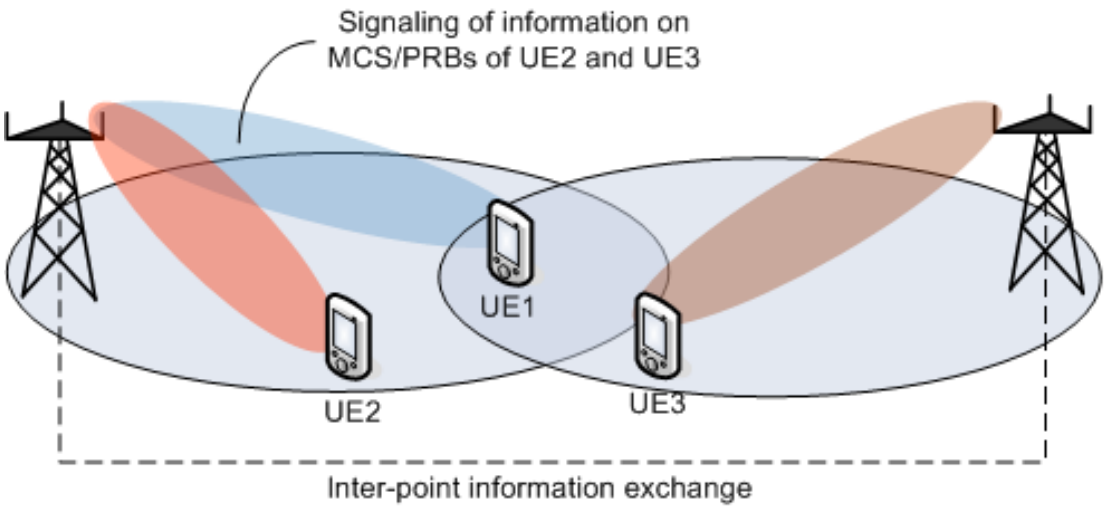

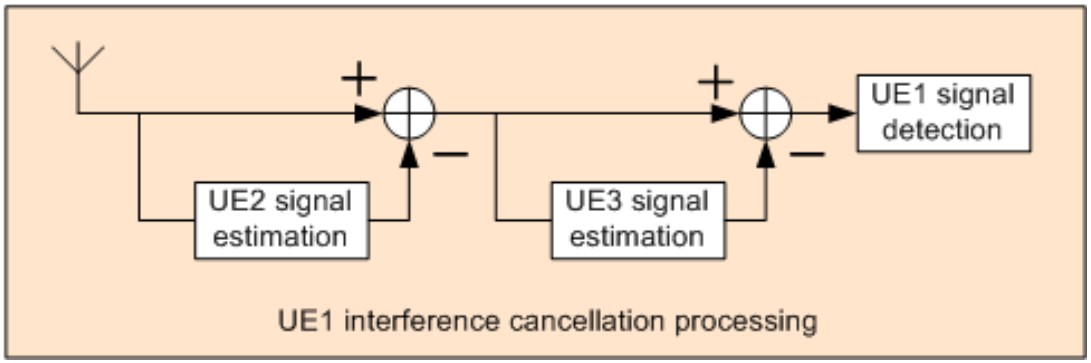

Network assistance for IC receivers

- System-level results for
  - DL, 10 MHz, ITU UMa, 3 km/h, 10 UEs/cell (75% indoors) 2Tx/2Rx, X-pol
  - baseline receiver is MMSE-SIC for SU-MIMO, realistic link adaptation
  - cancellation of N dominant inter-cell interferers (20% residual power after IC)
  - IC is assumed to be always possible, with no scheduling restriction (idealistic)
    - these results provide an upper bound of the achievable performance

Full buffer results

No IC / IC	Capacity (Mbps)	Cell-edge user throughput (Mbps)
No IC	15.5 (0%)	0.38 (0%)
IC, N=2	26.4 (+70%)	0.63 (+66%)

high gain potential!

Non full buffer results

Capacity = cell throughput for 2 Mbps cell-edge UE throughput

Parameter	No IC	IC, N =1	IC, N=2
Capacity (Mbps)	9.04	11.3	14.1
Gain	0 %	25 %	56 %

Network assistance for IC receivers

- Issues/solutions
  - Interference cancellation complexity
    - MMSE-SIC was assumed for the Rel-8 MIMO design and will hit products at some point in time. Complexity is the same whether the MIMO layers belong to the same or different UEs
  - Time synchronization of the network
    - assumed for CoMP
  - Other cells/transmission points' channels have to be estimated
    - Enabled for CoMP, via CSI-RS + DMRS
    - possible via CRS, due to their high density
  - The DMRS port, MCS, PRB and RNTI of the interferers have to be known by the victim for channel decoding
    - requires new signalling to the UE ← standard impact
  - The MCS of the interferer has to be decodable at the victim
    - can be ensured by inter-point coordination (by implementation)
  - The number of PRBs should be balanced between victim and interferer
    - can be ensured by inter-point coordination (by implementation)

Other identified techniques for LTE

- Enhanced spectrum efficiency
  - eMBMS enhancements
- Optimisation of Het Nets performance
  - CoMP enhancements for imperfect backhaul based on the principles of HSPA multiflow (similar to carrier aggregation)
- Easier network operation, tolerance to failure
  - SON for Het Nets
  - SON for Active Antennas Systems
  - Further MDT enhancements
- Energy efficiency
  - Stand-alone new carrier type

Roadmap considerations

Roadmap considerations

- Duration of Rel-12
  - 18 months seem a good target (24 months are also possible)
- Work planning
  - the main SI/WIs should be planned from the beginning
    - i.e. those expected to deliver the most meaningful enhancements and consume the largest amount of resources
    - other shorter SI/WIs could be accepted during the release, if workload allows

thank you

Appendix

Simulation assumptions

Parameter	Value
Carrier	FDD downlink, 2 GHz
Bandwidth	10 MHz
Network layout	19 tri-sector macro sites with wrap-around, 500 m ISD
Channel model	ITU Uma, 3 km/h
Penetration loss	20 dB for indoor UEs, 0 dB for outdoor UEs
UEs distribution	Uniform, 75% UEs indoors, 10 UEs/cell for full buffer
Traffic models	Full buffer FTP model 1 in TR 36.814
Antennas	2 Tx X-pol, 2 Rx X-pol
MIMO scheme	SU-MIMO with adaptive number of layers
Feedback	PUSCH 3-1 with 5 ms duty cycle
UE receiver	MMSE-SIC with IRC for SU-MIMO w/wo inter-cell interference cancellation up to 2 interferers
Interference modelling	Fully modelled from 57 cells
Channel estimation	Ideal
Scheduling	Proportional Fair, frequency selective
HARQ	Explicit with 4 transmissions maximum