3G Repeater NRM WID-Use Case

China Mobile

Contents

- Repeater overview
- Repeater principle
- Repeater category
- OMC
- NBI for OMC and NMS
- 3GPP protocols

What is the Repeater?

- **Repeater definition**
  - A device that receives, amplifies and transmits the radiated or conducted RF carrier both in the down-link direction (from the base station to the mobile area) and in the up-link direction (from the mobile to the base station)
  - Repeater products provide cost-effective coverage solutions for airports, railway stations, tunnels, convention centers, canyons, and other environments where structures or natural obstructions interfere with signals.
  - A range of low noise and reliable repeaters to enhance signal for mobile systems from GSM, CDMA to the 3G bands.

How can we use the repeater?

- **Repeater application**
  - **Increase service area, and eliminate the blind spots, such as the area in the shadow of mountains, buildings, trees, tunnels etc;**
  - **Improve the signal strength and increase the coverage in rural area；**
  - **Set up repeater along high way, improve the hot spots coverage efficiency；**
  - **Resolve the indoor coverage problem, such as blind spots in large building, subway and tunnel etc；**
  - **Transfer signal from BS of idle cell to BS of busy cell in order to optimize the network coverage；**
  - **Provide signal to the area where the normal signal can not penetrate through.**

Overview

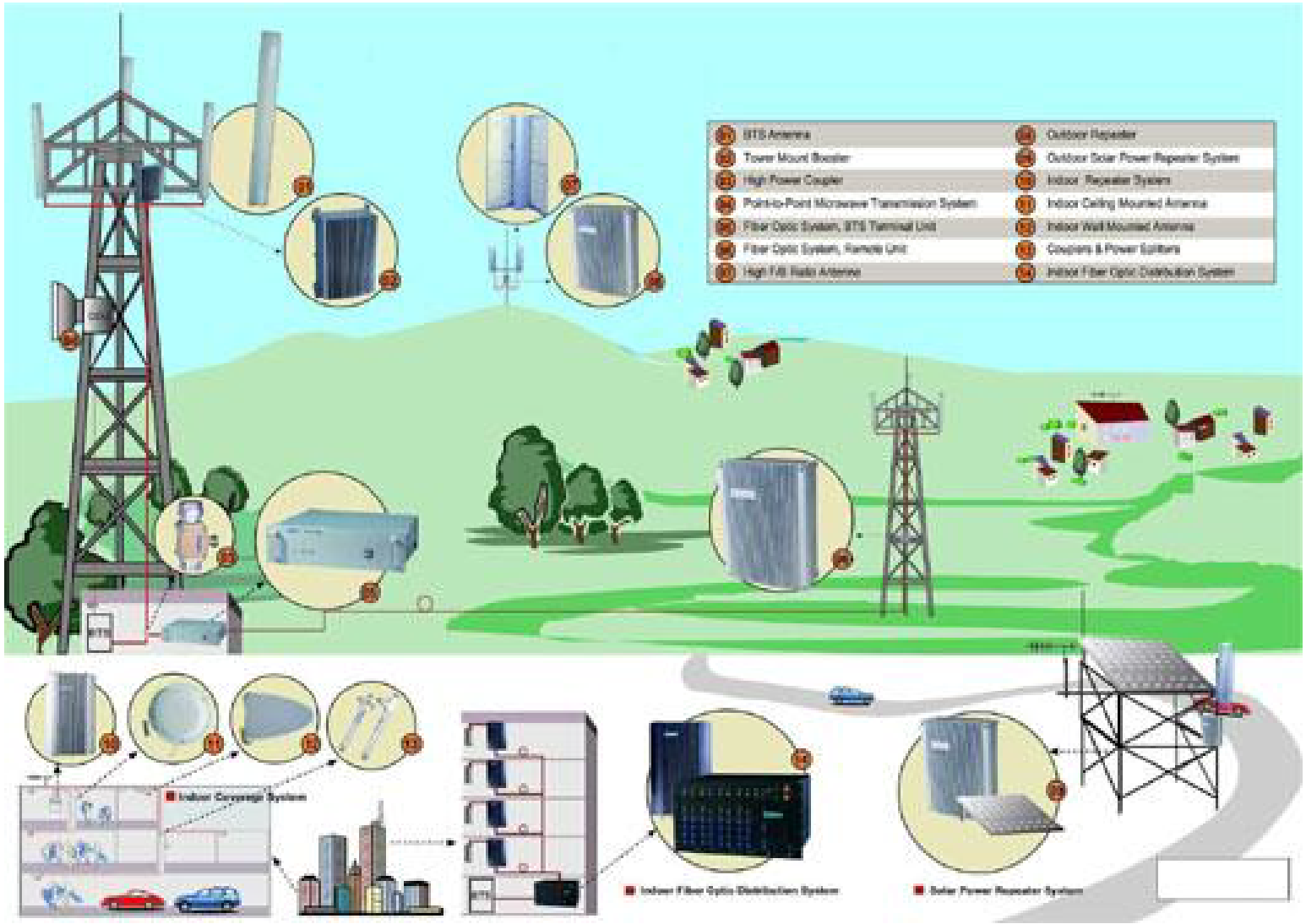
BTS Antenna
Tower Mount Booster
High Power Coupler
Point-to-Point Microwave Transmission System
Fiber Optic System, BTS Terminal Unit
Fiber Optic System, Remote Unit
High F/B Radio Antenna
Outdoor Repeater
Outdoor Solar Power Repeater System
Indoor Repeater System
Indoor Ceiling Mounted Antenna
Indoor Wall Mounted Antenna
Couplers & Power Splitters
Indoor Fiber Optic Distribution System
Indoor Coverage System
Indoor Fiber Optic Distribution System
Solar Power Repeater System

Repeater category

- **Regarding with the connection between the BS and repeater**
  - Wireless coupling repeater and fiber coupling repeater
- **Regarding with the amplifier circuit difference**
  - Channel selective repeater and frequency shifting repeater
- **Regarding with the installation environment**
  - Indoor and outdoor repeaters
- **Regarding with the network protocol**
  - GSM and CDMA repeaters
- Regarding with the bandwidth of transformation frequency,
  - Broadband repeater and frequency shifting repeater (FSR)
- Regarding with the power supply
  - Supporting with AC , DC , Battery, solar power generator, wind power generator.

- ## Fiber Optical Repeater
  - **applications where the RF signal cannot be transmitted over the air or via coaxial cable.**
  - **Optical fiber solution extends the signal by up to 20Km into a number of remote units.**
    - **cost-optimized antennas at the remote end.**
    - **Reliable design**
      - **powering solutions for both AC and DC**

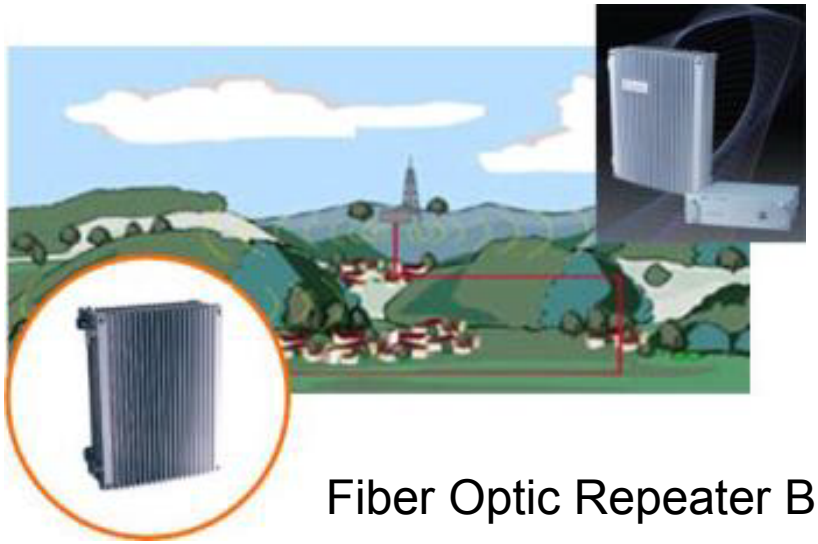

Fiber Optic Repeater Block Diagram

- ## Channel Selective Repeater
  - **flexible choice for different operating frequency.**
  - **Band selectivity ranges from 2MHz to 19MHz with centre frequency to suit the band in use.**
  - **off-air applications where high selectivity is an important feature in urban radio environments with lots of interference.**
  - **better output characteristics selectivity per carrier in a narrow band system compared to band-selective repeaters.**

- **Band Selective Repeater**
  - used in situations where large numbers of frequency carriers are to be repeated or when base station synthesized frequency hopping is used.
  - The adjustable frequency band allocations is a feature enabling less noise and interference caused by signals from operators' selective frequency band.

- **Frequency Shifting Repeater (FSR)**
  - overcome antenna isolation problems
    - limited installation environments
  - Low build out costs, centralized management with OMC
  - Flexible architecture: point to multi-point, parallel or cascaded
  - Platform for subscriber growth
  - Wireless or direct couple to base station unit

- **Indoor Repeater**
  - indoor coverage distribution systems
    - provides the quality coverage to blind spots and hotspots such as railway stations, airports, subways and elevators.
  - No addition equipments are needed for commissioning.
  - Build-in antenna and optional external antenna.
  - Automatic gain adjustment to temperature variations.
  - IF filtering for in-band signal selection and out-of-band signal suppression.
  - Broadband linear power amplifier ensures un-distorted amplification of WCDMA signals.
  - LNA improves system noise figure for better voice quality and reduced drop call.

- Indoor booster
  - compensate for feeder cable loss and to extend indoor cell coverage.
    - high downlink output power
  - improving voice quality and reducing dropped call rates
    - employ state of the art low noise amplifiers to improve uplink system noise

- **Tower Mounted Amplifier/Booster**
  - enhance up-link sensitivity
    - incorporating low noise and fail-safe technologies
    - without extensive infrastructure investment.

  - Suitable for extending outdoor coverage cost effectively
  - Easily achieved balance RF power with adjustable uplink and downlink gain
  - Robust remote monitoring and alarm function
  - Low noise amplifier minimizes system noise
  - Reduces dropped call rates
  - Enables larger coverage area

Tower Mounted Amplifier/Booster

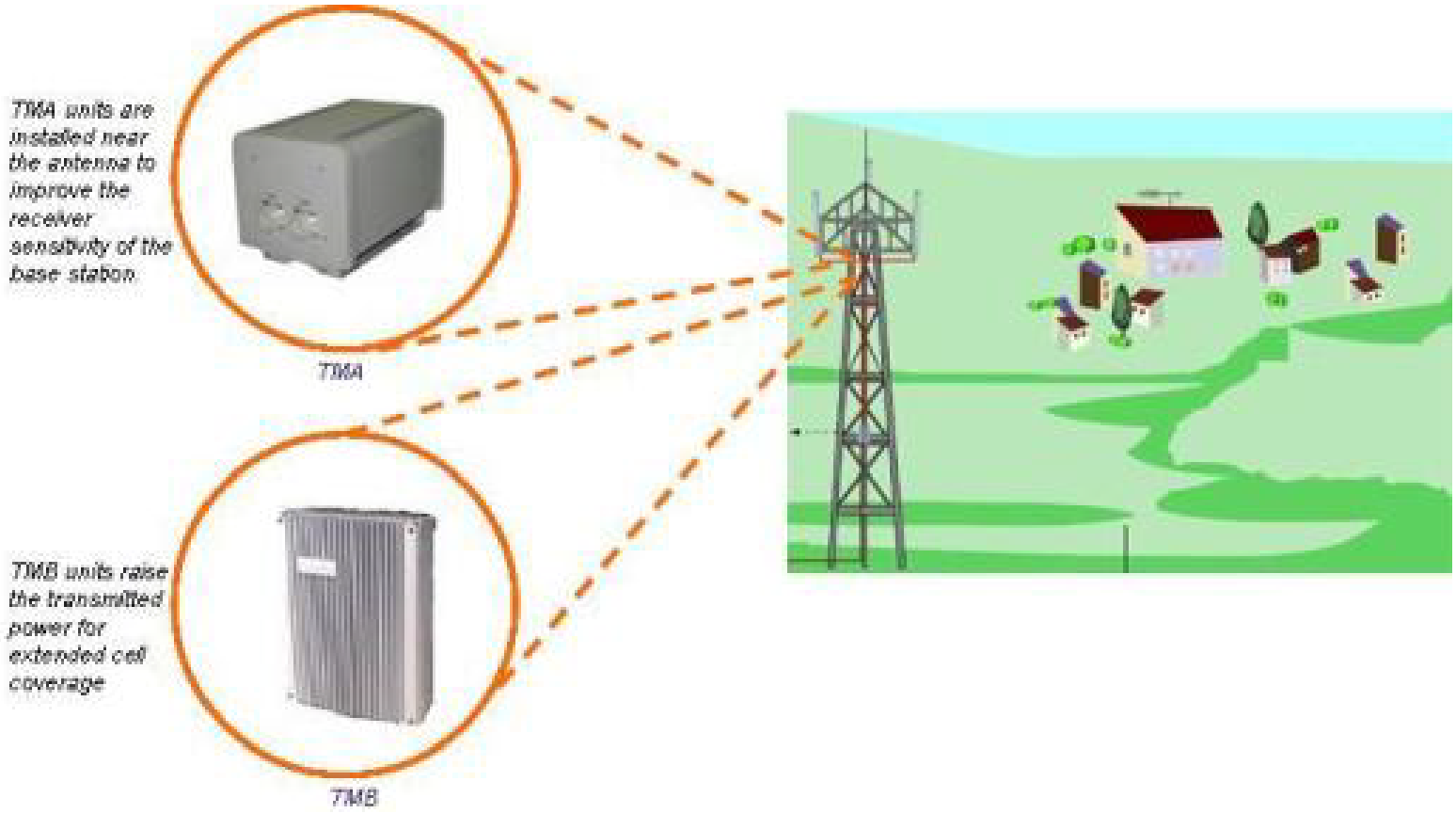

Tower Mounted Amplifier/Booster

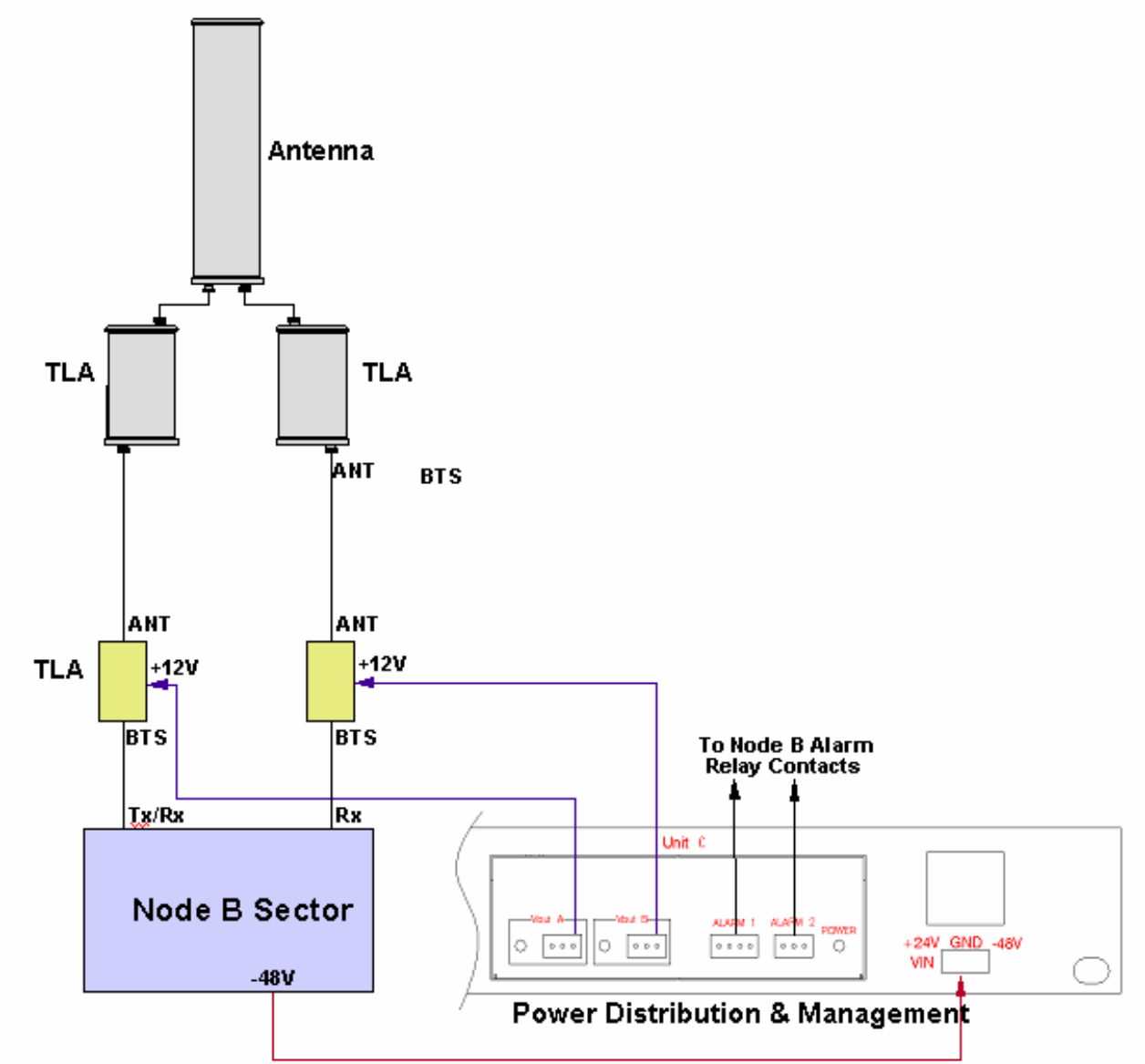

What is repeater OMC

- Repeater OMC function
  - integrated network management system for Repeaters and Boosters.
    - monitoring software to manage the repeaters & boosters via PSTN/GSM/CDMA data link or GSM/CDMA SMS communication mode.
  - the operating status and working parameters can be monitored and controlled.
    - Scheduled polling to the repeaters can be customized.
    - a server, for data acquisition and treatment, can support the clients, which is accessed by the users with different authorities.
  - The key functional modules
    - topology management module
    - device management module
    - security management module
    - alarm management module
    - repeater monitoring module
    - timed polling module
    - log management module
    - server monitoring module etc.

What is repeater OMC

- Repeater OMC object
  - displaying information in a structured way
    - operate in a server and client environment
  - presents the greatest flexibility to the operator
    - accessed by the operators with different privileges
  - reduce trouble shooting time and maintenance cost
  - prevents service interruptions
  - provides a method to equipment upgrade

Repeater OMC Decomposition Diagram

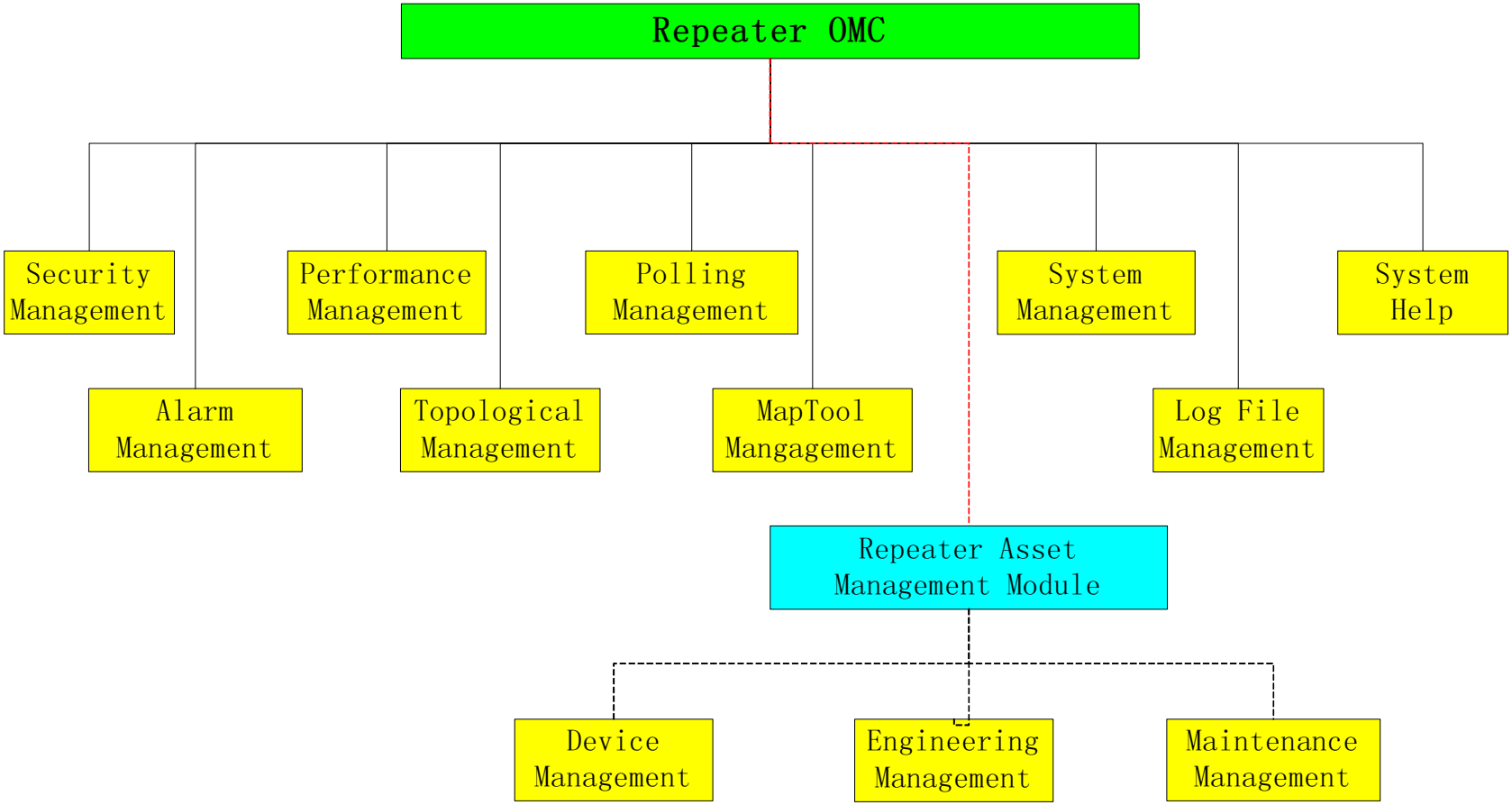

Repeater OMC Network Diagram

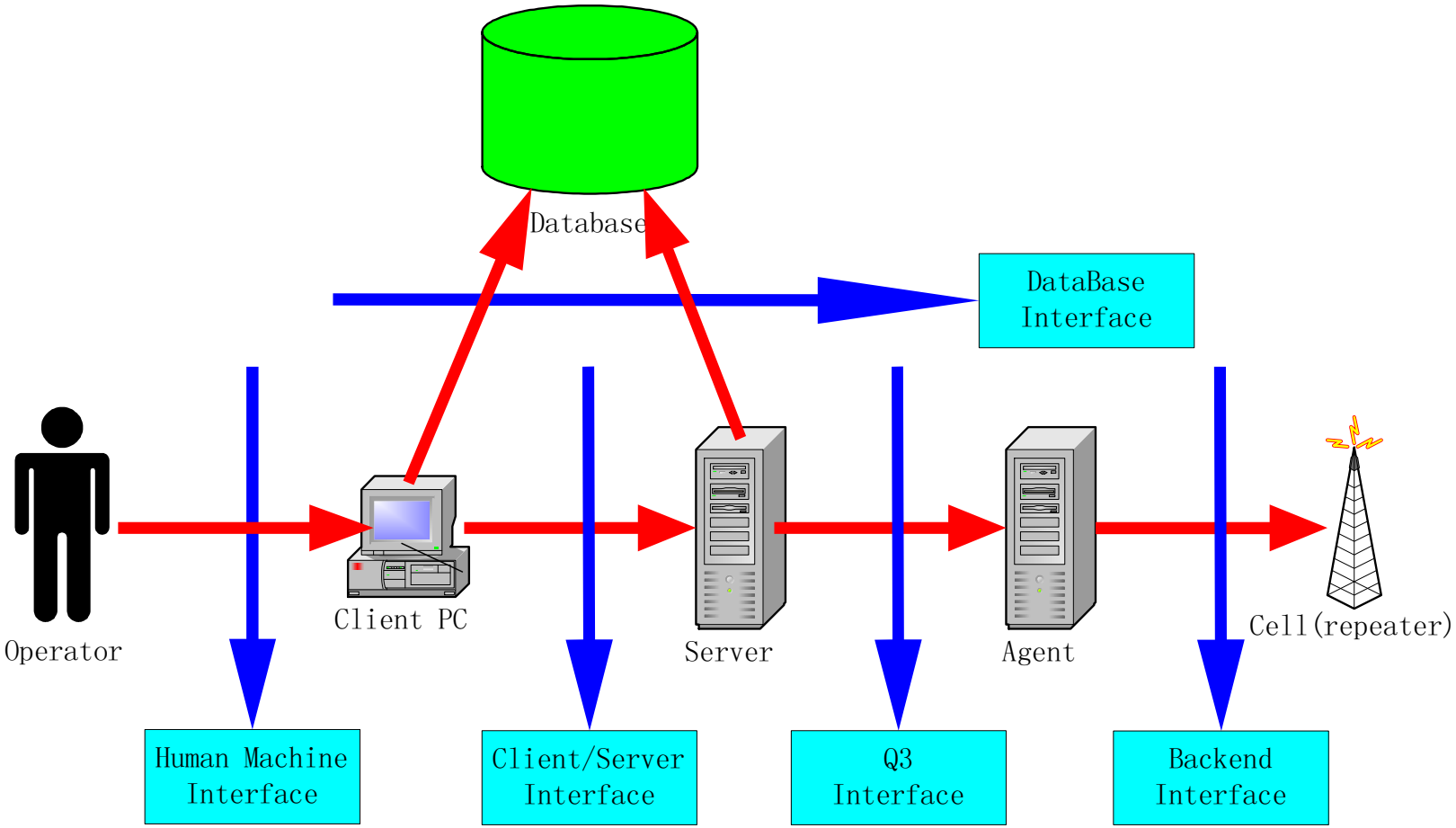

Communication Mode between OMC and Devices

- Wireless Modem (SMS and Data link)
- PSTN Modem (Data link)
- SMSC (SMS)
- GPRS

Wireless Modem Line With PC Serial Port In SMS Mode

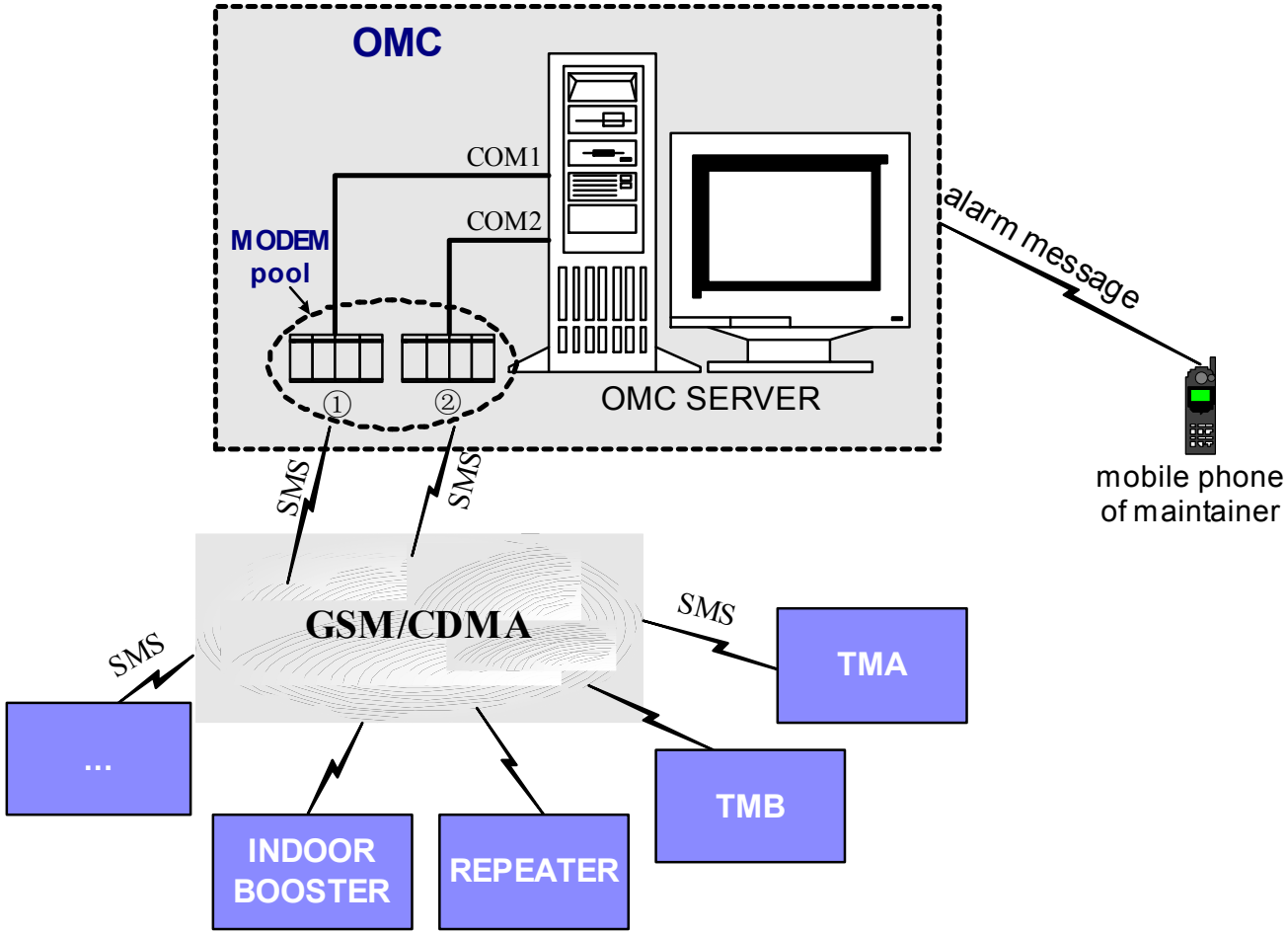

Wireless Modem Line With Multi-serial Controller In SMS Mode

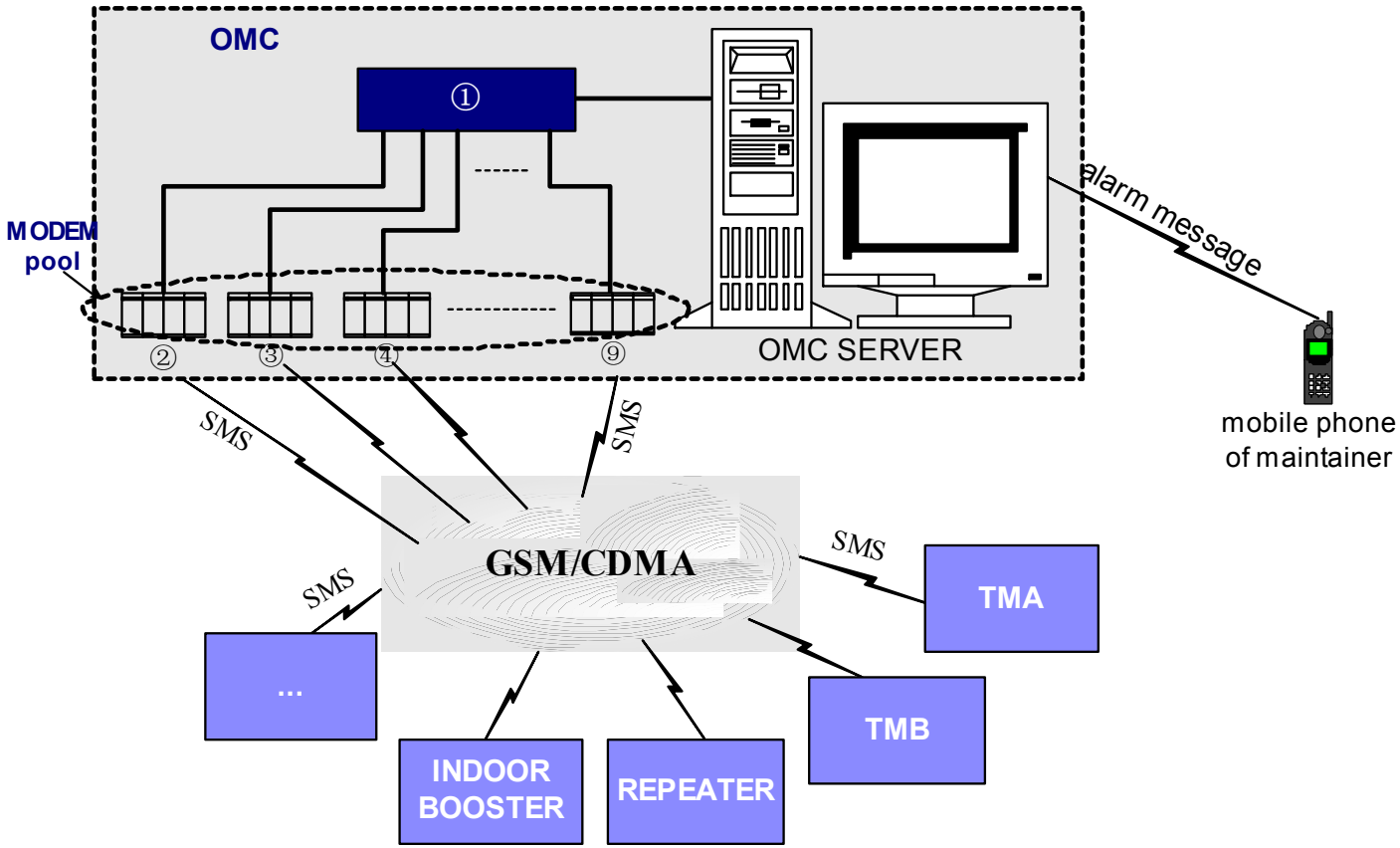

Wire Line/Wireless Modem Line With PC Serial Port In Data Link Mode

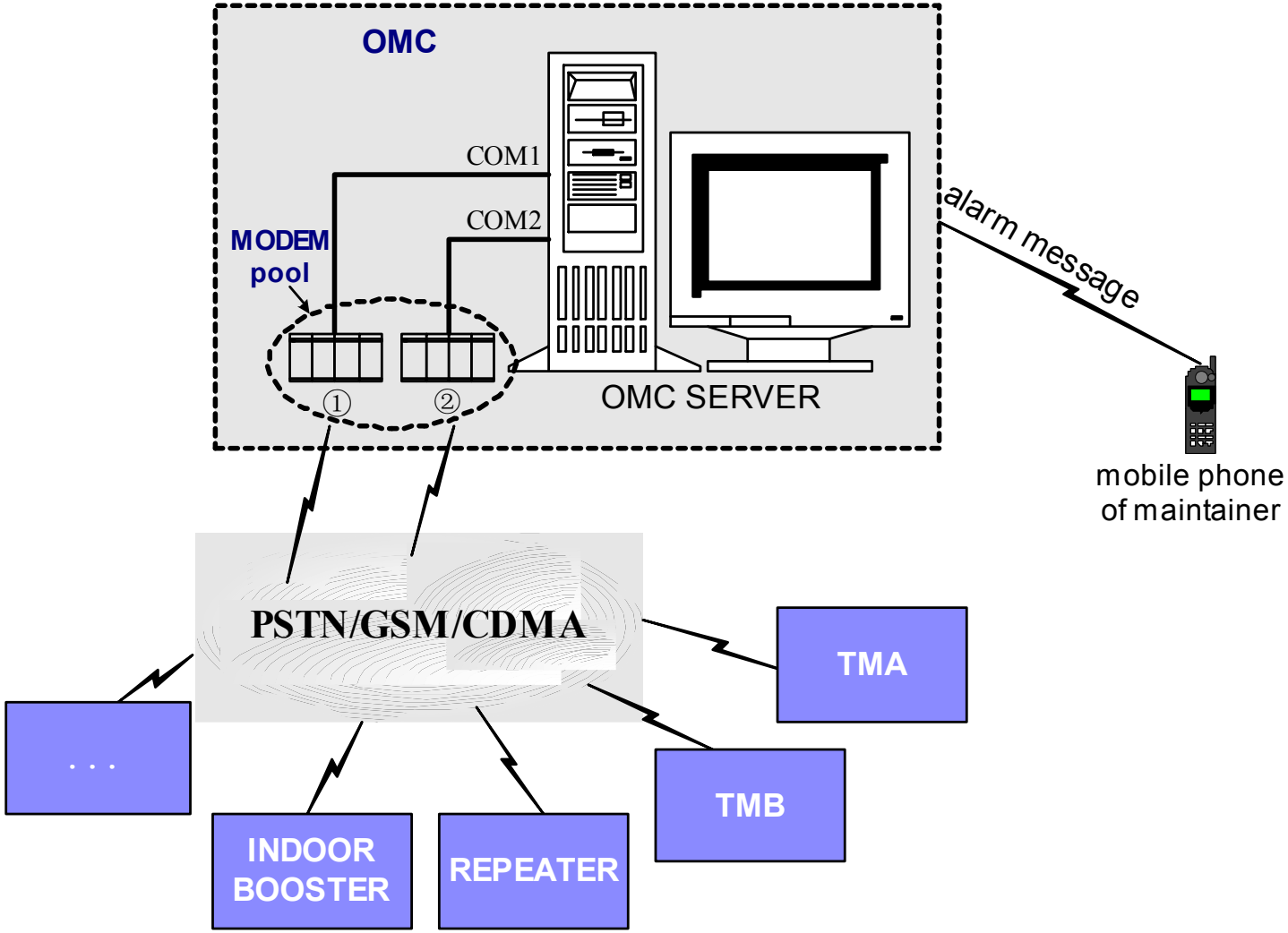

Wire Line/Wireless Modem Line With Multi-serial Controller In Data Link Mode

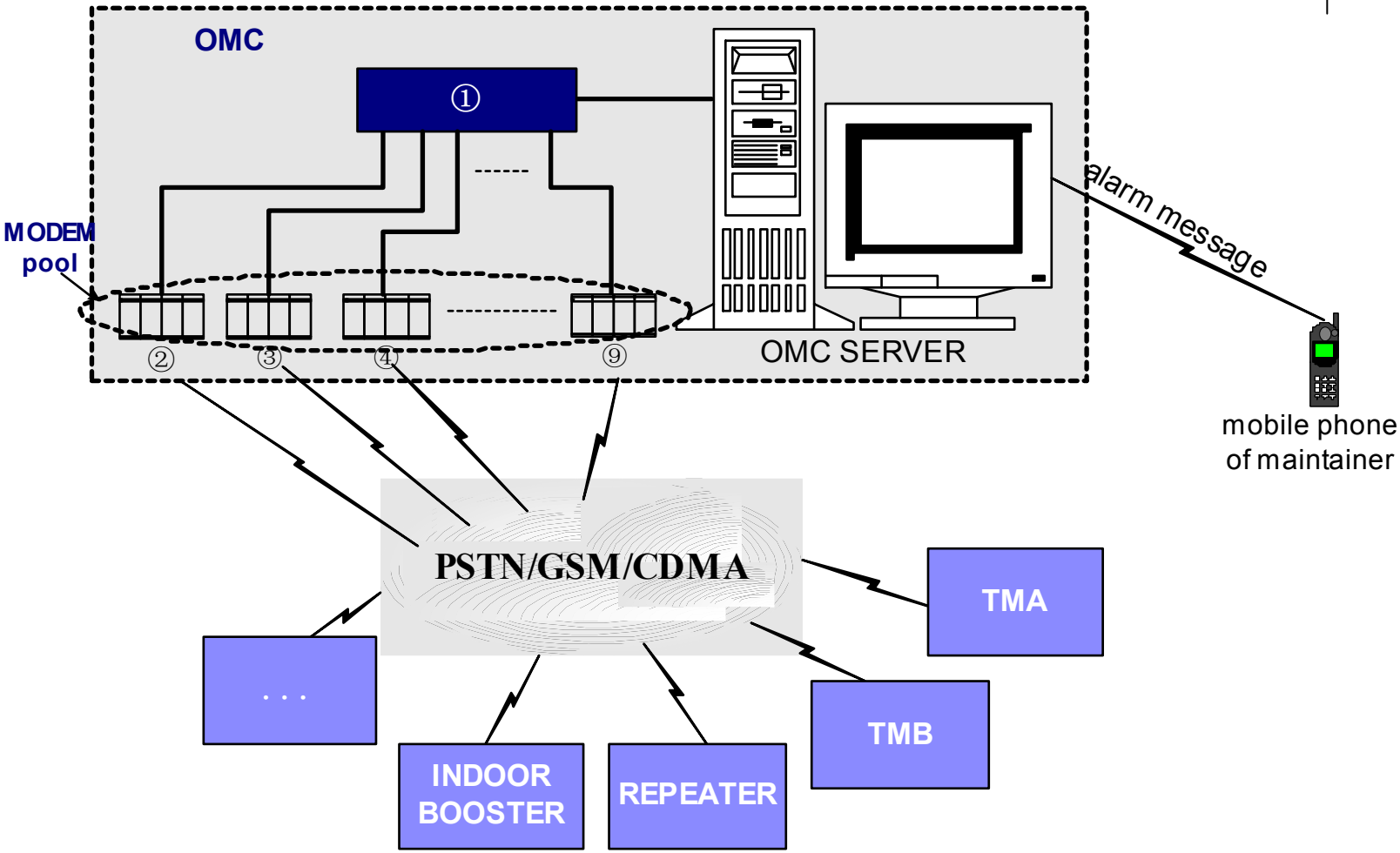

SMSC Mode (based on SMPP protocol)

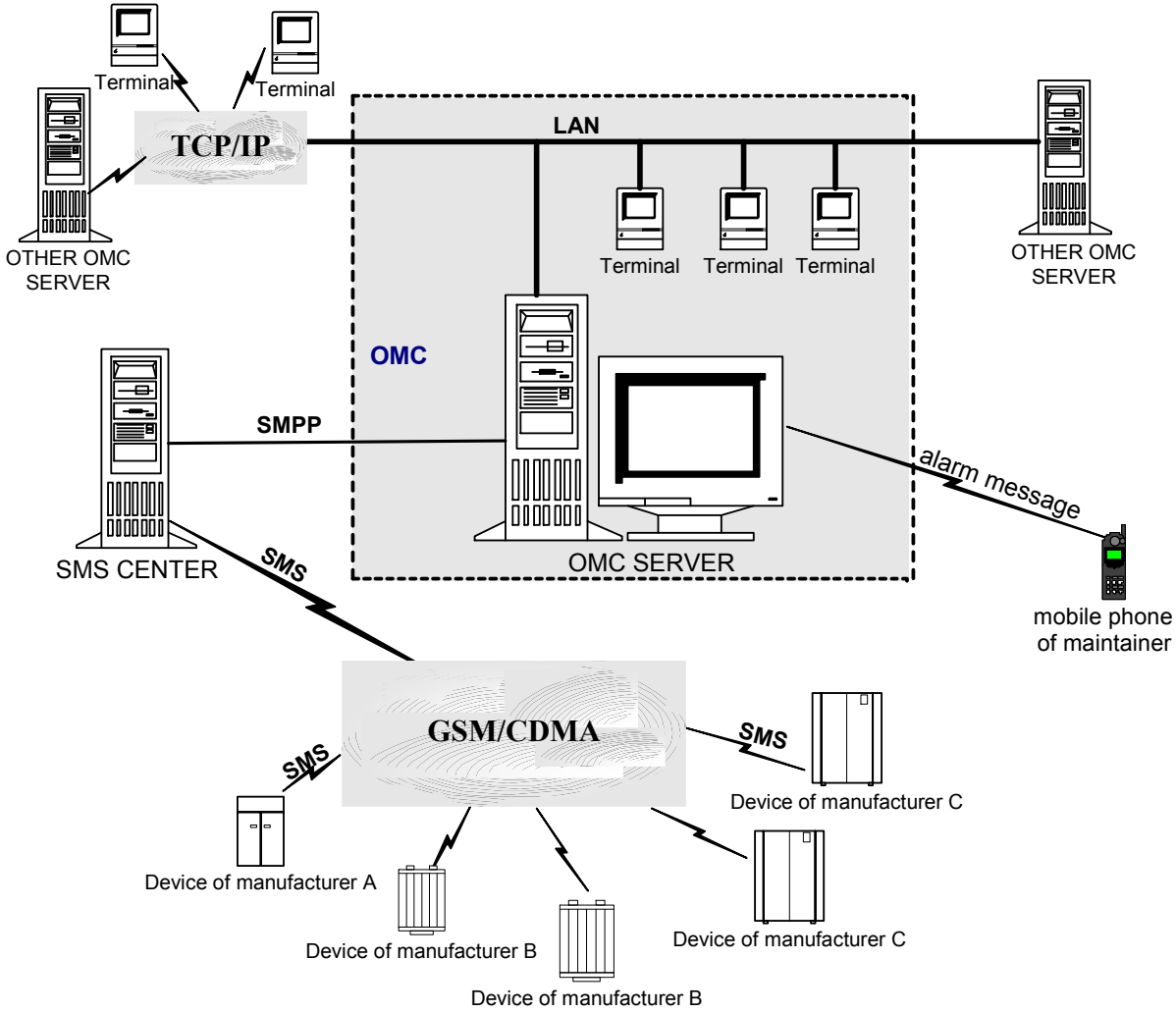

Repeater OMC vs. NMS

- **support basic Network Performance Management**
  - **The NMS and OMC (Either of them or both together) system**
    - **Network Fault Management**
    - **Configuration management**
    - **Security, accounting & Inventory Management.**
- **NBI (North Bound Interface)**
  - **OMC can connect with NMS through NBI**
    - **the capability of near real – time forwarding of all the Alarm events.**
    - **enable integration and inter working of existing and the new products in future handled by the OMC or NMS from where the NBI interface originate.**

North Bound Interface

- **The data exported by the NBI support functions**
  - **The possible OPEN standards (CORBA, SNMP, ASCHII,XML etc)**
    - **based architecture can transport and manipulate Inventory data from OMC to the NMS**
  - **send timed “keep Alive” heartbeat signal.**
  - **generate alarms and communicate with the server in case there is some malfunctioning of the NBI is detected.**
    - **The NMS applications will also do so. (Like heart beat or equivalent)**
  - **forward near real time data.**
  - **support “polling” messages to retrieve information from OMC.**
  - **support forwarding of the info in response to this message.**

3GPP protocols

- TS25.106 UTRA repeater radio transmission and reception
- TS25.113 Base station and repeater electromagnetic compatibility (EMC)
- TS25.143 UTRA repeater conformance testing
- TR25.956 Universal Terrestrial Radio Access (UTRA) repeater planning guidelines and system analysis

Thank you!