PHILIPS

sense and simplicity

MPEG Surround
Reporting on benefits of binaural operation

Dolby Inc., Fraunhofer IIS, Philips

Tdoc S4-080389

3GPP TSG-SA WG4 Meeting #49, Philadelphia, USA

30 June – 03 July 2008

PHILIPS

MPEG Surround binaural decoding

- MPEG Surround
  - Extremely efficient multi-channel audio coding
  - Backward compatible to mono or stereo services
  - One bit-stream fits all
    - 5.1/7.1 multi-channel loudspeaker reproduction
    - Closely spaced stereo loudspeaker reproduction
    - **Binaural decoding**

Informative

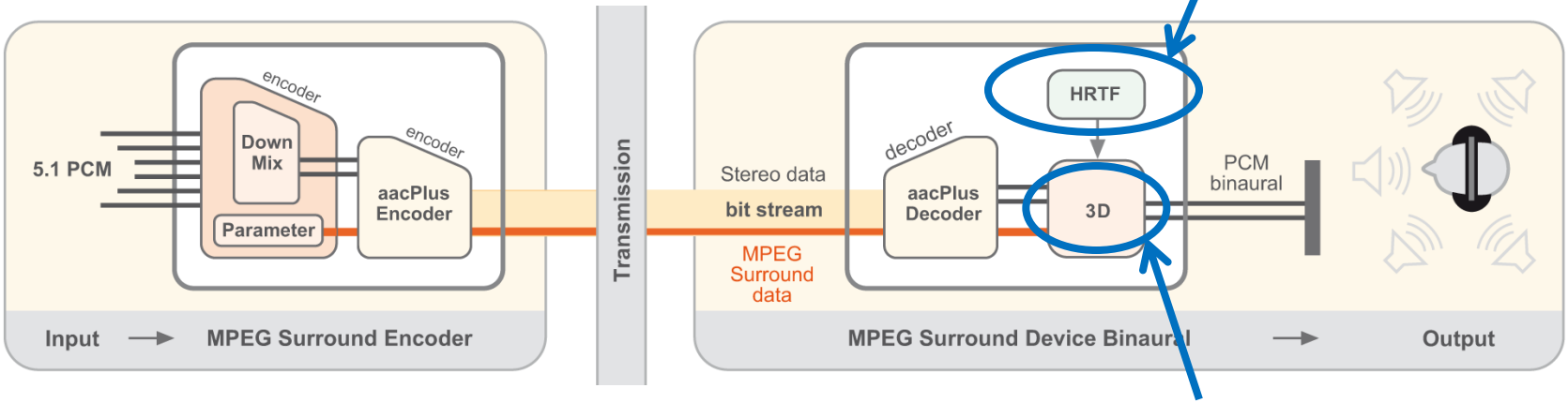

No internal upmixing to 5.1

MPEG Surround binaural decoding

- Request from previous meeting
  - Show benefits of the binaural operation, justified by listening tests

- This presentation outlines subjective tests
  - Preference tests
  - MPEG Surround Verification Test

Test 1

- Aims at showing merit of MPEG Surround binaural decoding mode over regular stereo
- Mobile context
  - Only MPEG Surround binaural in low complexity mode considered
    - Parametric HRTF processing
    - Low complexity synthetic reverberation
  - Bit rate of 64 kbps total

PHILIPS

Test 1 – Preference test

- Direct comparison of ITU downmix and MPEG Surround binaural

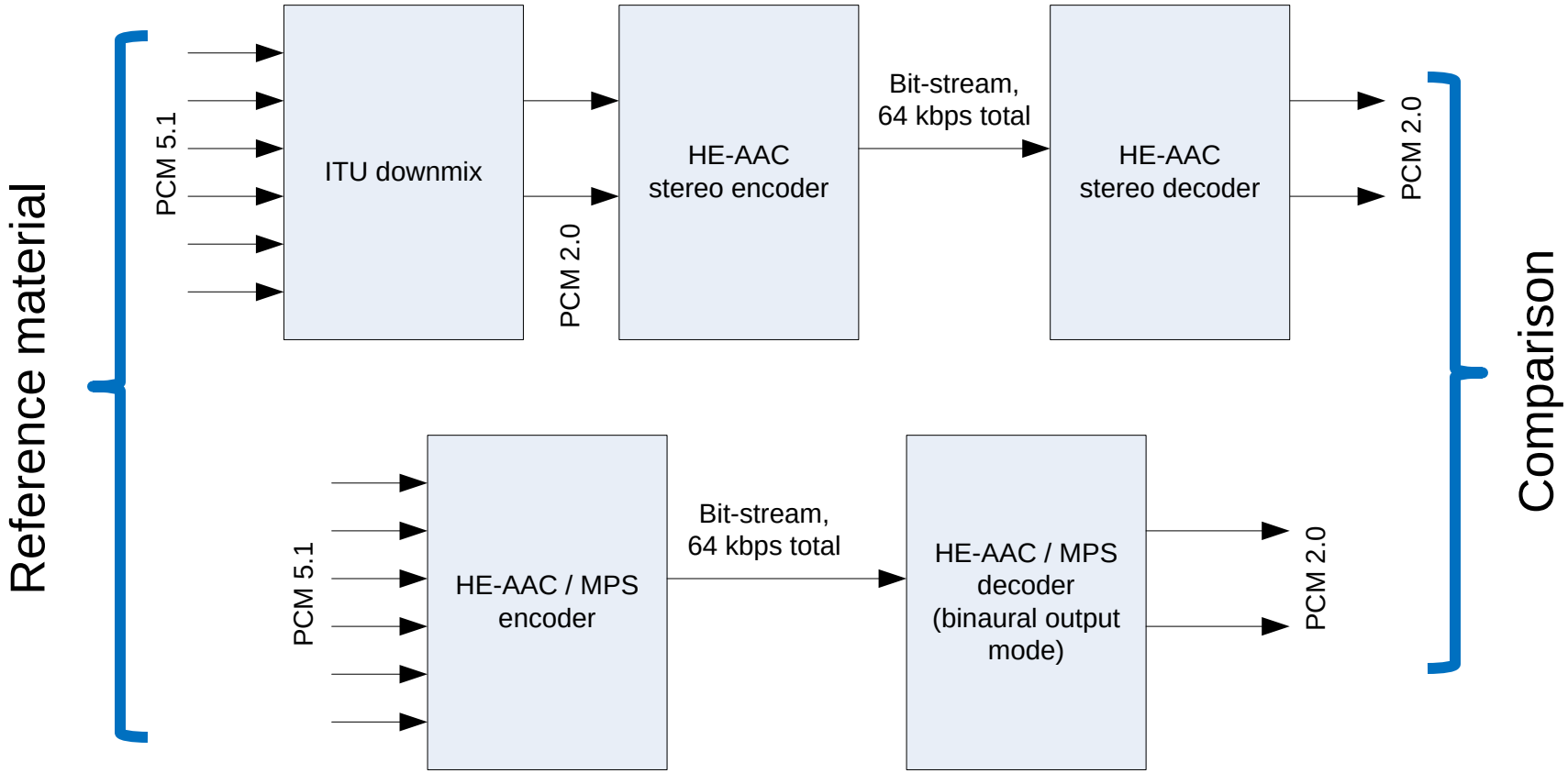

PHILIPS

Test 1 – Test material

- Typical broadcast content

Item name	Type	Duration (s)	LFE
IRT_icehockey_short_44k	Sports commentary	22.82	-
PrivateRyan_+0dB_44_cut	Movie (action scene)	34.04	✔
Rocka_short_44k	Music (a capella)	31.09	✔
VerticalLimit_Scene3_00m00s_fadeout_44k	Movie (action scene)	30.00	✔
incredibles_argue	Movie (dialogue)	25.33	-
pinkpanther_restaurant	Movie (dialogue)	34.51	-
Signsoflove	Music (pop)	21.33	✔
zauberfl_hoersp_dialog_30s	Theatre play	29.89	-

PHILIPS

Test 1 – Test procedure

- Comparative test (ITU-R BS.1284)
- STEP subjective test tool
- Listener instructed to judge overall quality

Grade	Label
+3	A is much better than B
+2	A is better than B
+1	A is slightly better than B
0	The same
-1	A is slightly worse than B
-2	A is worse than B
-3	A is much worse than B

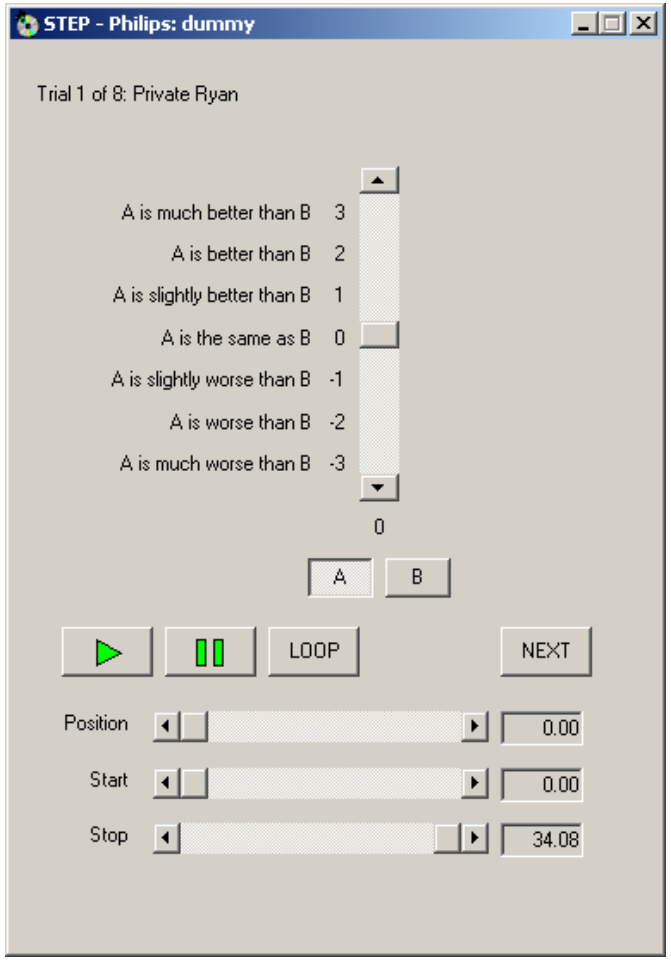

Logistics

- High quality headphones
- Controlled listening environment
- 22 expert listeners over 3 test sites

PHILIPS

Test 1 – Results

- 6 of 8 items statistically significant preference
- 2 of 8 items statistically no preference
- Mean: statistically significant preference

- Significant intersubject variation

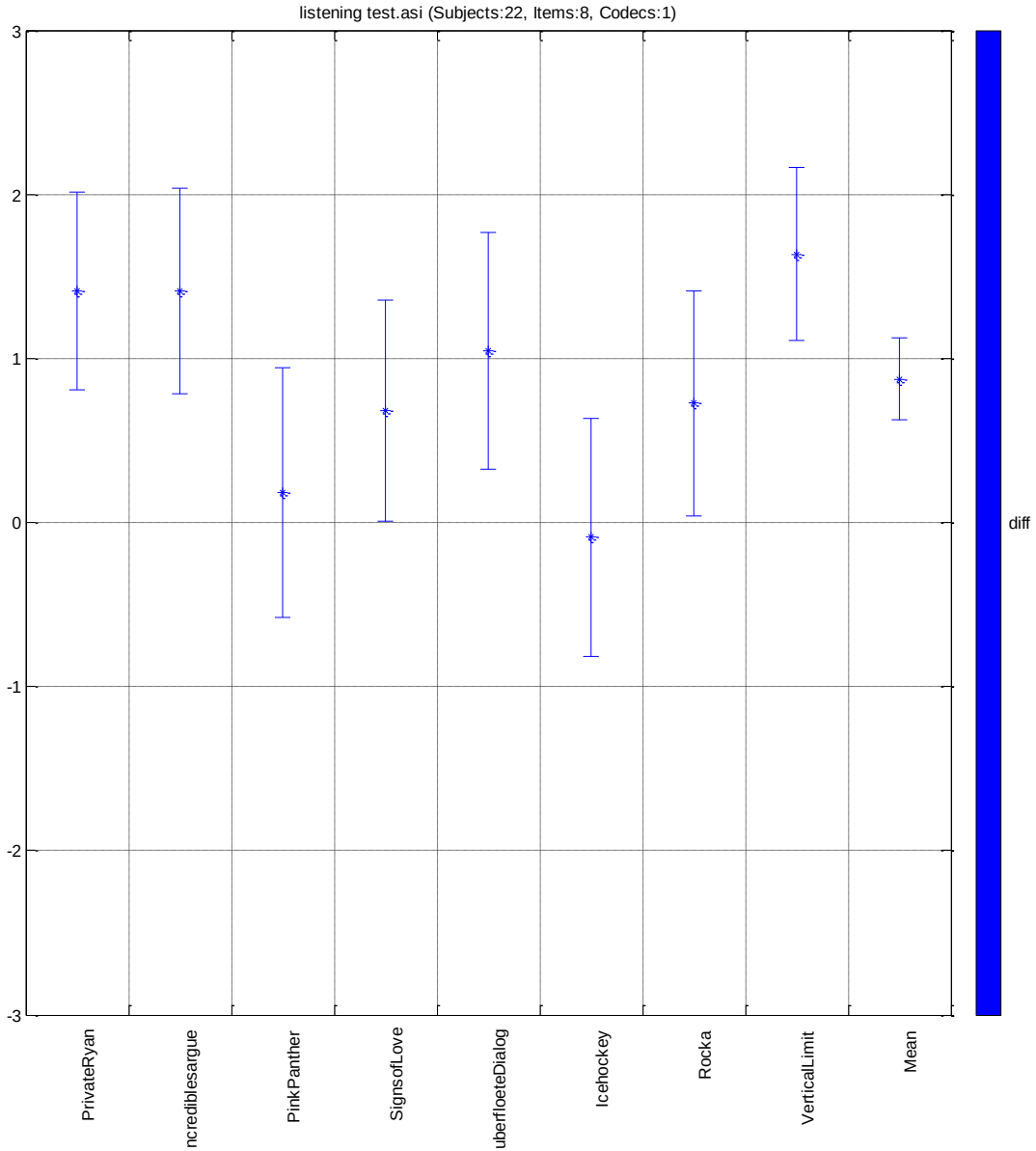

Test 1 – Discussion

- Feedback from subjects
  - Spatial image is perceived inside or close to the head.
  - Spaciousness of binaural output does not correspond to the room
  - Lack of video hinders mapping spatial image to scene setting
- Potential causes
  - The effect of non-individual binaural room transfer functions
  - Spatial image independent of head movements
  - Psychological effects
    - No strong visual cues on the sound source localization
    - Headphones provide a tactile percept of sound source
    - Audio-only setup limits ability to map auditory and visual cues

PHILIPS

Test 2 – Can alternative HRTFs further improve?

- Investigate effect of alternative HRTFs
- Experiment using adaptive measurement technique
  - Schobben & Aarts, Acta Acustica, 2005

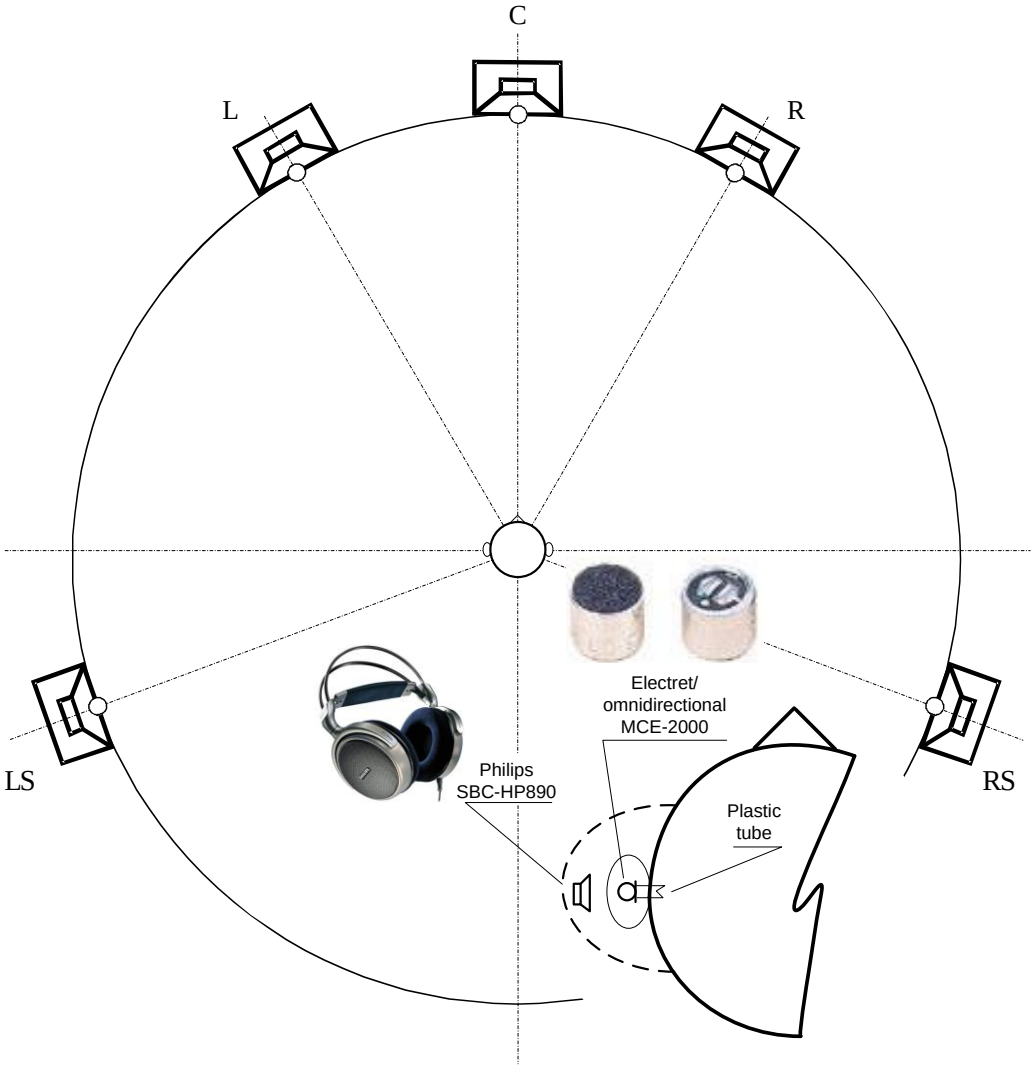

PHILIPS

Test 2 – Alternative HRTFs

- HRTFs measured for two subjects
- Subjects repeated test 1, with difference that HRTFs now correspond to own measurement

- Compared to test 1 an improvement can be noticed

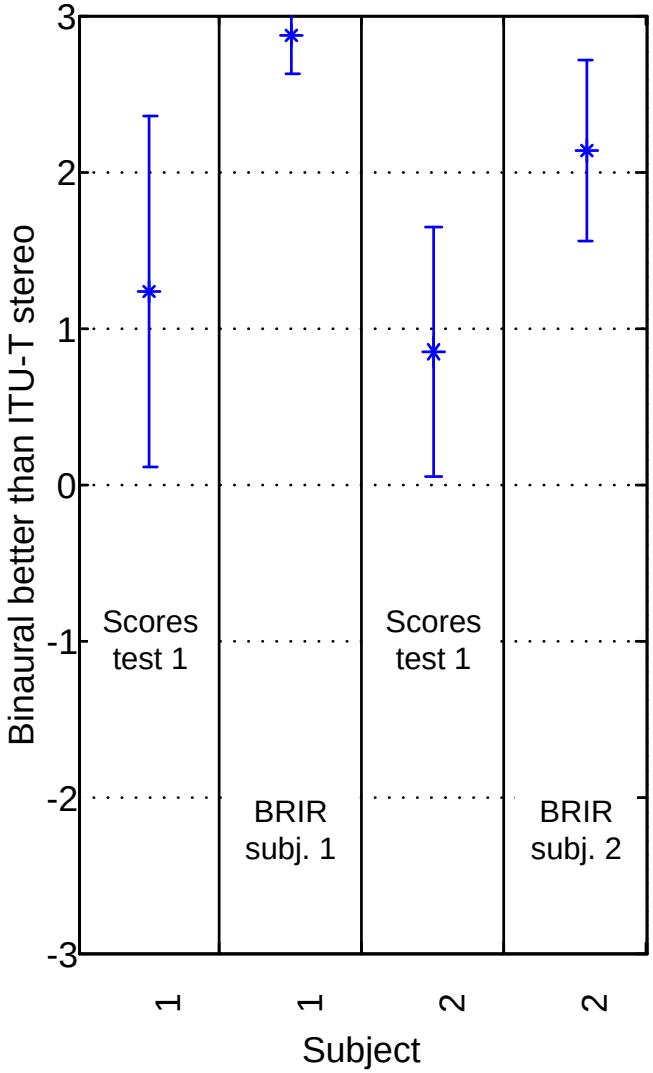

PHILIPS

MPEG Surround Verification Test (VT) report

- Tests conducted within MPEG
- Binaural operation mode

Codec ID	Core Coder	Description	Core Bitrate (kbps)
AAC_MPS _BIN	AAC	Binaural decoding (by multi-slot convolution) of AAC_MPS.	160
AAC_MPS_LP_BIN_LP	AAC	Low power decoding (LP MPEG Surround and single-slot parametric HRTF) of AAC_MPS.	160
AAC_MPS_BIN_R	AAC	HRTFs applied to AAC_MPS multi-channel output.	160
REF	-	Hidden reference: HRTFs applied to 5.1 original.	-
LP35	-	Low pass anchor (based on signal above).	-

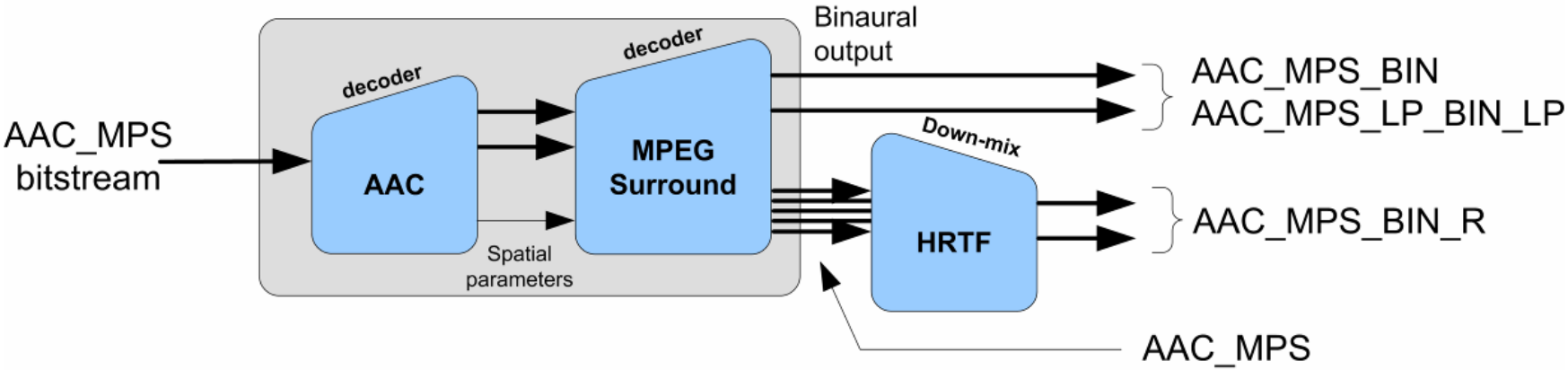

PHILIPS

MPEG Verification Test

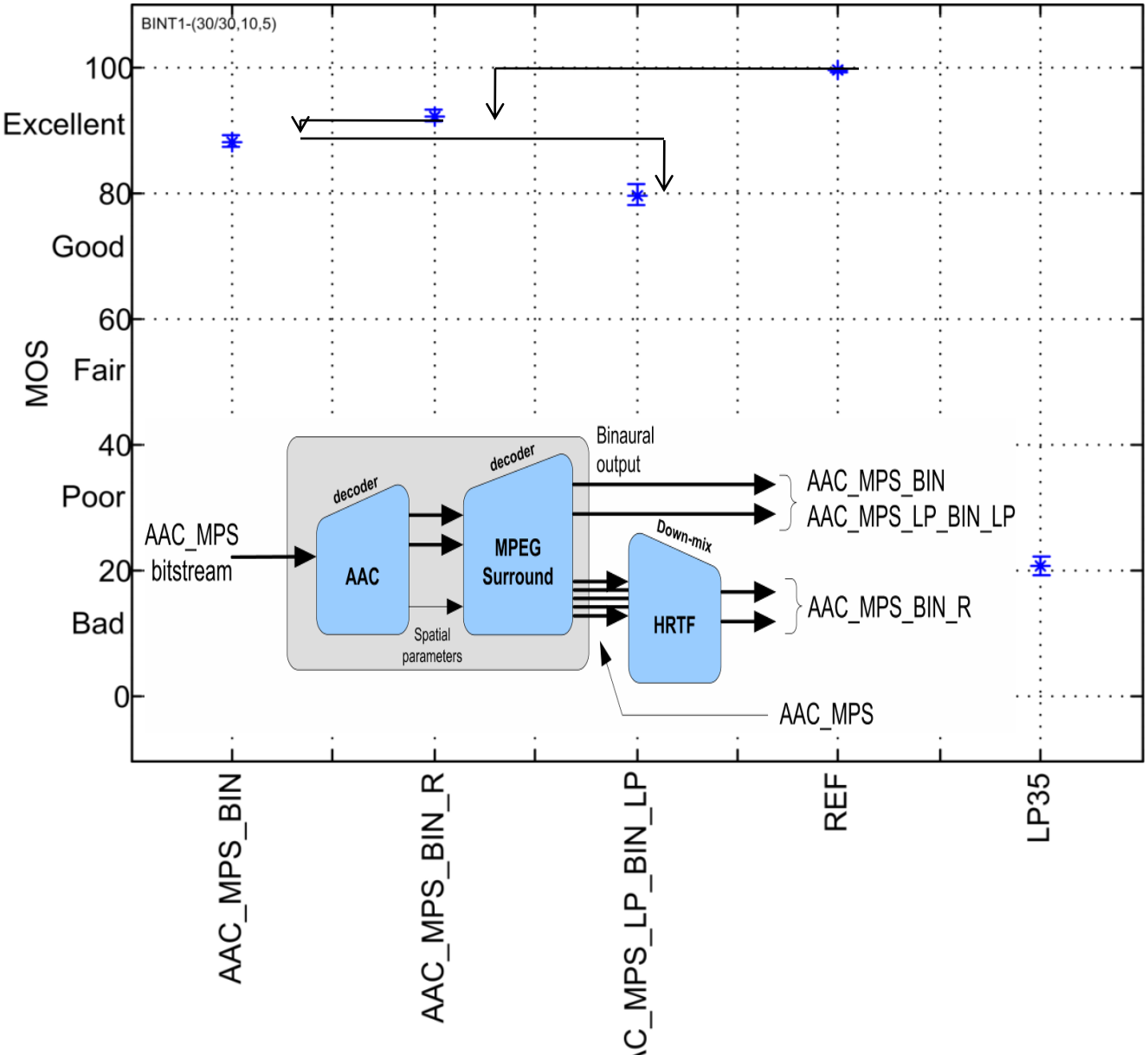

- 30 subjects
- All in range good-excellent
- Small degradations

REF

▼

AAC_MPS_BIN_R

▼

AAC_MPS_BIN

▼

AAC_MPS_LP_BIN_LP

Conclusions

- MPEG Surround binaural (low complexity)
  - Preference over ITU dmx shown using general HRTFs (Test 1)
  - Preference can further grow using alternative HRTFs (Test 2)
  - Can get close to HQ MPEG Surround decoding (MPEG VT)

  - Can also be employed for closely spaced speakers

- **Demos available**

PHILIPS