ETSI TS 103 558 V1.1.1 (2019-11)

Speech and multimedia Transmission Quality (STQ);
Methods for objective assessment of listening effort

Reference
DTS/STQ-264

Keywords
assessment, listening effort, model

ETSI

650 Route des Lucioles
F-06921 Sophia Antipolis Cedex - FRANCE

Tel.: +33 4 92 94 42 00 Fax: +33 4 93 65 47 16

Siret N° 348 623 562 00017 - NAF 742 C
Association à but non lucratif enregistrée à la
Sous-Préfecture de Grasse (06) N° 7803/88

Important notice

The present document can be downloaded from:
http://www.etsi.org/standards-search

The present document may be made available in electronic versions and/or in print. The content of any electronic and/or print versions of the present document shall not be modified without the prior written authorization of ETSI. In case of any existing or perceived difference in contents between such versions and/or in print, the prevailing version of an ETSI deliverable is the one made publicly available in PDF format at www.etsi.org/deliver.

Users of the present document should be aware that the document may be subject to revision or change of status. Information on the current status of this and other ETSI documents is available at
https://portal.etsi.org/TB/ETSIDeliverableStatus.aspx

If you find errors in the present document, please send your comment to one of the following services:
https://portal.etsi.org/People/CommiteeSupportStaff.aspx

Copyright Notification

No part may be reproduced or utilized in any form or by any means, electronic or mechanical, including photocopying and microfilm except as authorized by written permission of ETSI.
The content of the PDF version shall not be modified without the written authorization of ETSI.
The copyright and the foregoing restriction extend to reproduction in all media.

© ETSI 2019.
All rights reserved.

DECT™, **PLUGTESTS™**, **UMTS™** and the ETSI logo are trademarks of ETSI registered for the benefit of its Members.
3GPP™ and **LTE™** are trademarks of ETSI registered for the benefit of its Members and of the 3GPP Organizational Partners.
oneM2M™ logo is a trademark of ETSI registered for the benefit of its Members and of the oneM2M Partners.
GSM® and the GSM logo are trademarks registered and owned by the GSM Association.

Contents

Intellectual Property Rights 5
Foreword 5
Modal verbs terminology 5
1 Scope 6
2 References 6
2.1 Normative references 6
2.2 Informative references 7
3 Definition of terms, symbols and abbreviations 8
3.1 Terms 8
3.2 Symbols 9
3.3 Abbreviations 9
4 Introduction 9
5 Auditory test design 10
5.1 Overview 10
5.2 Speech material 10
5.3 Background noise simulation 10
5.4 Recording procedure 11
5.4.1 Acoustic recordings (receiving) 11
5.4.2 Electrical recordings (sending) 11
5.5 Sample presentation 12
5.5.1 General considerations 12
5.5.2 Monaural signals 12
5.6 Anchor/Reference Conditions 12
5.7 Attributes and test methodology 12
5.8 Requirements for the listening laboratory 13
5.9 Listening test structure 13
5.10 Reporting of results 13
6 Instrumental Assessment 14
6.1 Overview 14
6.2 Pre-processing 15
6.2.1 Overview 15
6.2.2 Compensation of Delay 16
6.2.3 Reference Scaling 17
6.2.4 Speech Part Detection 17
6.2.5 Determination of Processed Signal 17
6.2.6 Transfer Function 18
6.3 Spectral transformation 18
6.4 Compensated Reference 19
6.5 Separation of Speech and Noise Component 19
6.6 Binaural processing 20
6.7 Instrumental Assessment 21
6.7.1 Metrics 21
6.7.1.1 Level Metrics 21
6.7.1.2 Spectral Distance Metric 21
6.7.1.3 Correlation Metrics 22
6.7.2 Regression 23
6.8 Model modes for monaural signals 24
Annex A (informative): Translations of attributes, categories and instructions 25
A.1 Overview 25
A.2 English Translation 25
A.2.1 Attributes and categories 25

A.2.2 Listening test instructions 25
A.3 German Translation 26
A.3.1 Attributes and categories 26
A.3.2 Listening test instructions 26
Annex B (normative): Reference systems for listening tests 27
B.1 Overview 27
B.2 MNRU 27
B.3 Wiener Filter Approach 27
B.4 Reverb Artefacts 28
Annex C (normative): Auditory Databases for Training and Validation of the model 31
C.1 General 31
C.2 Database for Handset Mode 31
C.2.1 Overview 31
C.2.2 Test Corpus 31
C.2.3 Auditory Testing 32
C.3 Database for ICC 32
C.3.1 Overview 32
C.3.2 Simulation Environment 33
C.3.3 Speech and Noise Levels 34
C.3.4 Auditory Testing 34
C.4 Training and Validation 34
History 35

Intellectual Property Rights

Essential patents

IPRs essential or potentially essential to normative deliverables may have been declared to ETSI. The information pertaining to these essential IPRs, if any, is publicly available for **ETSI members and non-members**, and can be found in ETSI SR 000 314: *"Intellectual Property Rights (IPRs); Essential, or potentially Essential, IPRs notified to ETSI in respect of ETSI standards"*, which is available from the ETSI Secretariat. Latest updates are available on the ETSI Web server (https://ipr.etsi.org/).

Pursuant to the ETSI IPR Policy, no investigation, including IPR searches, has been carried out by ETSI. No guarantee can be given as to the existence of other IPRs not referenced in ETSI SR 000 314 (or the updates on the ETSI Web server) which are, or may be, or may become, essential to the present document.

Trademarks

The present document may include trademarks and/or tradenames which are asserted and/or registered by their owners. ETSI claims no ownership of these except for any which are indicated as being the property of ETSI, and conveys no right to use or reproduce any trademark and/or tradename. Mention of those trademarks in the present document does not constitute an endorsement by ETSI of products, services or organizations associated with those trademarks.

Foreword

This Technical Specification (TS) has been produced by ETSI Technical Committee Speech and multimedia Transmission Quality (STQ).

The present document describes auditory and instrumental test methodologies for the prediction of perceived speech signal in the presence of background noise of modern communication terminals. Audio bandwidths from narrowband up to super-wideband and fullband are considered.

Modal verbs terminology

In the present document "**shall**", "**shall not**", "**should**", "**should not**", "**may**", "**need not**", "**will**", "**will not**", "**can**" and "**cannot**" are to be interpreted as described in clause 3.2 of the ETSI Drafting Rules (Verbal forms for the expression of provisions).

"**must**" and "**must not**" are **NOT** allowed in ETSI deliverables except when used in direct citation.

1 Scope

The present document describes auditory and instrumental testing methodologies, which can be used to evaluate the perceived listening effort in the following speech communication scenarios at acoustical interfaces in the presence of acoustical near-end ambient noise.

Similar to other instrumental quality prediction methods like e.g. ETSI TS 103 281 [4] or Recommendation ITU-T P.863 [i.2] valid objective predictions can only be made based on a specific listening test design and on auditory results obtained in such tests.

The present document specifies the test design and reference conditions used to evaluate listening effort subjectively.

The objective prediction model specified are based on this test design and validated against the results of the underlying subjective tests; only normal hearing listeners are considered. The usage for hearing impaired listeners is for further study.

Several application scenarios and types of terminals are covered:

- (Mobile) Handset.
- In-car communication systems.

The following applications are for further study:

- Headset (including active noise cancelling devices).
- Group audio terminals.
- Mobile handheld hands-free.
- Vehicle hands-free.
- Fixed, mobile and IP-based networks (including impairments).

Binaural as well as monaural recording situations are covered. The listening effort prediction model utilizes binaural signals for acoustical recordings and monaural signals for electrical recordings.

2 References

2.1 Normative references

References are either specific (identified by date of publication and/or edition number or version number) or non-specific. For specific references, only the cited version applies. For non-specific references, the latest version of the referenced document (including any amendments) applies.

Referenced documents that are not found to be publicly available in the expected location might be found at https://docbox.etsi.org/Reference.

NOTE: While any hyperlinks included in this clause were valid at the time of publication, ETSI cannot guarantee their long-term validity.

The following referenced documents are necessary for the application of the present document.

[1] Recommendation ITU-T P.800: "Methods for subjective determination of transmission quality".

[2] Recommendation ITU-T P.835: "Subjective test methodology for evaluating speech communication systems that include noise suppression algorithm".

[3] Recommendation ITU-T P.56: "Objective measurement of active speech level".

[4] ETSI TS 103 281: "Speech and multimedia Transmission Quality (STQ); Speech quality in the presence of background noise: Objective test methods for super-wideband and fullband terminals".

[5] Recommendation ITU-T P.501: "Test signals for use in telephonometry".

[6] Recommendation ITU-T P.57: "Artificial ears".

[7] Recommendation ITU-T P.58: "Head and torso simulator for telephonometry".

[8] ITU-T Handbook: "Practical procedures for subjective testing", 2011.

[9] ITU-T Handbook: "Handbook on Telephonometry", 1992.

[10] Directive 2003/10/EC of the European Parliament and of the Council of 6 February 2003 on the minimum health and safety requirements regarding the exposure of workers to the risks arising from physical agents (noise), Official Journal; OJ L42, 15.02.2003, p.38..

[11] Recommendation ITU-T G.160: "Voice enhancement devices".

[12] Roland Sottek: "A Hearing Model Approach to Time-Varying Loudness". Acta Acustica united with Acustica, vol. 102(4), pp. 725-744, 2016.

[13] Til Aach and Volker Metzler: "Defect Interpolation in Digital Radiography - How Object-Oriented Transform Coding Helps". SPIE Vol. 4322: Medical Imaging 2001.

[14] Rui Wan, Nathaniel I. Durlach and H. Steven Colburn: "Application of a short-time version of the Equalization-Cancellation model to speech intelligibility experiments with speech maskers". The Journal of the Acoustical Society of America, Vol. 136/2, pages 768-776, 2014.

[15] Nathaniel I. Durlach: "Equalization and Cancellation Theory of Binaural Masking-Level Differences", The Journal of the Acoustical Society of America 35(8), pages 1206-1218, 1963.

NOTE: Available at http://daviddurlach.com/nat-mem/wp-content/uploads/2016/10/Durlach_JASA_1963_ECModel.pdf.

[16] J. H. Friedman: "Multivariate Adaptive Regression Splines", The Annals of Statistics, Vol 19, No. 1, pp. 1-141, 1991.

NOTE: Available at https://projecteuclid.org/download/pdf_1/euclid.aos/1176347963.

[17] ISO 389-7:2005: "Acoustics - Reference zero for the calibration of audiometric equipment - Part 7: Reference threshold of hearing under free-field and diffuse-field listening conditions".

[18] ANSI S3.5-1997: "Methods for Calculation of the Speech Intelligibility Index".

[19] IEC 61260-1:2014: "Electroacoustics - Octave-band and fractional-octave-band filters - Part 1: Specifications".

[20] IEC 61672-1:2013: "Electroacoustics - Sound level meters - Part 1: Specifications".

[21] Recommendation ITU-T P.810: "Modulated noise reference unit (MNRU)".

[22] Recommendation ITU-T P.50: "Artificial voices".

[23] Recommendation ITU-T P.Imp830: "Implementer's Guide for P.830 (Subjective performance assessment of telephone-band and wideband digital codecs)".

2.2 Informative references

References are either specific (identified by date of publication and/or edition number or version number) or non-specific. For specific references, only the cited version applies. For non-specific references, the latest version of the referenced document (including any amendments) applies.

NOTE: While any hyperlinks included in this clause were valid at the time of publication, ETSI cannot guarantee their long-term validity.

The following referenced documents are not necessary for the application of the present document but they assist the user with regard to a particular subject area.

[i.1] Recommendation ITU-T P.10/G.100: "Vocabulary for performance and quality of service".

[i.2] Recommendation ITU-T P.863: "Perceptual objective listening quality assessment".

[i.3] Recommendation ITU-T P.1401: "Methods, metrics and procedures for statistical evaluation, qualifying and comparison of objective quality prediction models".

[i.4] ETSI TS 103 224: "Speech and multimedia Transmission Quality (STQ); A sound field reproduction method for terminal testing including a background noise database".

[i.5] ETSI ES 202 396-1: "Speech and multimedia Transmission Quality (STQ); Speech quality performance in the presence of background noise; Part 1: Background noise simulation technique and background noise database".

[i.6] ETSI TS 103 106: "Speech and multimedia Transmission Quality (STQ); Speech quality performance in the presence of background noise: Background noise transmission for mobile terminals-objective test methods".

[i.7] Bendat, J. S.; Piersol, A. G.: "Engineering applications of correlation and spectral analysis". New York, Wiley-Interscience, 1980.

[i.8] Alexandre Chabot-Leclerc: "PAMBOX: A Python auditory modeling toolbox". EuroScipy proceedings, Cambridge, 27-30 August 2014.

[i.9] Cees H. Taal, Richard C. Hendriks, Richard Heusdens, and Jesper Jensen: "An Algorithm for Intelligibility Prediction of Time-Frequency Weighted Noisy Speech". IEEE Transactions on Audio, Speech and Language Processing, Vol 19 No. 7, 2011.

[i.10] ETSI EG 202 396-3: "Speech and multimedia Transmission Quality (STQ); Speech Quality performance in the presence of background noise; Part 3: Background noise transmission - Objective test methods".

[i.11] Gheorghe Micula, Sanda Micula: "Handbook of Splines", Springer, 1999.

[i.12] J. Reimes, G. Mauer und H. W. Gierlich: "Auditory Evaluation of Receive-Side Speech Enhancement Algorithms". Proceedings of DAGA 2016, Aachen.

[i.13] Jan Reimes and Christian Lüke: "Perceived Listening Effort for In-car Communication systems". Proceedings of 13th ITG Conference on Speech Communication, Oldenburg.

[i.14] Rabea Landgraf, Johannes Köhler-Kaeß, Christian Lüke, Oliver Niebuhr, and Gerhard Schmidt: "Can you hear me now? Reducing the Lombard effect in a driving car using an in-car communication system", in Proceedings Speech Prosody, (Boston, MA, USA), June 2016.

[i.15] ETSI EG 202 518: "Speech and multimedia Transmission Quality (STQ); Acoustic Output of Terminal Equipment; Maximum Levels and Test Methodology for Various Applications".

3 Definition of terms, symbols and abbreviations

3.1 Terms

Void.

3.2 Symbols

For the purposes of the present document, the following symbols apply:

ACT	Frames in the signal(s) containing active speech
dB_{Pa}	Sound Pressure Level in dB, referenced to 1 Pa
dB_{SPL}	Sound Pressure Level in dB, referenced to 20 µPa
F_N	Noise flag, indicating if the prediction algorithm uses a noise-only reference or not
G_{FB}	Gain in dB, which is used to scale the feedback signal
G_{out}	Gain in dB, which is used to increase the output volume of an ICC system
M_A	Number of frames, which contain active speech
T_{FB}	Time between playback of a sound over an ICC system and the corresponding feedback into the system
T_{ICC}	Processing time of an ICC system

3.3 Abbreviations

For the purposes of the present document, the following abbreviations apply:

AMR	Adaptive Multi-Rate codec (narrowband)
AMR-WB	Adaptive Multi-Rate codec (wideband)
ASL	Active Speech Level
BWE	Bandwidth Extension
DRP	Drum Reference Point
DUT	Device Under Test
FB	FullBand
HATS	Head And Torso Simulator
ICC	In-Car Communication
IIR	Infinite Impulse Response
IR	Impulse Response
LE	Listening Effort
MARS	Multivariate Adaptive Regression Splines
MNRU	Modulated Noise Reference Unit
MOS	Mean Opinion Score
MOS_{LE}	Listening Effort on MOS scale
MRP	Mouth Reference Point
NB	NarrowBand
NELE	Near-End Listening Enhancement
NLMS	Normalized Least-Mean Square (adaptive filter)
NS	Noise Suppression
PC	Personal Computer
PCM	Pulse-Code Modulation
POI	Point Of Interconnect
SII	Speech Intelligibility Index
SNR	Signal-to-Noise Ratio
SPNF	Signal Processing Network Function
SQ	Speech Quality
STEC	Short-time Equalization-Cancellation
SWB	Super-WideBand
WB	WideBand

4 Introduction

Communication in noisy environments may be extremely stressful for the person located at the near-end side. Since the background noise is originated from the natural environment, it can usually not be reduced for the listener. In addition, the perceived signal may be disturbed by other linear or non-linear signal processing. In consequence, speech intelligibility may decrease, i.e. listening effort may increase, respectively.

The present document describes an auditory test design for the assessment of perceived listening effort as well as an instrumental prediction model. Both provide MOS values based on binaural recording and listening to real speech signals in noisy conditions. The audio bandwidth of the model is fullband (20 Hz - 20 kHz) according to [i.1]. Speech signals may be presented in narrow-band, wideband, super-wideband or fullband.

In contrast to "classical" intelligibility tests, the auditory assessment of listening effort collects opinion scores instead of "measuring" the word error rate of multiple test subjects. In general, it seems difficult to compare results of these two methods, but since both metrics obviously depend on similar conditions (SNR, temporal and spectral structure of the background noise, speech degradations), a certain correlation can be expected. Annex B includes a summary of studies investigating this relationship.

5 Auditory test design

5.1 Overview

The basis of any perceptually based measure, which models the behaviour of human test persons, are auditory tests. In general, these tests are carried out with naïve test persons, who are asked to rate a certain quality aspect of a presented speech sample.

For the assessment of listening effort, a test design related to Recommendations ITU-T P.800 [1] and P.835 [2] with multiple attributes is chosen. The additional assessment of any speech quality attribute is in general optional, but is strongly recommended. It may help the test subjects to better differentiate between the ambient noise and speech-related degradations. Any speech quality results obtained with this procedure are outside the scope of the present document.

5.2 Speech material

The source speech database (far end signal) to be used for data collection and listening tests needs to consist of at least eight samples (2 male and 2 female talkers, 2 samples per talker). Appropriate test signals for multiple languages and in fullband bandwidth can be found in Recommendation ITU-T P.501 [5] or in annex E of ETSI TS 103 281 [4].

Each sentence shall be centred in a time window of 4 seconds. The minimum duration of an active speech material shall be 1 second, i.e. resulting in not more than 1,5 seconds of leading and trailing silence. The duration of the active speech material shall not exceed 3 seconds, which correspond to a minimum leading/trailing silence period of 0,5 seconds. The samples shall be concatenated to a single speech sequence for the measurement of the degraded signals.

For proper conditioning of systems including signal processing, a conditioning sequence consisting of an initial silence period followed by at least four different sentences from four different talkers is used.

The concatenated speech sequence shall always be available as in fullband. This signal is denoted as the reference signal $r(k)$ in the following clauses. Depending on the application, a pre-filtering (e.g. to narrow-band or wideband) may be necessary for the electrical insertion of the test sequence in the device under test (DUT) in receiving direction.

5.3 Background noise simulation

The presence of ambient noise is the most influencing aspect on listening effort. In order to provide an accurate sound field reproduction at the DUT and/or at the listener position, the method according to ETSI TS 103 224 [i.4] shall be used for the recording of samples. The present document includes two recording/playback procedures: head-oriented and generic sound field reproduction. Depending on the application, the most suitable recording/playback procedures shall be selected.

The number of different background noises may vary from one application to the other. For in-car communication scenarios for example, only car noise(s) is reasonable. For testing of mobile phones in handset or handheld hands-free mode, as many different noise types as possible should be selected. The consideration of silent condition (no background noise playback) is strongly recommended.

5.4 Recording procedure

5.4.1 Acoustic recordings (receiving)

The test setup is motivated by the requirement that all signals can be measured outside the device. For capturing the signals, a HATS according to Recommendation ITU-T P.58 [7] is used. The specific setup may vary from one application to another. However, the recording procedure shall always follow the guidelines described in the following.

The recording procedure is conducted in two steps:

1) The reference signal $r(k)$ is inserted to the DUT in receiving direction. The processed speech signal and the noise playback are recorded simultaneously. These signals are recorded binaurally. This binaural signal is denoted as $d(k)$ in the following.

2) In the second step, the transmission of the speech signal is deactivated; only the near-end noise is recorded as a binaural signal, which is denoted as $n(k)$. The DUT shall be active/mounted/be in the same operational mode as for the first step. No disturbing signal shall be produced by the DUT.

This measurement principle allows the extraction of a processed, but noise-free speech signal $p(k)$ from the degraded signal $d(k)$ within the prediction model.

Figure 5.1 illustrates an example measurement setup for handset testing. For this purpose, the mobile DUT is mounted at right ear of head and torso simulator (HATS) according to Recommendation ITU-T P.58 [7] with an application force of 8N. The artificial head is equipped with diffuse-field equalized type 3.3 ear simulators according to Recommendation ITU-T P.57 [6]. Then the HATS is placed into a measurement chamber. Inside this room, a playback system according to ETSI TS 103 224 [i.4] is arranged.

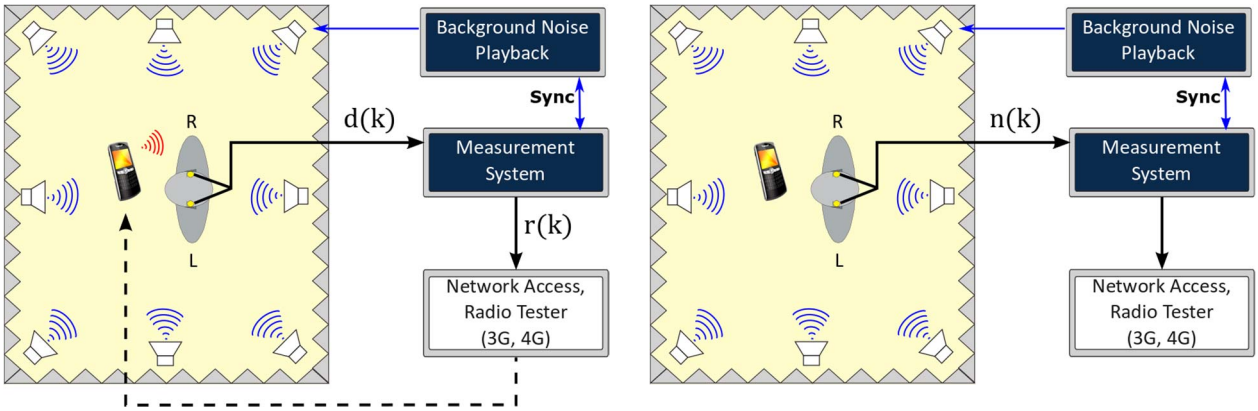

Figure 5.1: Schematic recording setup for (binaural) signal assessment

In the first measurement step, degraded speech and near-end noise are recorded by the right artificial ear (left side of figure 5.1). The left ear signal does not contain any speech signal, but is recorded as well. It is used for the auditory evaluation (binaural presentation) as well as for the instrumental listening effort assessment. In the second step, only the near-end noise (with DUT still mounted) is recorded (right side of figure 5.1).

NOTE: For the instrumental assessment of listening effort, the usage of the noise-only reference in the algorithm is optional, but recommended for higher prediction accuracy. However, in some applications, speech and noise may not be separately accessible.

5.4.2 Electrical recordings (sending)

The measurement setup records the degraded signal $d(k)$ at the electrical POI. Either acoustical (via HATS and terminal) or electrical insertion (via e.g. gateways or SPNF devices) are possible.

5.5 Sample presentation

5.5.1 General considerations

Besides varying background noise levels, speech signals at different levels are an included use case and can be used in the listening test. To avoid any hearing impairment in the tests, the minimum health and safety requirements regarding noise exposure according to Directive 2003/10/EC [10] shall be met. Additional guidelines on maximum playback levels are provided in ETSI EG 202 518 [i.15] and should be considered as well.

A minimum speech level is not specified, since low levels (or even non-existing signals on one ear) may be a variable under test (like, e.g. volume control settings). A default and comfortable listening level of 73 dB_{SPL} or an optimum level of 79 dB_{SPL} (see also clause 6.2.3) may be considered when no specific level is considered for the evaluation itself. Whenever possible, active speech levels should be calculated and reported according to Recommendation ITU-T P.56 [3].

For the listening test, the measured sequence according to clause 5.2 is cropped into shorter samples. Either one or two sentences (duration of 4,0 s or 8,0 s) per sample can be used for presentation to the test subjects.

5.5.2 Monaural signals

If only monaural degraded signals are available (e.g. in case of single-channel electrical recordings), diotic presentation shall be used. Similar to the case of binaural recordings, diffuse-field equalized headphones shall be used for the playback of the samples. No further listening filter shall be used.

The calibration of the signals from the electrical to the acoustical domain may differ for different technologies and applications.

EXAMPLES:

- PCM signals (wave files, codec output, etc.), -26 dBov should be mapped to 73 dB_{SPL}.
- Signal captured in a network access, -18,2 dBV / -16,0 dBm0 should be mapped to 73 dB_{SPL}.

5.6 Anchor/Reference Conditions

Reference conditions are a well-established method for conducting meaningful comparisons of auditory test results from different laboratories or from the same laboratory at different times. These conditions always include a best possible (also often denoted as *clean* or *direct*) condition, as well as conditions where known, controlled degradations have been added to the speech materials. This so-called reference system also provides specific anchor points. The *direct* condition represents the very best condition that is attainable in the experiment (is not necessarily a fullband *clean* speech signal at MRP).

A reference system set of 12 conditions shall be used, which address several degrees of listening effort and speech quality. Since the field of application of auditory assessed listening effort is quite broad, it is difficult to specify a distinct set of reference system with exactly one type of controlled degradations.

The reference conditions should not be noticed by (naïve) listeners, thus the impairments simulated should include artefacts, which are similar to the ones of the test conditions. For this purpose, annex C provides prescribed procedures for appropriate reference systems, depending on the corresponding use case scenario.

5.7 Attributes and test methodology

The instructions to the test subjects shall be presented in written form in the mother tongue of the test subjects. For presentation, e.g. text printed on paper, assessment terminal/PC or projected slides may be used. Examples for listening test instructions in different languages are given in annex A.

The listening test shall include at least one attribute for the evaluation: *listening effort*. The five-point scale and corresponding categories are given in table 5.1.

Table 5.1: Categories for listening effort (LE)

Category Description LE	Value
Complete relaxation possible; no effort required	5 (best)
Attention necessary; no appreciable effort required	4
Moderate effort required	3
Considerable effort required	2
No meaning understood with any feasible effort	1 (worst)

As a second attribute, it is recommended to include *speech quality* according to Recommendation ITU-T P.800 [1] as well. It supports the test subjects in differentiating between the near-end noise component (major impact on listening effort) of the signal and possible introduced speech degradations (minor to medium impact on listening effort), which are included in the signal-under-test. The five-point scale and corresponding categories of this attribute are given in table 5.2.

Table 5.2: Categories for speech quality (SQ)

Category Description SQ	Value
Excellent	5 (best)
Good	4
Fair	3
Poor	2
Bad	1 (worst)

In addition, several other attributes (like e.g. coloration, discontinuity, etc.) could be added to the auditory test. Further evaluations with more than two attributes are for further study.

5.8 Requirements for the listening laboratory

The listening laboratory facilities need to comply with the recommendations provided in Recommendation ITU-T P.800 [1] and the ITU-T Handbook of subjective testing practical procedures [8].

5.9 Listening test structure

Beside the 12 reference conditions, between 12 and 60 test conditions shall be included per auditory database. This reflects a reference to overall condition ratio between 17 % and 50 %. The recommended ratio equals to 20 %, i.e. referring to 48 test conditions.

At least four different samples shall be used per condition, between eight and sixteen are recommended. Each condition shall include the same number of speech samples. In order to reduce fatigue of subjects during the test, different samples per conditions can be used.

Depending on the amount of overall conditions, not all samples may be judged by each participant due to practical limit on the total test time. In this case, the listening test shall be conducted by the principle of the "balanced block design" according to [8].

At least 12 votes per sample shall be collected, 16 are recommended. Since the number of samples per condition may vary, there is no requirement on the number of votes per condition.

5.10 Reporting of results

All titles of the samples used in an auditory database shall be reported as rows in a table. As a second column, the information about the corresponding condition number (e.g. C01, C02, etc.) should be included (if applicable). All per-sample and per-condition MOS values shall be rounded to two digits for the report.

The votes per sample and per attribute are averaged and then reported as further columns in the table. In addition, the number of votes per sample, the standard deviation and the 95 % confidence interval shall be reported as well. Thus, four columns per attribute are added to the result table. An example of the per-sample result is provided in table 5.3.

Table 5.3: Example report of per-sample results

Sample	Condition	LE	Votes LE	STD(LE)	CI95(LE)	SQ	Votes SQ	STD(SQ)	CI95(SQ)
C01_m1s1	C01	2,94	16	0,44	0,24	2,29	14	0,91	0,53
C01_f1s1	C01	3,14	14	0,53	0,31	2,14	14	0,77	0,44
…	…	…	…	…	…	…	…	…	…
C48_m2s2	C48	2,19	16	0,75	0,40	2,88	16	1,02	0,55
C48_f2s2	C48	2,71	14	0,61	0,35	2,00	14	0,78	0,45

In addition, results shall be averaged per condition. Note that the aggregation of standard deviation and 95 % confidence interval is conducted according to the principles of Recommendation ITU-T P.1401 [i.3]. An example of the per-condition results is provided in table 5.4.

Table 5.4: Example report of per-condition results

Condition	LE	Votes LE	STD(LE)	CI95(LE)	SQ	Votes SQ	STD(SQ)	CI95(SQ)
C01	3,69	58	0,70	0,18	2,68	58	0,70	0,18
C02	3,77	58	0,97	0,26	2,84	58	0,97	0,26
…	…	…	…	…	…	…	…	…
C47	2,83	58	0,83	0,22	3,59	58	0,83	0,22
C48	2,56	58	0,44	0,12	1,24	58	0,44	0,12

6 Instrumental Assessment

6.1 Overview

In general, the listening effort prediction algorithm requires several input signals:

- Degraded input signal $\boldsymbol{d}(k)$: By default, this signal is a diffuse-field equalized binaural recording of noisy speech. In several applications, only a single-channel signal is available or of interest, see also clause 6.8 for monaural modes.
- Noise-only signal $\boldsymbol{n}(k)$ (optional): This signal is a diffuse-field equalized binaural recording containing only the noise of the degraded signal, but no speech. It is used in order to separate speech and noise components for the further analysis. In several applications, it may not be possible to accurately differentiate between speech and noise components by the measurement procedure described in clause 5.3. In this case, this reference signal can be omitted, a noise estimate is then calculated within the prediction algorithm. However, if possible the usage of the noise-only reference is recommended for higher prediction accuracy.
- Reference signal $r(k)$: This single-channel reference signal contains the fullband clean speech signal used for the measurement of the degraded signal, as described in clause 5.1. For the instrumental assessment, typically one or two sentences within one signal are analysed.

In the following clauses, the instrumental assessment of listening effort is described. In addition to the aforementioned input signals, several naming conventions are defined:

- Time signals are in general denoted with lowercase letters and sample index k (like e.g. $d(k)$).
- Signal representations in the frequency domain vs. time are denoted with the corresponding capital letter, frame index i (different from k) and frequency band index j (like e.g. $D(i,j)$).
- By default, the input signals $\boldsymbol{d}(k)$ and $\boldsymbol{n}(k)$ are assumed to be binaural, diffuse-field equalized signals and are formatted in bold. The same formatting is applied for time-frequency representations, e.g. $\boldsymbol{D}(i,j)$.
- Binaural signals consist of two separate signals (for left and right ear). These single-channel signals are formatted normally and marked with indices L or R, if applicable (e.g. the reference signal $r(k)$ is always monaural).

- The binaural signal is defined as a tuple of both, e.g. $\boldsymbol{d}(k) = [d_L(k), d_R(k)]$. The same formatting is applied for time-frequency representations, e.g. $\boldsymbol{D}(i,j) = [D_L(i,j), D_R(i,j)]$.
- Monaural input signals are assumed to be presented diotically to the listener. For example, a monaural input signal $d(k)$ leads to the (pseudo-)binaural signal $\boldsymbol{d}(k) = [d(k), d(k)]$.
- If the noise-only signal $\boldsymbol{n}(k)$ is used as an input, a noise-compensated but signal-processed signal $\boldsymbol{p}(k)$ is introduced during the pre-processing stage.

Figures 6.1 and 6.2 illustrate the two basic operational modes of the instrumental assessment based on the introduced naming conventions.

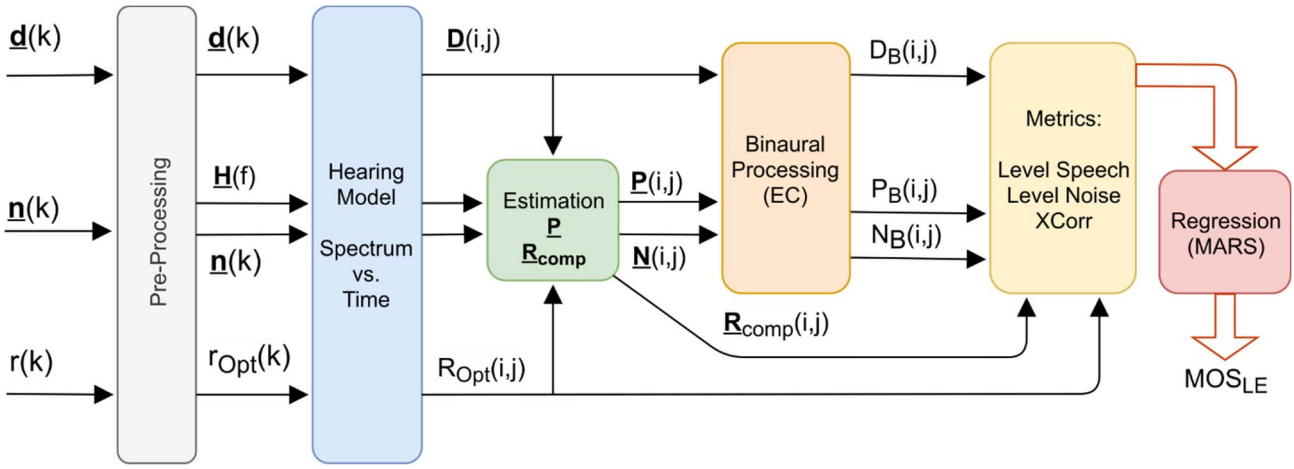

Figure 6.1: Instrumental listening effort assessment with noise-only reference

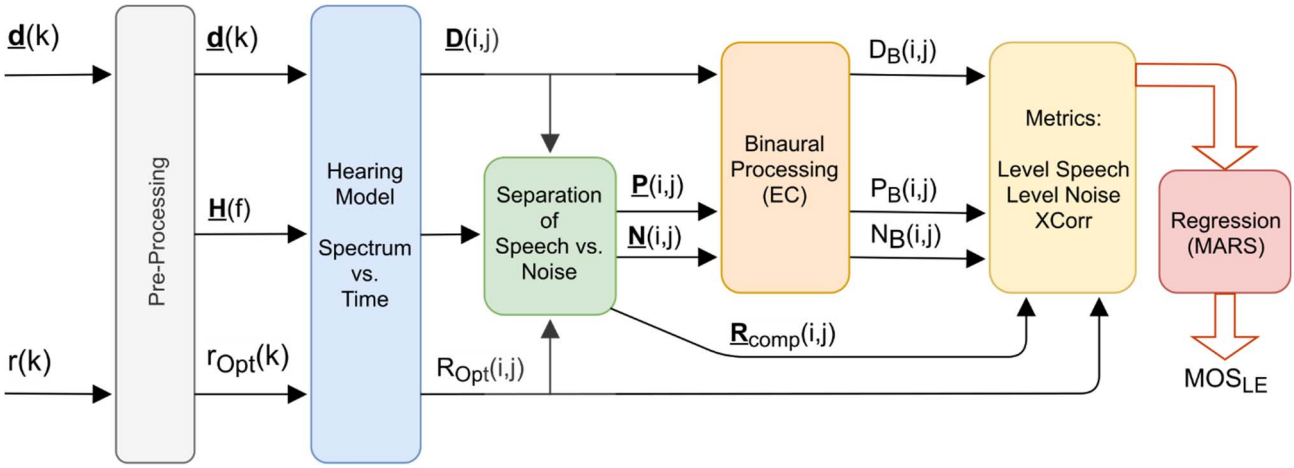

Figure 6.2: Instrumental listening effort assessment without noise-only reference

6.2 Pre-processing

6.2.1 Overview

Before performing any metric calculation and predicting listening effort scores, the input signals of the algorithm have to be prepared for the following stages.

The pre-processing of the inputs $\boldsymbol{d}(k)$, $\boldsymbol{n}(k)$ and $r(k)$ is conducted in order to compensate differences regarding temporal alignment, level offsets and spectral shaping between these signals.

The following assumptions on all input signals are made by the algorithmic pre-processing, i.e. everything different from these shall be realized by the implementer and is not specified here:

- All input signals are expected to be inserted with a sampling rate of 48 kHz into the algorithm. Resampling methodologies are not specified in the present document.
- All input signals shall have the same length, i.e. number of samples per signal. No padding or cropping strategies are specified in the present document.
- It is always assumed that the amplitudes of all signals are already calibrated to the physical unit *Pascal*. In case of electrical recordings, the (typically single-channel) signals shall be calibrated to a reasonable listening level.
- The delay between $\boldsymbol{d}(k)$ and $\boldsymbol{n}(k)$ is assumed to be zero, i.e. no time alignment between these signals is applied. This assumption is usually inherently met when using noise playback systems according to ETSI ES 202 396-1 [i.5] or ETSI TS 103 224 [i.4], which provide a high temporal reproduction accuracy.
- The recordings $\boldsymbol{d}(k)$ and $\boldsymbol{n}(k)$ are assumed to diffuse-field equalized recordings according to Recommendation ITU-T P.58 [7] obtained with a HATS.

6.2.2 Compensation of Delay

Similar as in speech quality prediction models like e.g. ETSI TS 103 281 [4] or Recommendation ITU-T P.863 [i.2], the reference signal shall be compensated for possible delays introduced by e.g. terminals, network or signal processing. This is indispensable for a valid comparison towards the reference signal at a later stage.

Since the signal $\boldsymbol{d}(k)$ is expected to be binaural, the determination of delay has to be conducted for both channels individually. For sake of simplicity, the following steps are only described for one single signal (left or right ear) indicated as $d(k)$ (without any subscript index).

Due to the high expected amount of noise portion in the degraded signal, the computational effort is higher than for speech quality metrics. First, the input signals are filtered with an IIR Butterworth band-pass of 6th order and a frequency range of 300 Hz - 3 300 Hz. By limiting bandwidth to this range, only the signal parts containing most speech energy are taken into account.

Then, the resulting band-pass filtered signals $d_{BP}(k)$ and $r_{BP}(k)$ are segmented in frames of $T = 131\ 072$ samples with 75 % overlap, resulting in $d_{BP,m}(k)$ and $r_{BP,m}(k)$. For each frame *m*, the cross-correlation function $\Phi_{dr}(m,\tau)$ between $d_{BP,m}(k)$ and $r_{BP,m}(k)$ is calculated in the time domain according to equation assuming periodic continuation of the frames.

$$\Phi_{dr}(m,\tau) = \sum_{k=1}^{T} d_{BP,m}(k) \cdot r_{BP,m}(k+\tau) \tag{1}$$

The envelope $E(m,\tau)$ is calculated by the Hilbert transformation $H\big(\Phi_{dr}(m,\tau)\big)$ of the cross-correlation according to equations (2) and (3).

$$H\big(\Phi_{dr}(m,\tau)\big) = \sum_{u=u_{min}}^{u=u_{max}} \frac{\Phi_{dr}(u)}{\pi(\tau-u)} \tag{2}$$

$$E(m,\tau) = \sqrt{\left[\Phi_{dr}(m,\tau)\right]^2 + \left[H\big(\Phi_{dr}(m,\tau)\big)\right]^2} \tag{3}$$

The per-frame envelopes are averaged over all M frames according to equation (4).

$$E(\tau) = \frac{1}{M} \cdot \sum_{m=1}^{M} E(m,\tau) \tag{4}$$

The maximum peak $\mathrm{P}_{\mathrm{max,X}}$ of $E(\tau)$ determines the delay $\mathrm{D}_{\mathrm{ref}}$ for the compensation of the reference signal on the time abscissa. These two values are determined for both channels (left and right), which is indicated with X in equations (5) and (6) (X ∈ [L, R]).

$$\mathrm{P}_{\mathrm{max,X}} = \max E_X(\tau) \tag{5}$$

$$\mathrm{D}_{\mathrm{ref,X}} = \operatorname{argmax} E_X(\tau) \tag{6}$$

Based on the peak values $\mathrm{P}_{\mathrm{max,L}}$ and $\mathrm{P}_{\mathrm{max,R}}$, the better ear/channel B (B ∈ [L, R]) and the overall maximum peak value $\mathrm{P}_{\mathrm{max}}$ are determined by the maximum of both, as shown in equation (7).

$$\mathrm{P}_{\mathrm{max}} = \max\left(\mathrm{P}_{\mathrm{max,L}}, \mathrm{P}_{\mathrm{max,R}}\right) \tag{7}$$

The final delay $\mathrm{D}_{\mathrm{ref}}$ is then defined as the delay value determined of the better channel B:

$$\mathrm{D}_{\mathrm{ref}} = \mathrm{D}_{\mathrm{ref,B}} \tag{8}$$

NOTE: In case of monaural input signals, only one delay and peak calculation is carried out. In consequence, there is also no selection of a better ear anymore, i.e. the better ear is the monaural signal itself.

The alignment is conducted by adding zeros at the beginning and cropping at the end of the reference signal $r(k)$ in case of a positive determined delay. The inverse procedure is applied in case of a negative delay.

As mentioned before, it is assumed that the delay between degraded and noise signals is zero. Thus, also the noise signal $\boldsymbol{d}(k)$ are compensated with the same delay $\mathrm{D}_{\mathrm{ref}}$ as the degraded signal.

This compensation step does not affect the degraded signal $\boldsymbol{d}(k)$, i.e. the duration of all signals is maintained in all signals.

6.2.3 Reference Scaling

Comparisons between degraded and reference signal in later stages of the prediction algorithm are carried out based on realistic listening levels. The reference signal is intended to provide an optimum regarding clear pronunciation, frequency shaping, etc., but also regarding best-possible speech level.

According to the ITU-T Handbook [9], an active speech level about -10 $\mathrm{dB_{Pa}}$ (84 $\mathrm{dB_{SPL}}$) maximizes the Listening-Effort score for monaural listening. For binaural/dichotic listening, this would refer to approximately 78 - 79 $\mathrm{dB_{SPL}}$. Thus, the reference signal $r(k)$ shall be calibrated to an active speech level according to Recommendation ITU-T P.56 [3] of 79,0 $\mathrm{dB_{SPL}}$. This scaled version of the signal is denoted as $r_{\mathrm{Opt}}(k)$ (optimal reference) in the following.

6.2.4 Speech Part Detection

In order to determine the time ranges of active speech, the classification algorithm according to Appendix II of Recommendation ITU-T G.160 [11] is applied on the reference signal $r_{\mathrm{Opt}}(k)$. The first step is to classify energy frames of 10 ms (block-wise, no overlap) according to the method described in [11]. The thresholds for the classification are defined relatively to the active speech level (in this case 79 $\mathrm{dB_{SPL}}$).

As a result, each speech frame is identified either as high (H), medium (M), low (L) or uncertain (U) activity. Frames without activity are either classified as short pauses (P) or silence (S). Short speech pauses are defined as silence periods with a duration up to 400 ms.

The speech parts are finally determined as regions excluding frames of type S, i.e. including also short pauses. The information of the active time ranges is employed in several other algorithmic parts, which are introduced in the following clauses.

6.2.5 Determination of Processed Signal

In order to analyse the impact of the possibly disturbed speech components on perceived listening effort, the influence of the noise has to be cancelled out. In case of acoustic recordings with near-end noise (i.e. not transmitted or processed), the processed but noise-free signal $\boldsymbol{p}(k)$ can be easily determined according to equation (9).

$$\boldsymbol{p}(k) = \boldsymbol{d}(k) - \boldsymbol{n}(k) \tag{9}$$

NOTE: The valid subtraction of time signals requires the usage of highly accurate noise playback systems regarding reproduction and synchronization. Systems according to ETSI ES 202 396-1 [i.5] or ETSI TS 103 224 [i.4] for example meet these claims.

6.2.6 Transfer Function

In order to characterize the transmission system of the degraded signal in the frequency domain, the complex transfer function $H(\mathrm{f})$ is utilized in later stages. Similar as for the determination of delay, the high amount of noise in the degraded signal requires some more computational effort. Again, the calculation shall be carried out for both channels L/R of $\boldsymbol{d}(k)$, but for sake of simplicity, the following steps are only described for one single signal (left or right ear), indicated as $d(k)$ (without any subscript index).

Similar as for the determination of delay, the degraded signal $d(k)$ and the optimum reference $r_{\mathrm{Opt}}(k)$ are segmented by a rectangular window in short frames of 1 024 samples and 50 % overlap. For each frame *m*, the cross-spectral density $S_{dr}(m,f)$ and the auto-spectral densities $S_{rr}(m,f)$ and $S_{dd}(m,f)$ are calculated. Then, the magnitude-squared coherence $C_{dr}(\mathrm{m},\mathrm{f})$ is calculated for each frame according to equation (10).

$$C_{dr}(m,f) = \frac{|S_{dr}(m,f)^2|}{S_{rr}(m,f)\cdot S_{dd}(m,f)} \tag{10}$$

In a similar way, the short-time transfer function $H(\mathrm{m},\mathrm{f})$ is calculated for each frame according to equation (11).

$$H(m,f) = \frac{S_{dr}(m,f)}{S_{rr}(m,f)} \tag{11}$$

NOTE 1: In literature, this calculation is also known as H1 method, as e.g. described in [i.7].

A frame is considered to contribute to the overall transfer function if the coherence $C_{dr}(\mathrm{m},\mathrm{f})$ exceeds 5 % for all frequencies between 100 Hz and 16 kHz. All contributing frames are stored in a set A, the size of this set is M_A. Finally, the average transfer function can be calculated according to equation (12).

$$H(f) = \frac{1}{M_A}\sum_{m\in A} H(m,f) \tag{12}$$

NOTE 2: For the determination of a transfer function, the usage of the processed signal $\boldsymbol{p}(k)$ instead of $\boldsymbol{d}(k)$ seems more obvious. Since it is expected that the prediction algorithm may be updated also for applications where the noise-only reference $\boldsymbol{n}(k)$ may not be available (which is necessary to obtain $\boldsymbol{p}(k)$), the analysis was designed directly for the usage with $\boldsymbol{d}(k)$. No additional case distinction is made here.

6.3 Spectral transformation

The hearing model according to Sottek [12] is calculated for the signals degraded $\boldsymbol{d}(k)$, noise-only $\boldsymbol{n}(k)$ (if applicable) and clean speech reference $r_{\mathrm{Opt}}(k)$. The transformation includes an auditory filter bank representation of the signal and a hearing-adequate envelope determination.

Table 6.1: Filterbank frequencies (in Hz) of the hearing model

	Frequency Index								
	1	**2**	**3**	**4**	**5**	**6**	**7**	**8**	**9**
Lower	31,5	111,3	203,2	308,9	430,4	570,2	731,1	916,1	1 128,9
Center	70,0	155,7	254,2	367,5	497,9	647,8	820,3	1 018,7	1 247,0
Upper	111,3	203,2	308,9	430,4	570,2	731,1	916,1	1 128,9	1 373,6
	10	**11**	**12**	**13**	**14**	**15**	**16**	**17**	**18**
Lower	1 373,6	1 655,2	1 979,1	2 351,6	2 780,1	3 273,0	3 840,0	4 492,2	5 242,4
Center	1 509,5	1 811,5	2 158,8	2 558,4	3 018,0	3 546,6	4 154,7	4 854,2	5 658,8
Upper	1 655,2	1 979,1	2 351,6	2 780,1	3 273,0	3 840,0	4 492,2	5 242,4	6 105,4
	19	**20**	**21**	**22**	**23**	**24**	**25**	**26**	
Lower	6 105,4	7 098,0	8 239,7	9 553,1	11 063,8	12 801,6	14 800,4	17 099,7	
Center	6 584,3	7 648,9	8 873,4	10 282,0	11 902,3	13 766,0	15 909,8	18 375,8	
Upper	7 098,0	8 239,7	9 553,1	11 063,8	12 801,6	14 800,4	17 099,7	19 744,5	

Table 6.1 lists the centre frequencies (in Hz) as well as the bandwidth of the 26 frequency bands of the auditory filter bank. In contrast to other hearing-adequate frequency scales, the proposed method includes the whole fullband (FB) range.

Each frequency band of the hearing model is temporally aggregated to frames of 1 ms by calculating the average across 48 output samples (no overlap).

This time-frequency representations is calculated for all pre-processed signals individually for left and right ear, resulting in the hearing model spectra vs time $\boldsymbol{D}(i,j)$ (degraded), $\boldsymbol{N}(i,j)$ (noise-only, if applicable), $\boldsymbol{P}(i,j)$ (processed, if applicable) and $R_{\mathrm{Opt}}(i,j)$ (reference scaled to optimum level).

6.4 Compensated Reference

Based on the transfer function $H(f)$ and the hearing model spectrum $R_{\mathrm{opt}}(i,j)$ of the optimum reference, a so-called compensated reference $R_{\mathrm{Comp}}(i,j)$ spectrum vs time is determined. First, a linearly interpolated version $\widetilde{\boldsymbol{H}}(j)$ is calculated from the transfer function $\boldsymbol{H}(f)$, which uses the same frequency resolution as the hearing model. The compensated reference is then calculated as per equation (13). It represents a filtered version of the reference, which has the same spectral shaping as the degraded signal, but without any further degradations (e.g. due to non-linear signal processing).

$$\boldsymbol{R}_{\mathrm{Comp}}(i,j) = \widetilde{\boldsymbol{H}}(j) \cdot R_{\mathrm{opt}}(i,j) \tag{13}$$

6.5 Separation of Speech and Noise Component

In case no noise-only signal $\boldsymbol{n}(k)$ is provided, in consequence also no processed signal $\boldsymbol{p}(k)$ is available. Thus, the corresponding hearing model spectra $\boldsymbol{N}(i,j)$ and $\boldsymbol{P}(i,j)$ are estimated based on the available inputs. Equation (14) shows the basic assumption of the composition.

$$\boldsymbol{D}(i,j) = \boldsymbol{P}(i,j) + \boldsymbol{N}(i,j) \tag{14}$$

For the decomposition, a (pseudo-)Wiener filter is used for the determination of $\boldsymbol{P}(i,j)$ as shown in equation (15).

$$\boldsymbol{P}(i,j) = \boldsymbol{D}(i,j) \cdot \boldsymbol{W}(i,j) \tag{15}$$

The Wiener gain $\boldsymbol{W}(i,j)$ is obtained according to equation (16). The compensated reference $\boldsymbol{R}_{\mathrm{Comp}}(i,j)$ and an initial noise estimation $\widetilde{\boldsymbol{N}}(i,j)$ is used.

$$\boldsymbol{W}(i,j) = \sqrt{\frac{\boldsymbol{R}_{\mathrm{Comp}}(i,j)^2}{\boldsymbol{R}_{\mathrm{Comp}}(i,j)^2 + \widetilde{\boldsymbol{N}}(i,j)^2}} \tag{16}$$

For the determination of $\widetilde{\boldsymbol{N}}(i,j)$, first a soft mask $\boldsymbol{M}(i,j)$ of active/inactive time-frequency bins is determined with $\boldsymbol{R}_{\mathrm{Comp}}(i,j)$. The speech part classification algorithm according to Appendix II of Recommendation ITU-T G.160 [11] is carried out for each frequency band of the hearing model spectrum vs. time (see also clause 6.2.4). For silent (S) and short-paused (P) frames, a mask value of 1, for high activity of speech to 0 is set. Weights for medium (M), low (L) and uncertain (U) activity frames are provided in table 6.2. An example of this threshold-based method for one single frequency band is illustrated in figure 6.3.

Table 6.2: Mask weights of activity

Activity	Value
H	0,0
M	0,15
L	0,4
U	0,7
P, S	1,0

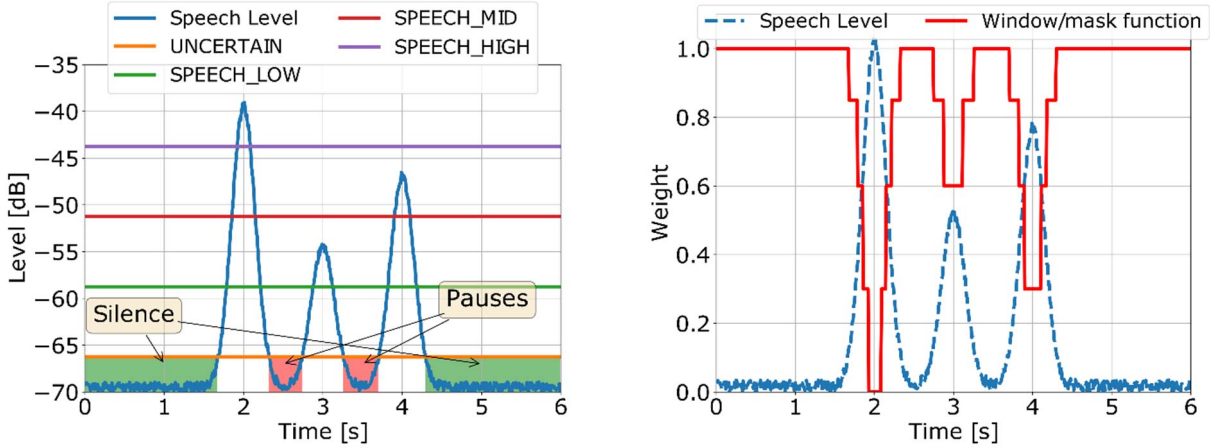

Figure 6.3: Principle of frame classification (left) and mask generation (right)

NOTE: For sake of clarity, time-frequency indices (i, j) are neglected until the end of this clause.

Then, the degraded spectra are multiplied by the masks, resulting in $\boldsymbol{M_D}$ as per equation (17). This step suppresses the active speech frames and can be considered as a windowed noise signal.

$$\boldsymbol{M_D} = \boldsymbol{D} \cdot \boldsymbol{M} \approx \boldsymbol{N} \cdot \boldsymbol{M} \tag{17}$$

With the Fourier operator $\boldsymbol{\mathcal{F}}(\cdot)$, an estimate for the noise signal per frequency band can be described as a deconvolution problem (denoted as $\{\cdot\}^{-1}$), as shown in equations (18) to (20).

$$\boldsymbol{M_D} \circ\!\!-\!\!\bullet\ \boldsymbol{\mathcal{F}}(\boldsymbol{M_D}) = \boldsymbol{\mathcal{F}}(\boldsymbol{N}) * \boldsymbol{\mathcal{F}}(\boldsymbol{M}) \tag{18}$$

$$\Leftrightarrow \boldsymbol{\mathcal{F}}(\boldsymbol{N}) = \{\boldsymbol{\mathcal{F}}(\boldsymbol{M_D}) * \boldsymbol{\mathcal{F}}(\boldsymbol{M})\}^{-1} \tag{19}$$

$$\Rightarrow \widetilde{\boldsymbol{N}} \approx \boldsymbol{N} = \boldsymbol{\mathcal{F}}^{-1}\left(\{\boldsymbol{\mathcal{F}}(\boldsymbol{M_D}) * \boldsymbol{\mathcal{F}}(\boldsymbol{M})\}^{-1}\right) \tag{20}$$

In general, multiple deconvolution algorithms are available in literature. For the current prediction model, the algorithm described in e.g. [13] is used. The estimated noise spectra $\widetilde{\boldsymbol{N}}(i, j)$ are used for the Wiener filter according to equation (15) in order to obtain finally the processed spectra $\boldsymbol{P}(i, j)$.

6.6 Binaural processing

In order to address the capability of human hearing to improve SNR compared to monaural listening, a binaural processing stage is included in the prediction model. The spectral components for left and right ears are combined by a short-term equalization-cancellation (STEC) model according to [14]. This extension of the well-known model of Durlach [15] requires the availability of the isolated speech and masker (noise-only) components, i.e. processed and noise spectra.

The STEC model is employed exactly as described in [14], with only one slight modification: an increased block size constant of 100 ms (instead of 20 ms) is used. A reference implementation can be found in [i.8].

As a result of this stage, combined and enhanced hearing model spectra vs time are available:

- $D_B(i, j)$ (degraded).
- $P_B(i, j)$ (processed).
- $N_B(i, j)$ (noise).
- $R_{B,\mathrm{comp}}(i, j)$ (compensated reference).

NOTE: The spectra of the optimum reference is not processed via the EC-model.

6.7 Instrumental Assessment

6.7.1 Metrics

6.7.1.1 Level Metrics

Since the hearing model spectra for processed speech and noise component are individually available, level metrics can be calculated in the frequency domain. The active speech level S_{act} is calculated according to equation (21) on the processed signal across all frequencies. Only active time frames (ACT) according to clause 6.2.4 are considered in this integration and K_{ACT} denotes the number of active frames.

$$S_{\mathrm{act}} = 10 \cdot \log_{10}\left(\frac{1}{K_{ACT}} \sum_{j \in ACT} \sum_{i} \; P_B(i,j)^2\right) \tag{21}$$

In addition, an A-weighted noise level $L_N(\mathrm{A})$ is calculated from the noise spectrum according to equation (22). The weighting $W_A(j)$ for each frequency band is calculated according to IEC 61672-1 [20].

$$L_N(\mathrm{A}) = 10 \cdot \log_{10}\left(\frac{1}{K_{ALL}} \sum_{j} \sum_{i} \; W_A(j) \cdot N_B(i,j)^2\right) \tag{22}$$

The integration is carried out across all frequencies and all-time indices. Here K_{ALL} denotes the overall number of frames of the hearing model spectrum.

6.7.1.2 Spectral Distance Metric

In order to investigate the relation and possible masking effects of the processed ($P_B(i,j)$) and noise ($N_B(i,j)$) spectra vs time, a similar index metric as in the calculation method according to ANSI S3.5 [18] is described in the following.

The method of [18] provides a speech intelligibility index (SII), which is intended for the usage of stationary noises in conjunction with a constant average speech spectrum. The method is adapted for time-variant speech and noise signals with the following modifications:

- The hearing model spectra vs time is analysed per identified sentence (see clause 6.2.4). Each time instance is analysed according to ANSI S3.5 [18].
- The calculation variant is based on 1/3rd octave-bands, including the corresponding band importance weights (see table 3 of [18]). Since frequencies higher than 8 kHz are needed, 1/3rd octave-bands up to 20 kHz are generated according to IEC 61260-1 [19].
- The band importance weights are interpolated to the fullband 1/3rd octave-bands by a cubic interpolation (see below). Since the sum of the weights is not 1 after this interpolation, they are re-normalized by dividing each value by the sum of the new weights.
- The pre-processing of [18] only describes free-field-to-DRP correction (last column of e.g. table 2 in [18]). Instead, table 3 of Recommendation ITU-T P.58 [7] for diffuse-field-to-DRP correction is used.
- Each short-time spectrum of speech and noise of the hearing model is interpolated to 1/3rd octave-bands by a cubic interpolation (see below).
- If more than one sentence is included in the speech sample, a weighted average across the metrics per sentence is performed. The weight per sentence corresponds to its duration.

Thus, the analysis provides one single metric output, denoted as I_{SD} in the following.

For some of the above steps, a cubic interpolation method vs frequency is required. The interpolation itself is a quite common technique, as described e.g. in [i.11]. The interpolation function $f_{\mathrm{I}}(\cdot)$ depends on several input variables, as shown in equation (23).

$$y_{\mathrm{new}} = f_{\mathrm{I}}\left(x_{\mathrm{new}}, x_{\mathrm{existing}}, y_{\mathrm{existing}}\right) \tag{23}$$

With:

x_{existing}: the existing frequency axis f, but inserted on logarithmic scale: $\log_{10}(f)$.

y_{existing}: the existing ordinate values (e.g. spectral magnitude).

x_{new}: the frequency axis to interpolate for, but inserted on logarithmic scale: $\log_{10}(f_{new})$.

y_{new}: the interpolated ordinate values (e.g. spectral magnitude).

NOTE: The logarithmic operator on the frequencies take the (approximately) logarithmic spacing between frequency bands into account.

In case y_{existing} represents a (short-time) spectrum (e.g. $Z(j)$), the interpolated version $\dot{Z}(j')$ shall have the same energy as the original one. This is ensured by scaling the interpolated version by a gain factor g_S, as shown in equations (24) and (25).

$$g_S = \sqrt{\sum_j Z(j)^2 \Big/ \sum_j \dot{Z}(j')^2} \tag{24}$$

$$\ddot{Z}(j') = g_S \cdot \dot{Z}(j') \tag{25}$$

Figure 6.4 illustrates the principle of interpolation to 1/3rd octave-bands and provides two examples. The graph on the left shows the interpolation for the band importance weights, while the graph on the right demonstrates the transformation of a short-time spectrum. The solid blue lines indicate data from another frequency range, the orange dashed curves show the results in 1/3rd octave-bands after interpolation.

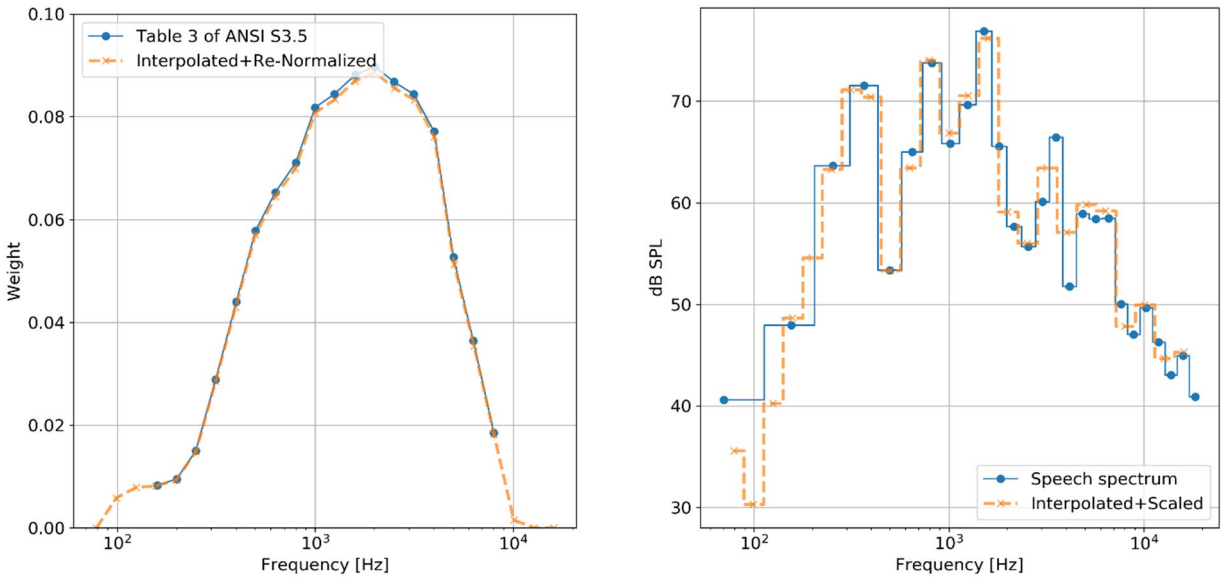

Figure 6.4: Examples of interpolation for weights (left) and spectrum (right)

6.7.1.3 Correlation Metrics

Similar as the intelligibility metric introduced in e.g. [i.9], a spectral cross-correlation is carried out in four different ways. Instead of the clipping procedure described in [i.9], the threshold of hearing $T_H(j)$ according to ISO 389-7 [17] is applied to the spectra. After this step, the non-linear loudness transformation $\mathcal{L}[\cdot]$ according to the hearing model of Sottek [12] or annex K of ETSI EG 202 396-3 [i.10]) is applied on all spectra, as shown in equations (26) to (29).

$$D'_B(i,j) = \mathcal{L}[max(D_B(i,j),\ T_H(j))] \tag{26}$$

$$P'_B(i,j) = \mathcal{L}[max(P_B(i,j),\ T_H(j))] \tag{27}$$

$$R'_{\text{Opt}}(i,j) = \mathcal{L}\big[max(R_{\text{Opt}}(i,j),\ T_H(j))\big] \tag{28}$$

$$R'_{B,\mathrm{Comp}}(i,j) = \mathcal{L}\left[max(R_{B,\mathrm{Comp}}(i,j),\ T_H(j))\right] \tag{29}$$

NOTE: In contrast to [i.9], no further normalization is necessary, since the data is already provided on an absolute loudness scale.

Each band is divided into sub-frames of 320 ms (L=320 frames, only active indices, see clause 6.7.1.1) with 50 % overlap. In general, the correlation metric $d_{X,Y}(m,j)$ between two (generic) spectra $X(i,j)$ and $Y(i,j)$ is calculated per frequency band *j* and for the *m*-th sub-frame as given by equations (30) to (32).

$$d_{X,Y}(m,j) = \frac{\sum_{n\in m}\left(X(n,j)-\bar{X}(m,j)\right)\left(Y(n,j)-\bar{Y}(m,j)\right)}{\sqrt{\sum_{n\in m}\left(X(n,j)-\bar{X}(m,j)\right)^2 \cdot \sum_{n\in m}\left(Y(n,j)-\bar{Y}(m,j)\right)^2}} \tag{30}$$

With:

$$\bar{X}(m,j) = \frac{1}{L}\sum_{l\in m} X(l,j) \tag{31}$$

$$\bar{Y}(m,j) = \frac{1}{L}\sum_{l\in m} Y(l,j) \tag{32}$$

Equation (33) provides the final aggregation to an overall metric $d_{X,Y}$.

$$d_{X,Y} = \frac{1}{L\cdot J}\sum_{l\in m}\sum_{j} d_{X,Y}(m,j) \tag{33}$$

With $X(i,j) \in [D'_B(i,j), P'_B(i,j)]$ and $Y(i,j) \in \left[R'_{B,\mathrm{Comp}}(i,j), R'_{\mathrm{Opt}}(i,j)\right]$, four metrics according to table 6.3 can be derived by this analysis.

Table 6.3: Combinations of signals for correlation metrics

Title	Spectrum #1	Spectrum #2	Description
d_{D,R_C}	$D'_B(i,j)$	$R'_{B,\mathrm{Comp}}(i,j)$	Noisy speech vs optimum reference
d_{D,R_O}	$D'_B(i,j)$	$R'_{\mathrm{Opt}}(i,j)$	Noisy speech vs compensated reference
d_{P,R_C}	$P'_B(i,j)$	$R'_{B,\mathrm{Comp}}(i,j)$	Noise-free/processed speech vs optimum reference
d_{P,R_O}	$P'_B(i,j)$	$R'_{\mathrm{Opt}}(i,j)$	Noise-free/processed speech vs compensated reference

6.7.2 Regression

In order to combine all metrics described in the previous clauses, multivariate adaptive regression splines (MARS) according to [16] are used. Table 6.4 provides a summary of all metrics used for the regression. Beside the seven parameters, an eighth input F_N is shown here. This parameter is a flag indicating if the noise-only reference was provided or not. In the latter case, the noise-only spectrum was internally estimated by the algorithm described in clause 6.5. This additional bit of information supports the regression in order to compensate for smaller errors in the separation algorithm.

Table 6.4: Metrics used for regression

Variable	Title	Clause	Description
x_0	S_{act}	6.7.1.1	Speech- and Noise Levels
x_1	$L_N(\mathrm{A})$	6.7.1.1	
x_2	I_{SD}	6.7.1.2	Spectral distance, similar to SII
x_3	d_{D,R_C}	6.7.1.3	Correlation-based similarity metrics
x_4	d_{D,R_O}	6.7.1.3	
x_5	d_{P,R_C}	6.7.1.3	
x_6	d_{P,R_O}	6.7.1.3	
x_7	F_N		Flag: equals 1, if noise-only was provided (otherwise 0)

The MARS regression provides result is a human-readable formula, based on hinge functions, like e.g. $h_n(x_i) = a_n \cdot \max(0, c_n - x_i)$ or $h_n(x_i) = a_n \cdot \max(0, x_i - c_n)$. The regression output is the sum of terms. A single term is defined as the multiplication of two or more fitted hinge functions or input variables. The order of a term may vary between zero (bias only) and three (up to three hinge functions and one bias are multiplied). The amount of terms is limited to 32.

Based on parameter fitting according to the auditory data shown in annex C, $\mathrm{MOS_{LE}}$ can be determined according to the calculation shown in equation (34).

$$
\begin{aligned}
\mathrm{MOS_{LE}} = {} & 5{,}195 \\
& -0{,}007 \cdot x7 \cdot \max(0;\ -x1 - 32{,}92) - 0{,}0421 \cdot x7 \cdot \max(0;\ x1 + 32{,}92) \\
& - 2{,}78 \cdot x7 \cdot \max(0;\ x3 - 0{,}565) + 2{,}04 \cdot x7 \cdot \max(0;\ x6 - 0{,}71) \\
& + 0{,}356 \cdot x7 - 1{,}886 \cdot \max(0;\ 0{,}131 - x3) \cdot \max(0;\ 0{,}307 - x5) \cdot \max(0;\ x1 + 64{,}98) \\
& + 0{,}600 \cdot \max(0;\ 0{,}307 - x5) \cdot \max(0;\ x1 + 64{,}98) \cdot \max(0;\ x3 - 0{,}131) \\
& - 0{,}124 \cdot \max(0;\ 0{,}307 - x5) \cdot \max(0;\ x1 + 64{,}98) \\
& - 0{,}044 \cdot \max(0;\ 0{,}562 - x4) \cdot \max(0;\ 0{,}886 - x6) \cdot \max(0;\ x1 + 64{,}98) \\
& + 0{,}043 \cdot \max(0;\ 0{,}589 - x2) \cdot \max(0;\ 0{,}886 - x6) \cdot \max(0;\ x1 + 64{,}98) \\
& - 1{,}133 \cdot \max(0;\ 0{,}624 - x2) \\
& - 0{,}178 \cdot \max(0;\ 0{,}886 - x6) \cdot \max(0;\ x1 + 64{,}98) \cdot \max(0;\ x2 - 0{,}589) \\
& - 0{,}242 \cdot \max(0;\ 0{,}886 - x6) \cdot \max(0;\ x1 + 64{,}98) \cdot \max(0;\ x4 - 0{,}562) \\
& + 0{,}096 \cdot \max(0;\ 0{,}886 - x6) \cdot \max(0;\ x1 + 64{,}98) \\
& - 0{,}0403 \cdot \max(0;\ -x0 - 19{,}93) \\
& + 0{,}0068 \cdot \max(0;\ -x0 - 15{,}498) \cdot \max(0;\ x1 + 64{,}98) \cdot \max(0;\ x5 - 0{,}307) \\
& + 0{,}0362 \cdot \max(0;\ x0 + 15{,}498) \cdot \max(0;\ x1 + 64{,}98) \cdot \max(0;\ x5 - 0{,}307) \\
& - 3901{,}55 \cdot \max(0;\ x0 + 19{,}93) \cdot \max(0;\ -x1 - 75{,}46) \\
& - 0{,}036 \cdot \max(0;\ x0 + 19{,}93) \\
& + 0{,}0413 \cdot \max(0;\ -x1 - 64{,}98) \\
& - 0{,}109 \cdot \max(0;\ x1 + 64{,}98) + 1{,}713 \cdot \max(0;\ x2 - 0{,}624)
\end{aligned}
\tag{34}
$$

6.8 Model modes for monaural signals

For the introduced model, one or two binaural inputs (noisy speech and optionally noise-only) and one single-channel reference signal are needed. In several applications, only one ear signal is available or is of interest. In this case, the model can be run with the following simplifications:

1) Monaural mode: For terminals in handset or headset mode, the speech signal in receiving direction is only audible on one - usually right - ear. The other/left ear remains uncovered, thus no speech but noise-only is active. In this case, the noise-only recording (or estimated spectrum) of the right ear can be used as a replacement for the left ear input. The processed signal (and spectrum vs time) is set to zero in this case.

2) Diotic mode: Similar to other loudness or quality prediction models, it is assumed that single-channel signals are played back diotically, i.e. the stimulus is presented on both ears. In this case, the model can be evaluated just with two or three single-channel input signals (noisy speech, noise-only, reference), assumed to be presented on both ears.

Annex A (informative): Translations of attributes, categories and instructions

A.1 Overview

This annex provides guidelines for listening tests according to clause 5. Example instructions to test subjects as well as labels for attributes and categories are provided in multiple languages. While categories and attributes only depend on the language, listening test instructions also may vary for different applications, i.e. these are intended to explain the acoustic scenario to the listener.

If listening tests are conducted in languages that are not specified here, a suitable translation has to be created.

A.2 English Translation

A.2.1 Attributes and categories

Instruction/questionnaire: "Effort required to understand the meanings of sentences" (table A.1).

Table A.1: Categories for listening effort (LE)

Category Description LE	Value
Complete relaxation possible; no effort required	5 (best)
Attention necessary; no appreciable effort required	4
Moderate effort required	3
Considerable effort required	2
No meaning understood with any feasible effort	1 (worst)

Instruction/questionnaire: "Please mark your opinion of the speech sample you have just been listening" (table A.2).

Table A.2: Categories for speech quality (SQ)

Category Description SQ	Value
Excellent	5 (best)
Good	4
Fair	3
Poor	2
Bad	1 (worst)

A.2.2 Listening test instructions

EXAMPLE 1: In-car communication.

"Imagine that you are sitting in a vehicle as a passenger or in the back seat. You try to talk to the driver, who cannot turn around while driving. Please rate in the following listening test how much you have to strain to understand the driver, respectively to follow the conversation."

EXAMPLE 2: Handset/hands-free (mobile devices).

"Imagine that you are traveling in a variety of environments, such as e.g. in a café/restaurant, at the train station or on the street. You try to make a phone call despite the many surrounding noises. Please rate in the following listening test how much you have to strain to understand the talker on the call, respectively to follow the conversation."

A.3 German Translation

A.3.1 Attributes and categories

Instruction/questionnaire: "Wie würden Sie die erforderliche Anstrengung beschreiben, um dem Gesprächspartner zu folgen?" (table A.3).

Table A.3: Categories for listening effort (LE)

Category Description LE (long)	(short)	Value
Keine Anstrengung notwendig	Keine	5 (best)
Geringe Anstrengung notwendig	Gering	4
Mäßige Anstrengung notwendig	Mäßig	3
Beträchtliche Anstrengung notwendig	Groß	2
Trotz Anstrengung Bedeutung nicht verstanden	Maximal/nicht verstanden	1 (worst)

Instruction/questionnaire: "Wie würden Sie die Sprachqualität des Hörbeispiels bewerten?" (table A.4).

Table A.4: Categories for speech quality (SQ)

Category Description SQ	Value
Ausgezeichnet	5 (best)
Gut	4
Ordentlich	3
Dürftig	2
Schlecht	1 (worst)

A.3.2 Listening test instructions

EXAMPLE 1: In-car communication.

"Stellen Sie sich vor, Sie sitzen in einem Fahrzeug als Beifahrer oder auf der Rückbank. Sie versuchen, sich mit dem Fahrer zu unterhalten, welcher sich aber während der Fahrt nicht zu Ihnen umdrehen kann. Bitte bewerten Sie im folgenden Hörversuch, wie sehr Sie sich anstrengend müssen, um den Fahrer zu verstehen bzw. um den Gespräch folgen zu können."

EXAMPLE 2: Handset/hands-free (mobile devices).

"Stellen Sie sich vor, Sie sind in den unterschiedlichsten Umgebungen unterwegs, wie z.B. in einem Café/Restaurant, am Bahnhof oder an der Straße. Dabei versuchen Sie, trotz der vielen Umgebungsgeräusche ein Telefonat zu führen. Bitte bewerten Sie im folgenden Hörversuch, wie sehr Sie sich anstrengend müssen, um den anderen Gesprächsteilnehmer zu verstehen bzw. um den Gespräch folgen zu können."

Annex B (normative): Reference systems for listening tests

B.1 Overview

This annex provides several reference systems, which can be considered for listening tests according to clause 5 of the present document. The designer of the test should select one of the following methods, which fits best to the considered scope of the evaluation, i.e. the types of devices, acoustic scenario, etc.; in the same way, a suitable background noise should be selected for the current application (e.g. car noise for listening test dealing with ICC). Thus, concrete background noises are not specified in the following clauses, only levels or SNRs are provided. In case of no suitable reference system can be selected, references according to clause C.2 are recommended.

NOTE 1: All information on background noises (levels and/or SNRs) refers to A-weighted levels.

NOTE 2: If not specified otherwise, the active speech level according to Recommendation ITU-T P.56 [3] (excluding background noise) is assumed as -21 dB_{Pa} / 73 dB_{SPL} for diotic and -15 dB_{Pa} / 79 dB_{SPL} for monaural presentation.

B.2 MNRU

The Recommendation ITU-T P.810 [21] describes the reference disturbance "modulated noise reference unit" (MNRU). The degradation is controlled by a factor Q, usually specified in dB. The factor describes an attenuation of a biased noise, which is multiplied to the time signal. For bandwidths extending WB (SWB or FB), speech-shaped noise according to the weighting described in Recommendation ITU-T P.50 [22] shall be used (see Recommendation ITU-T P.Imp830 [23] as well for further reference). The 12 reference conditions for combined LE and SQ evaluations are provided in table B.1.

Table B.1: Reference conditions for MNRU

Condition	Q [dB]	SNR (A) [dB]	Comment
R01	-	-	Direct reference
R02	-	0	Lowest anchor for LE
R03	-	12	[…]
R04	-	24	[…]
R05	-	36	Second-best anchor for LE
R06	8	-	Lowest anchor for SQ
R07	24	-	[…]
R08	32	-	[…]
R09	40	-	Second-best anchor for SQ
R10	32	24	Second-best anchor overall
R11	24	12	[…]
R12	8	0	Lowest anchor overall

This reference system should be used if no other suitable system is available. The resulting single-channel signals shall be played back diotically for the presentation in the listening test.

B.3 Wiener Filter Approach

In annex D of ETSI TS 103 281 [4], a reference system for SWB and FB systems is described. For NB and WB devices, a band-limited adaptation of the method can be found in ETSI TS 103 106 [i.6]. Table B.2 provides the processing settings, which are used to obtain the degradations for the reference system.

Table B.2: Reference conditions for noise reduction application

Condition	Speech Distortion	SNR (A) [dB]	Comment
R01	-	-	Direct reference
R02	-	0	Lowest anchor for LE
R03	-	12	[…]
R04	-	24	[…]
R05	-	36	Second-best anchor for LE
R06	NS Level 1	-	Lowest anchor for SQ
R07	NS Level 2	-	[…]
R08	NS Level 3	-	[…]
R09	NS Level 4	-	Second-best anchor for SQ
R10	NS Level 3	24	Second-best anchor overall
R11	NS Level 2	12	[…]
R12	NS Level 1	0	Lowest anchor overall

This system is typically used for listening test databases where noise suppression algorithms are evaluated. The reference distortions introduced here are based on several degrees of aggressiveness of a Wiener filter, which is applied on clean speech signals. Since these kinds of processing artefacts are expected mainly for the sending direction of terminals, a frequent usage for listening tests according to clause 5 is not expected.

The resulting single-channel signals shall be played back diotically for the presentation in the listening test.

B.4 Reverb Artefacts

For the auditory evaluation of e.g. ICC applications, neither the Wiener filter nor the MNRU degradations sound similar to typical artefacts created by reverb and feedback cancellation of such setups and systems.

The following descriptions of artefacts are based on ICC systems, but can be generalized to other speech enhancement systems used in rooms.

In general, ICC systems should support and ease the communication between driver and passengers in the first or second row. The driver's voice is recorded via a microphone, usually the same as for the car hands-free system. The speech signal is then processed and played back over the loudspeakers close to the listener position. Thus, the perceived speech signal at the listener position is a superposition of the direct sound, the processed/reinforced signal and ambient noise. Figure B.1 illustrates the three contributions to the overall signal.

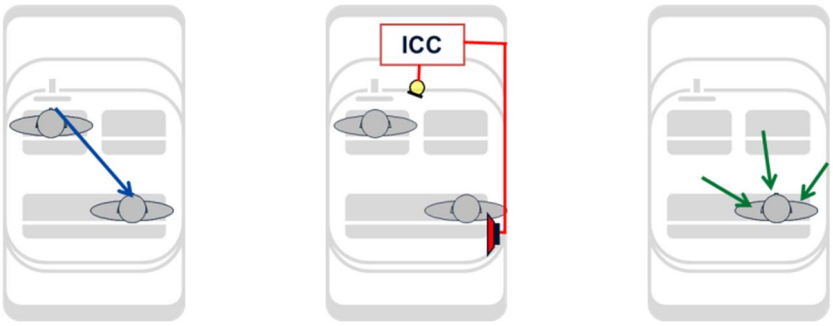

a) Direct **b) Reinforcement** **c) Noise**

Figure B.1: Signal contributions at listener position

For the generation of listening samples, a simplified ICC model according to figure B.2 is used. As an input signal $s(k)$, monaural speech samples recorded at the MRP shall be used (like provided in e.g. [5] or [4]). For the direct path of the acoustic transmission from the driver to the listener, a binaural impulse response (IR) according to the ortho-reference condition is applied on the speech signal (see clause 1.4.1 of [9]). Even though this convolution does not represent the acoustics of a typical car cabin, at least some auditory spaciousness is introduced into the signal and binaural perception is facilitated. Finally, the direct sound is scaled to an active speech level of S_{dir} (in dB) according to Recommendation ITU-T P.56 [3] in order to simulate an acoustic loss between talker and listener.

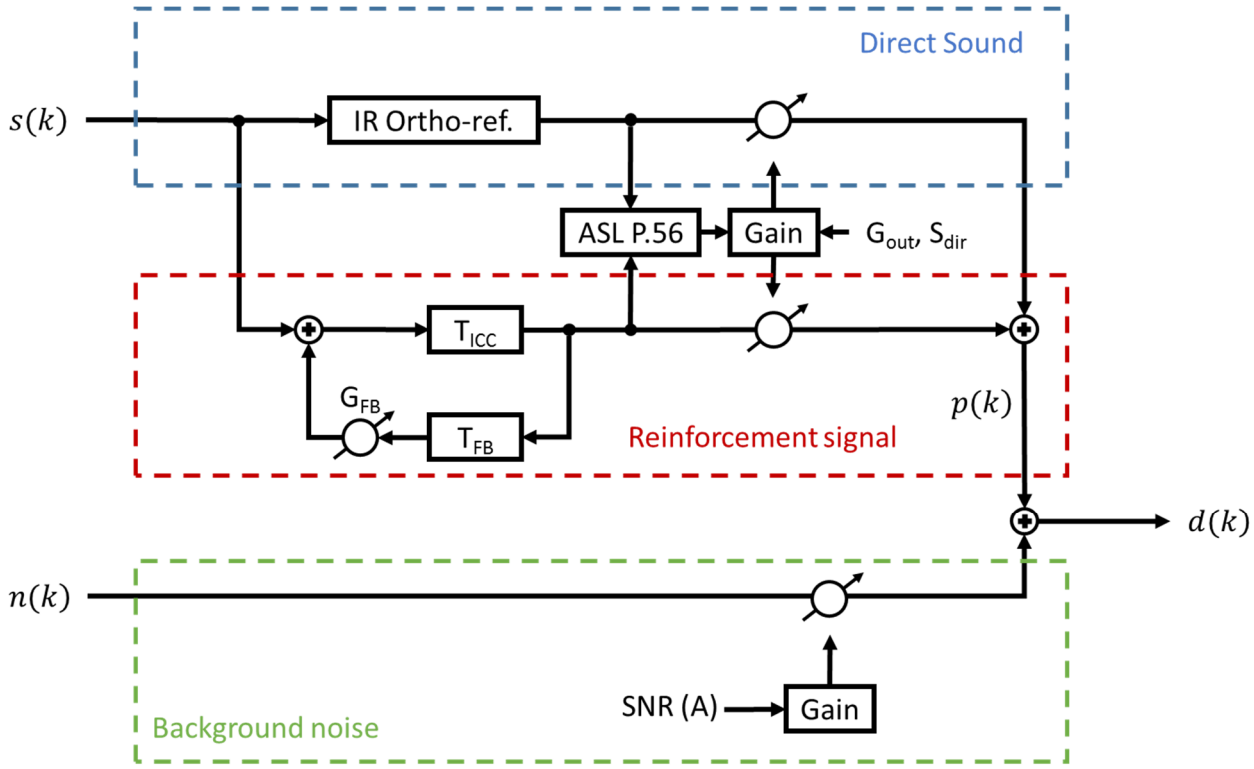

Figure B.2: Simplified ICC model for sample generation

The transmission path of the ICC system is modelled by a delay T_{ICC}, which reflects a virtual processing delay. The acoustic feedback path is approximated by the delay T_{FB} and a damping constant G_{FB} (in dB). The feedback delay T_{FB} is derived from the distance between loudspeakers to the microphone, usually in the range of 4 ms (about 1,40 m distance). The whole feedback loop can be realized as a direct form II filter with the coefficients specified in equations (B.1) to (B.3) (with signal sampling rate F_S); all other non-specified coefficients are set to zero.

$$a[0] = 1 \tag{B.1}$$

$$a[int(F_S \cdot (T_{ICC} + T_{FB}))] = 10^{\frac{G_{FB}}{20}} \tag{B.2}$$

$$b[int(F_S \cdot T_{ICC})] = 1 \tag{B.3}$$

The level of the reinforcement signal is then adjusted in order to provide an amplification G_{out} (in dB) compared to the direct sound. The target active speech level S_{ri} of the reinforcement signal is defined according to equation (B.4).

$$S_{ri} = 20 \cdot \log_{10}\left[(10^{\frac{G_{out}}{10}} - 1) \cdot 10^{\frac{S_{dir}}{20}}\right] \tag{B.4}$$

EXAMPLE: The active speech level of the direct sound S_{dir} is set to 67 dB_{SPL} and the desired gain of the system is +2 dB. According to equation (B.4), the active speech level S_{ri} of the reinforcement signal is calculated to 62,3 dB_{SPL}.

The processed signal $p(k)$ is calculated as the sum of the direct sound and the reinforcement signal. It contains typical ICC processing artefacts caused by the (artificial) feedback cancellation. The degree of speech degradation can be controlled by the delays T_{ICC} / T_{FB}, the gains G_{FB} / G_{out} and the level of the direct sound S_{dir}.

Finally, background noise is added in order to obtain the degraded signal $d(k)$. With the knowledge of the overall speech level (direct sound plus reinforcement), the level of the noise is scaled according to a given SNR. The noise level shall be calculated including A-weighting.

Table B.3 provides an exemplary processing set for the 12 reference conditions which should cover a wide range for speech quality and listening effort. Note that in some cases no reinforcement signal is used; in these cases, G_{out} is set to negative infinity (-inf.) and the other parameters of the feedback path are not specified.

Table B.3: Reference conditions for noise reduction application

Condition	T_{ICC} [ms]	T_{FB} [ms]	G_{FB} [dB]	G_{out} [dB]	S_{dir} [dB_{SPL}]	SNR (A) [dB]	Comment
R01				-inf.	70	-	Direct reference
R02				-inf.	61	-10	Lowest anchor for LE
R03				-inf.	64	-4	[…]
R04				-inf.	67	2	[…]
R05				-inf.	70	8	Second-best anchor for LE
R06	25	4	-2,8	3	67	-	Lowest anchor for SQ
R07	16	4	-2,8	2	67	-	[…]
R08	8	4	-3,8	2	67	-	[…]
R09	3	4	-3,8	1	67	-	Second-best anchor for SQ
R10	8	4	-3,8	1	67	2	Second-best anchor overall
R11	16	4	-2,8	2	67	-4	[…]
R12	25	4	-2,8	3	67	-10	Lowest anchor overall

Annex C (normative): Auditory Databases for Training and Validation of the model

C.1 General

This annex provides information about and references to the auditory tests, which were used to train the model (see clause 6.7.2).

C.2 Database for Handset Mode

C.2.1 Overview

Communication in noisy situations may be extremely stressful for the person located at the near-end side. Since the background noise is originated from the natural environment, it cannot be reduced for the listener. Thus, the only possibility to improve this scenario with support of digital signal processing is the insertion of speech enhancement algorithms in the downlink direction of terminals.

Some of these methods are already integrated in modern state-of-the-art mobile devices. Such algorithms target in general on the improvement of listening comfort on the near end. Methods like (artificial) BandWidth Extensions (BWE) or additional noise reduction are already quite common. Additionally, more sophisticated enhancement algorithms manipulate the speech signal with respect to the instantaneous local background noise estimation. The focus here is to improve speech intelligibility. Such methods are also known as speech reinforcement, intelligibility or Near-End Listening Enhancement (NELE).

To investigate the impact on intelligibility and quality, the combined auditory assessment of listening effort and speech quality according to clause 5 was applied on an artificially created, but realistic test corpus. In [i.12], this work was already presented in detail, thus only a brief summary is provided here.

C.2.2 Test Corpus

Figure C.1 illustrates the principle of the test corpus generation: the first stage was the acoustical noise recordings of the near-end listener. For that purpose, a mock-up device was mounted at right ear of head and torso simulator (HATS). With standard 8 N application force, a typical leakage was realized. The left ear remained uncovered for the binaural recording. A noise playback system according to ETSI TS 103 224 [i.4] with an 8-speaker-setup was then used to reproduce a realistic sound field around the HATS (left side of figure C.1). Four standardized handset noises according to the database of ETSI TS 103 224 [i.4] were evaluated:

- Inside Car Noise - Full-size car 130 km/h.
- Public Places Noise - Cafeteria.
- Outside Traffic Street Noise - Road.
- Public Places Noise - Train station.

Each recording was played back with the realistic level. Two additional gains +6 dB and -6 dB were applied to each scenario to obtain a wider range of noise levels. Finally, silence condition (idle noise < 30 dB_{SPL} (A)) was also taken into account.

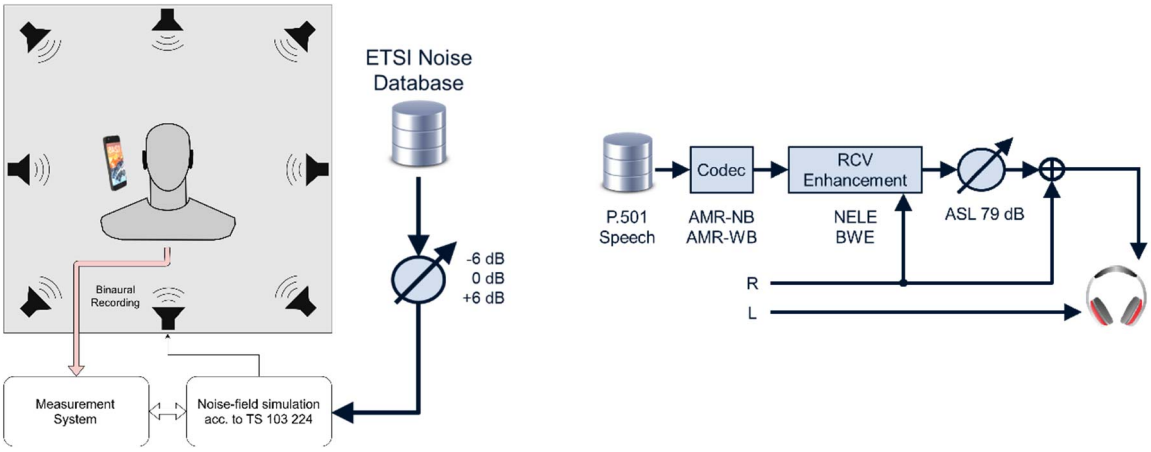

Figure C.1: Setup of binaural noise recording procedure (left) and generation of test corpus (right)

The right side of figure C.1 shows the flow chart of the processing chain. In a first processing step, the original German speech material according to Recommendation ITU-T P.501 [5] is pre-filtered and down-sampled to narrowband and wide-band. Then, encoding and decoding of the widely used Adaptive Multi-Rate codec (AMR/AMR-WB) is applied. If applicable, the right ear noisy-only signal is used as an additional input for the speech signal enhancement (here: NELE).

After this step, the active speech level is normalized to 79 dB_{SPL} according to Recommendation ITU-T P.56 [3]. Especially common NELE algorithms utilize the maximum possible and allowed speech level. Since the focus is purely on the perception impact of sound manipulation but not on level differences all possibly occurring level differences are equalized. The resulting signals are assumed as the output of a mobile phone without further degradations, i.e. neglecting non-linear speaker distortion or any arbitrary transfer function.

Overall, nine NELE algorithms (eight for WB, one for NB), two BWE methods, two combinations of both and coding with AMR and AMR-WB only were included per background noise/gain set. Finally, the signal of the right artificial ear is mixed with the processed speech. By combining this signal with the left ear signal of the unprocessed background noise, a binaural stimulus is created for the listening test.

C.2.3 Auditory Testing

One binaurally presented sample of 8,0 s duration included two sentences of one talker. Thus, four samples per condition are obtained. In overall, 197 conditions with 788 different samples were auditory evaluated with the test design described in clause 5. In the evaluation, 56 native German speakers participated. Each participant listened to one sample per condition, which lead to 56 votes per condition or 14 votes per sample (for listening effort and speech quality).

C.3 Database for ICC

C.3.1 Overview

The in-car listening situation is often impacted by a low signal-to-noise ratio (SNR), which leads to reduced speech intelligibility and higher listening effort, respectively. This applies in particular to the communication between driver and passengers. Several ICC systems have been recently introduced in the market, aiming to improve this situation as well as to decrease driver distraction.

In order to investigate the application of perceived listening effort for ICC systems, this clause presents a comprehensive auditory experiment. It is based on binaural recordings containing realistic background noise scenarios, speech, and reinforced speech. In [i.13], this work was already presented in detail, thus only a brief summary is provided here.

C.3.2 Simulation Environment

Impulse response measurements in the cabin of two different vehicles were conducted (one mid- and one full-size car). This results in two Devices Under Test (DUTs), which are regarded in this evaluation. The talker and listener setups are identical for all conditions, the driver talks to the listener sitting directly behind him.

In order to simulate the whole ICC system offline, impulse responses from the equalized artificial mouth to the input microphones of the system as well as to the listener's ears - diffuse-field equalized head and torso simulators (HATS) according to Recommendations ITU-T P.57 [6] and Recommendation ITU-T P.58 [7] - were measured with white noise signals. To simulate the effect of the ICC system, the impulse responses from the loudspeakers to the input microphones of the system as well as to the listener's ears were determined in a similar way. Driving noise was recorded synchronously at the ICC microphones and the listener's ears in both DUTs. The structure of the simulation environment that was used to obtain simulated binaural ear signals is shown on the left in figure C.2.

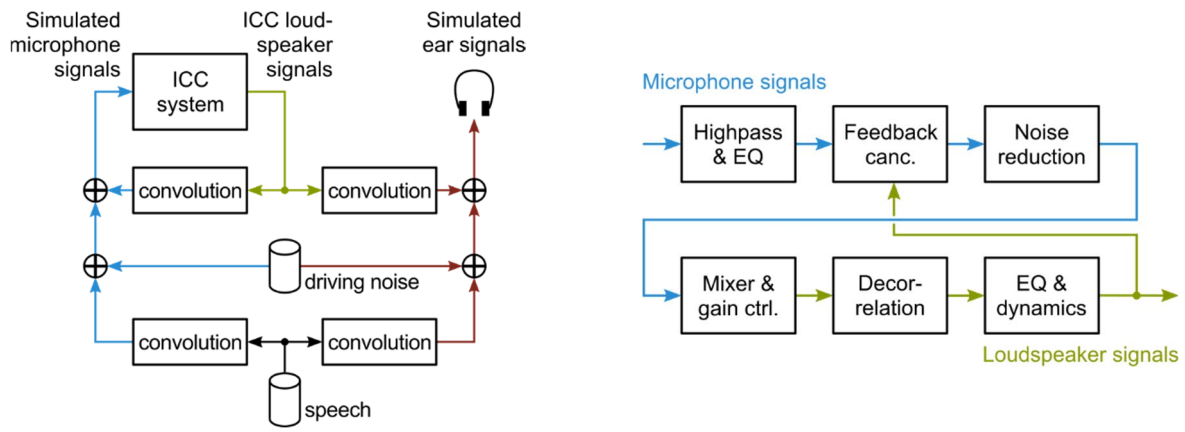

Figure C.2: Structure of the simulation environment (left) and simplified structure of the ICC system (right)

A simplified structure of the ICC system is depicted on the right in figure C.2: The microphone signals are equalized and high-pass filtered to get rid of frequencies below the usual speech spectrum. NLMS-based feedback and echo cancellation is used to get rid of feedback and echoes from the ICC loudspeakers into the microphones. A mixer module distributes the noise-reduced signals from the talkers to the listening passengers, but also calculates and applies an appropriate gain for the present noise scenario. The loudspeaker signals are de-correlated using pitch-shifting, equalized, and their dynamic range is compressed.

The following modes of the simulated ICC system were used for the evaluation:

- ICC Off: the system is deactivated and no reinforcement is applied. This scenario is regarded as the baseline for all other settings.
- Default: the system is tuned for typical execution in the corresponding vehicle cabin in an assumed optimum/balanced setting.
- High Gain: the configuration is similar to the Default mode, but with additional output gain.
- Extra Delay 15: same as Default mode, but processing delay of the system is artificially increased by 15 ms.
- Extra Delay 25: same as Default mode, but processing delay of the system is artificially increased by 25 ms.

The ICC system in Default mode obtains a delay ΔR_x (difference between direct sound and reinforced speech) of about 5,5 ms.

C.3.3 Speech and Noise Levels

The German speech material according to ETSI TS 103 281 [4] was used for the simulation, which includes two sentences of four male and four female talkers. The speech sequence was used as a source for the simulation, representing a playback via the artificial mouth of the HATS with an Active Speech Level (ASL) according to Recommendation ITU-T P.56 [3] of -4,7 dB_{Pa} In addition, custom Lombard gains were added to each condition. Recent studies [i.14] show that the Lombard effect and its aspects are influenced by noise level, seat position, as well as by the ICC reinforcement level. The gains were manually and subjectively tuned in order to provide reasonable minimum speech levels for each noise condition.

With these figures, also the ASL of the direct path sound (without any reinforcement, but including Lombard gain) can be determined, the resulting values are shown in the upper part of table C.1. For each DUT, two driving noises (medium and maximum speed) were binaurally recorded at the listener's position with diffuse-field equalization. The lower part of table C.1 shows the averaged levels (left and right ear) of the background noises.

Table C.1: Levels of driving noise and speech

Level of	Noise	DUT 1	DUT 2
Speech [dB_{SPL}]	Silence	71	72
	Medium	72	74
	Maximum	74	76
Noise [dB_{SPL}(A)]	Silence	< 30	< 30
	Medium	68	75
	Maximum	74	79

The following parameters of the system were chosen for the auditory evaluation:

- Two DUTs/simulated car cabins.
- Five ICC modes.
- Three background noise scenarios (including silence).

In total, 2×5×3 = 30 test conditions were obtained by this segmentation.

C.3.4 Auditory Testing

The combined auditory assessment of listening effort and speech quality according to clause 5 was conducted in this study, including the reference conditions as defined in clause C.4.

A total of 48 naïve German test subjects participated in the auditory test, which contained 672 samples (42 conditions, 16 sentences each). Each subject listened to four blocks of 42 randomized samples (including one sample per condition). In total, 12 votes per sample and 192 votes per condition were obtained by this distribution. The stimuli were presented via diffuse-field equalized headphone playback.

C.4 Training and Validation

For the training of the model, the two databases were randomly split into a training and a validation part according table C.2. Only test conditions are considered here (reference conditions used neither for training nor validation).

Table C.2: Levels of driving noise and speech

	Training	Validation
Database Handset	85 % (167 conditions, 668 samples)	15 % (30 conditions, 120 samples)
Database ICC	50 % (15 conditions, 240 samples)	50 % (15 conditions, 240 samples)

History

Document history		
V1.1.1	November 2019	Publication