RCS

(an analysis)

Nagaraja (Nag) Rao; Boca Raton, FL

 © Nokia 2022

NOKIA

Drawn by N. Rao

Topology Views

 © Nokia 2022

NOKIA

Drawn by N. Rao

RCS Server in CSP domain - a topology view

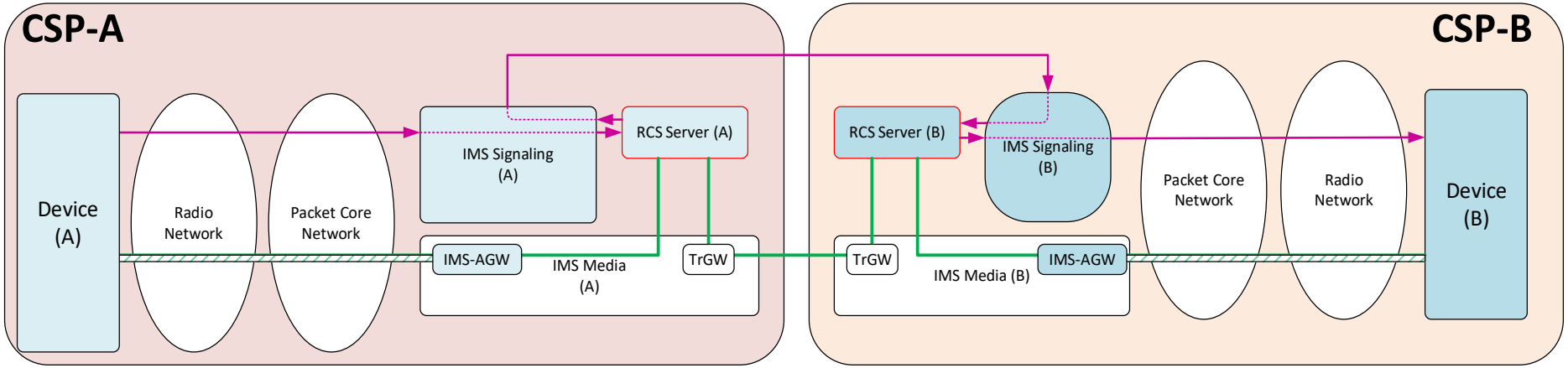

 © Nokia 2022

NOKIA

Drawn by N. Rao

RCS Server third party - a topology view

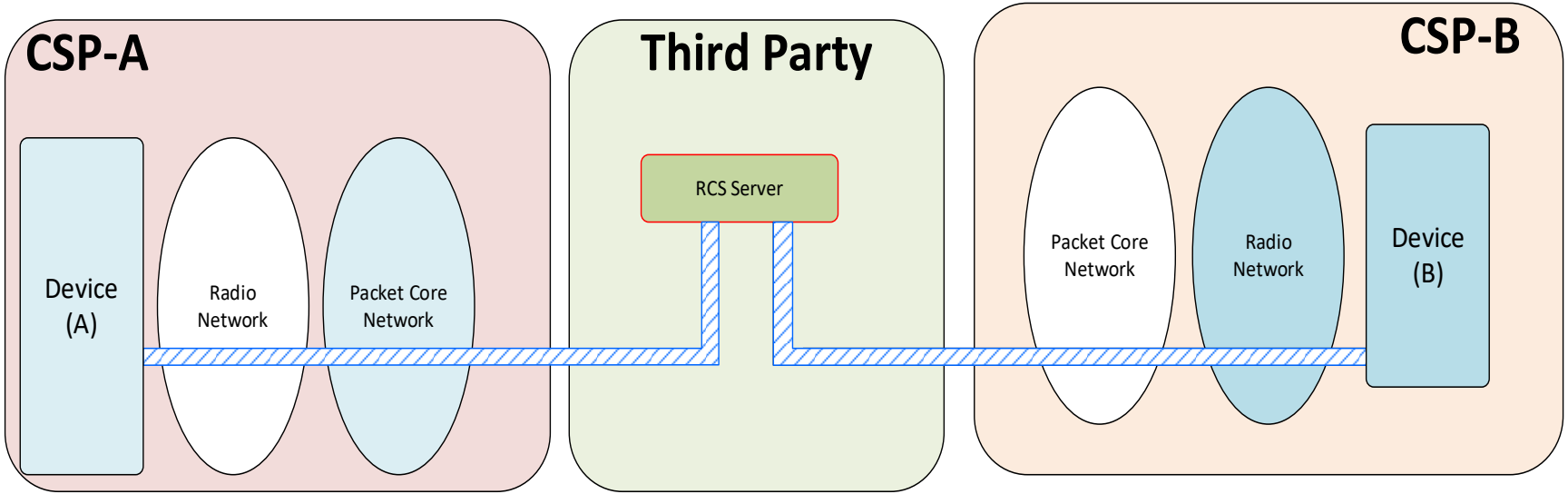

 © Nokia 2022

NOKIA

Drawn by N. Rao

RCS File Transfer – No File Localization Server in the terminating domain

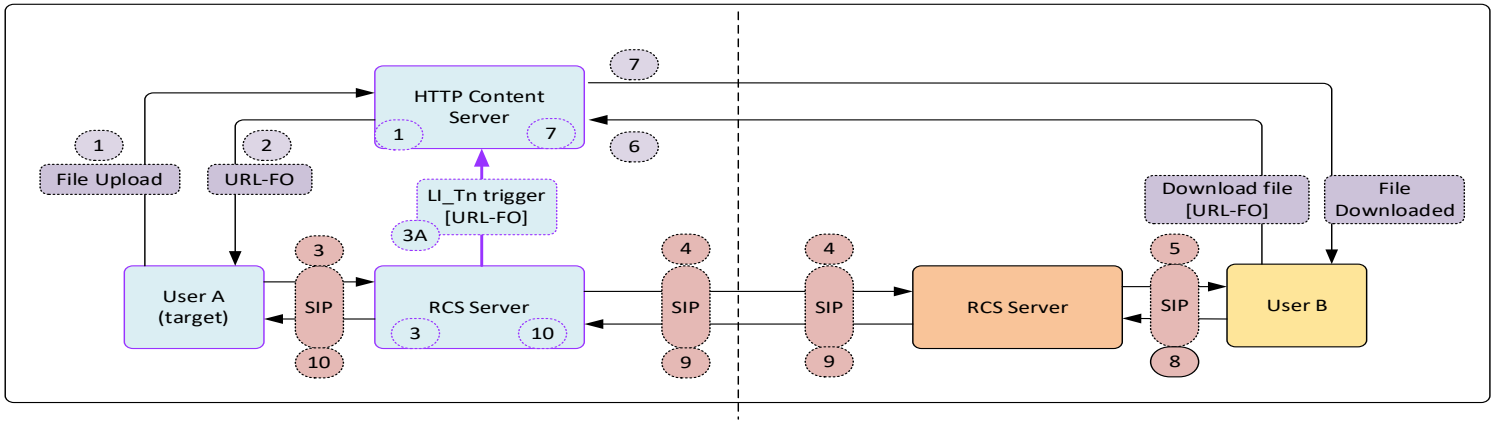

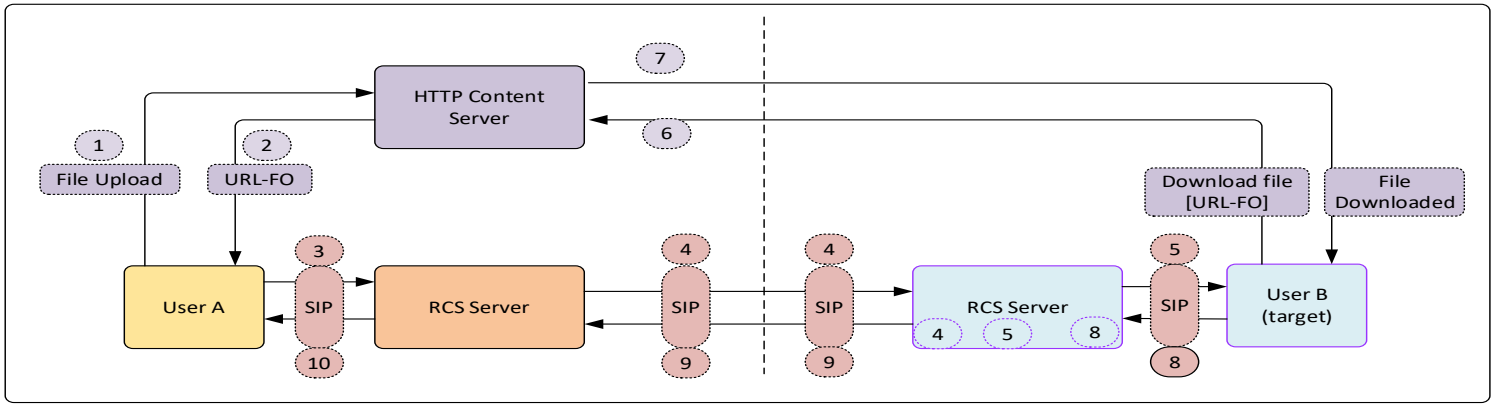

 © Nokia 2022

NOKIA

Drawn by N. Rao

RCS File Transfer –File Localization Server in the terminating domain

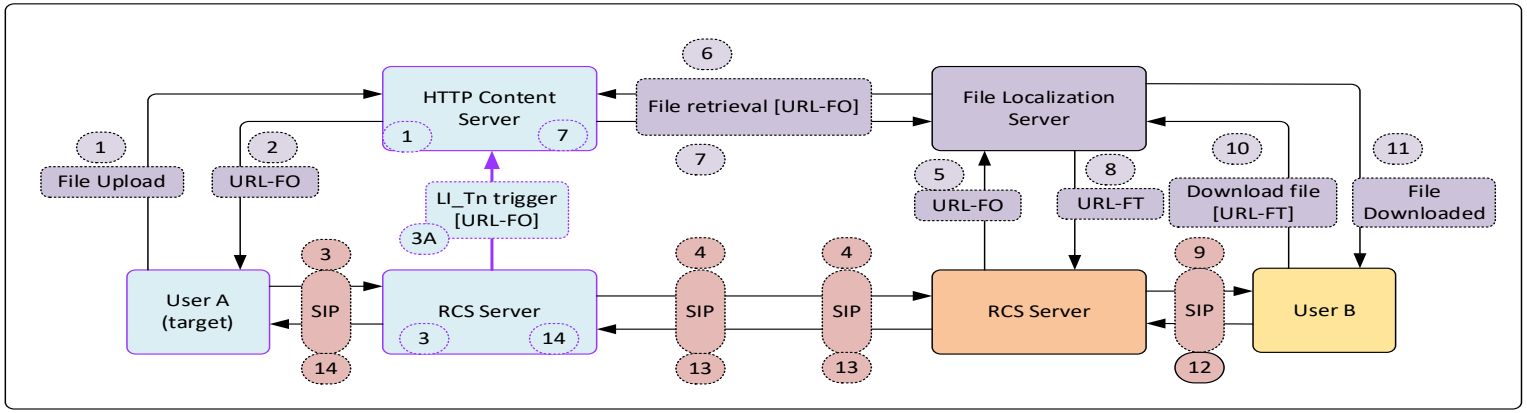

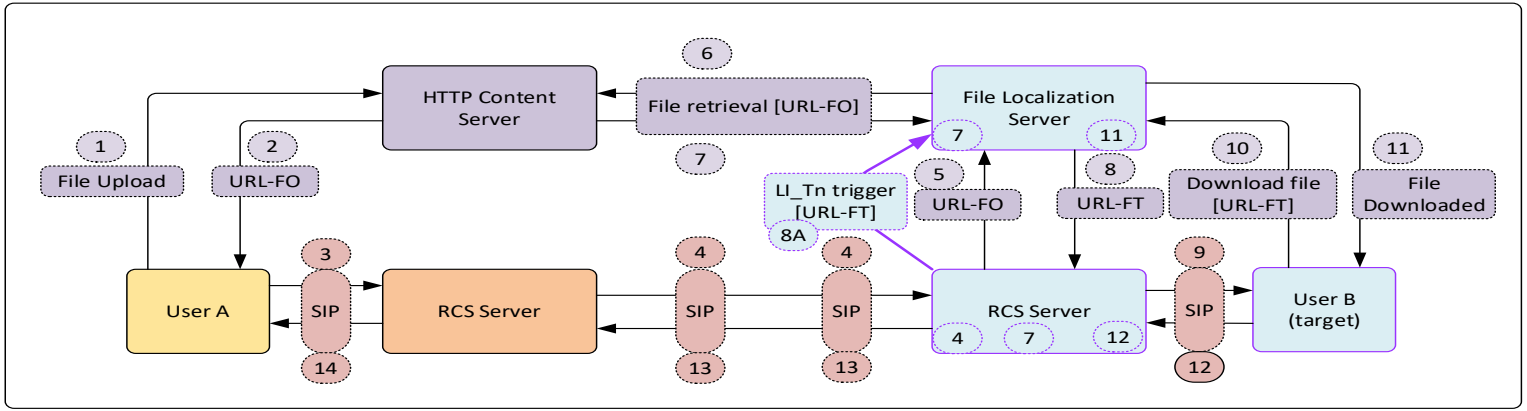

 © Nokia 2022

NOKIA

Drawn by N. Rao

Flow Views

 © Nokia 2022

NOKIA

Drawn by N. Rao

Flow: Originating end (RCS reference: RCC070-V11.0)

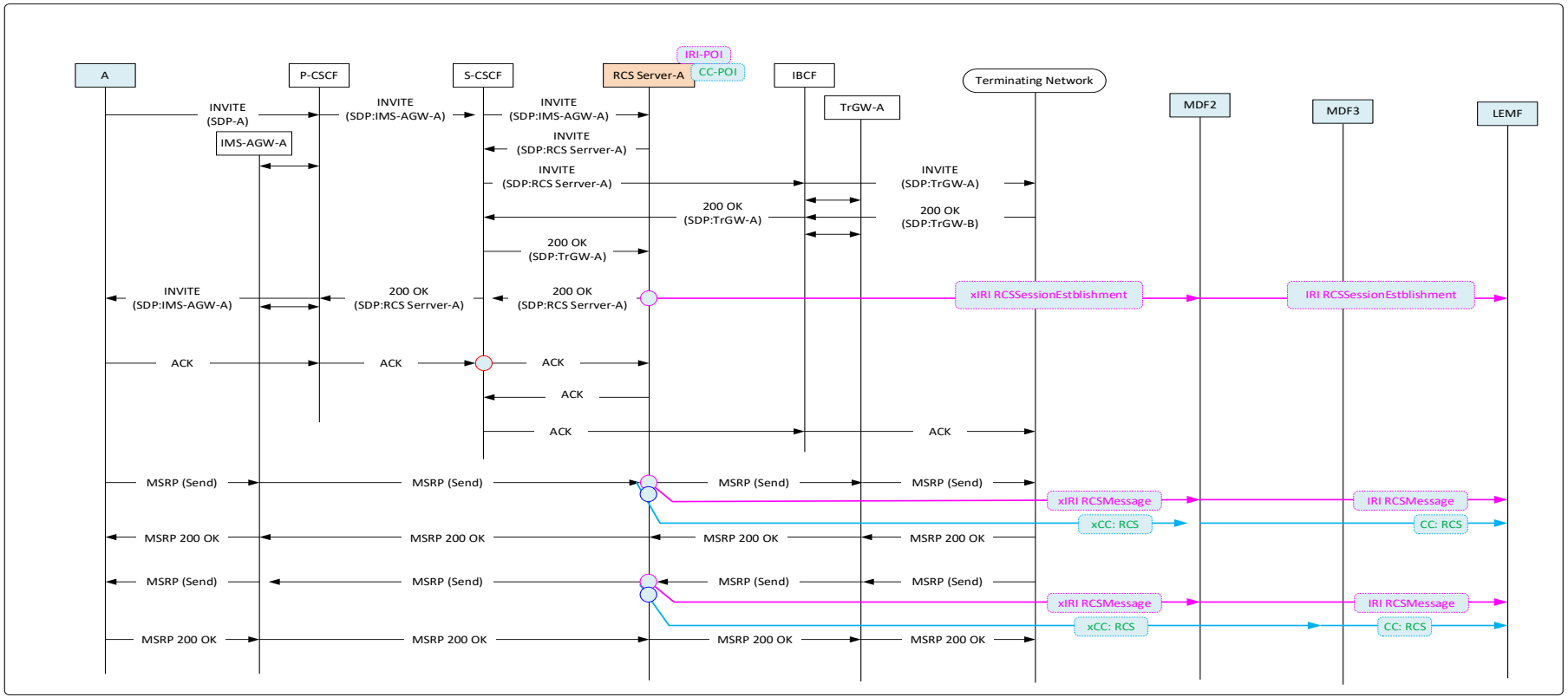

 © Nokia 2022

NOKIA

Drawn by N. Rao

Flow: terminating end (RCS reference: RCC070-V11.0)

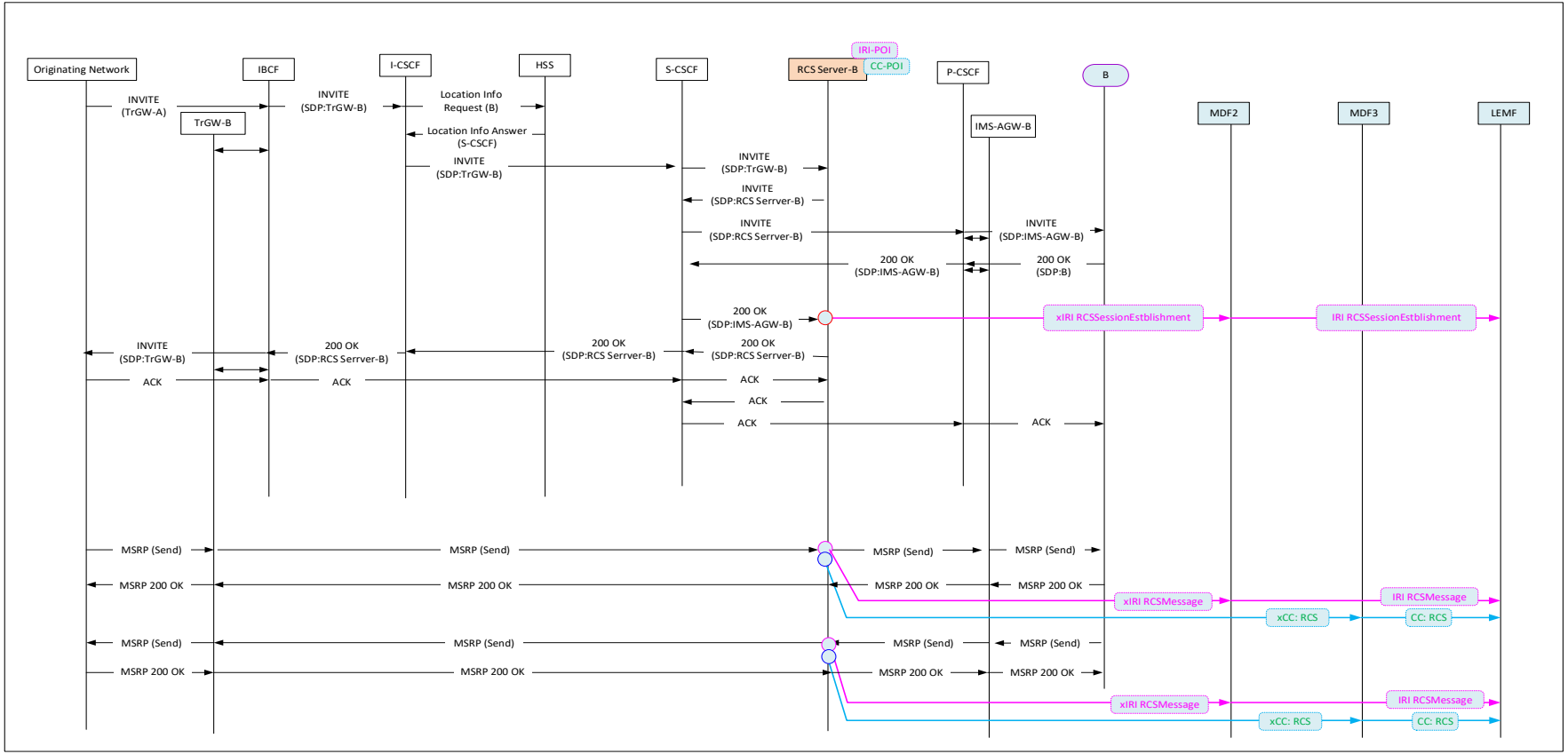

 © Nokia 2022

NOKIA

Drawn by N. Rao

Flow: terminating end store (RCS reference: RCC07-v11.0, figure 23)

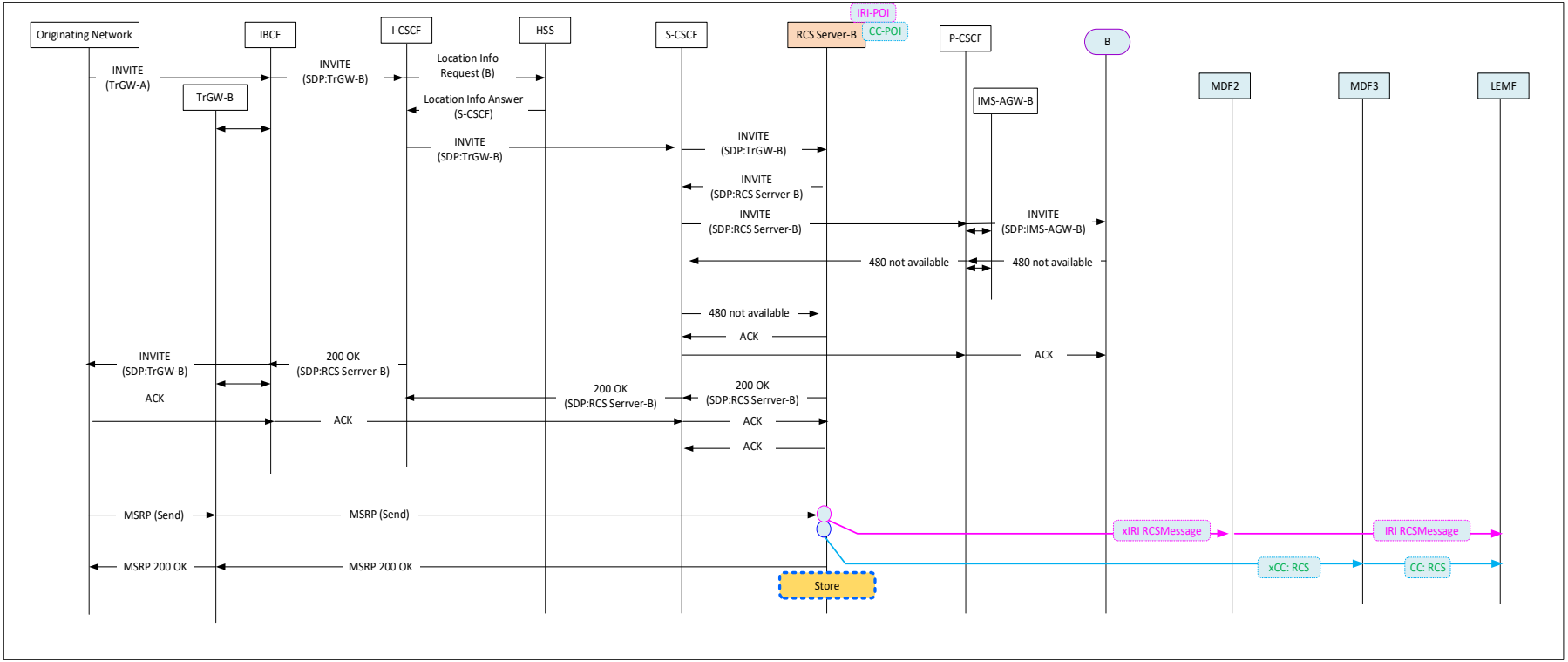

 © Nokia 2022

NOKIA

Drawn by N. Rao

Flow: terminating end deferred delivery (RCS reference: RCC07-v11.0, figure 24)

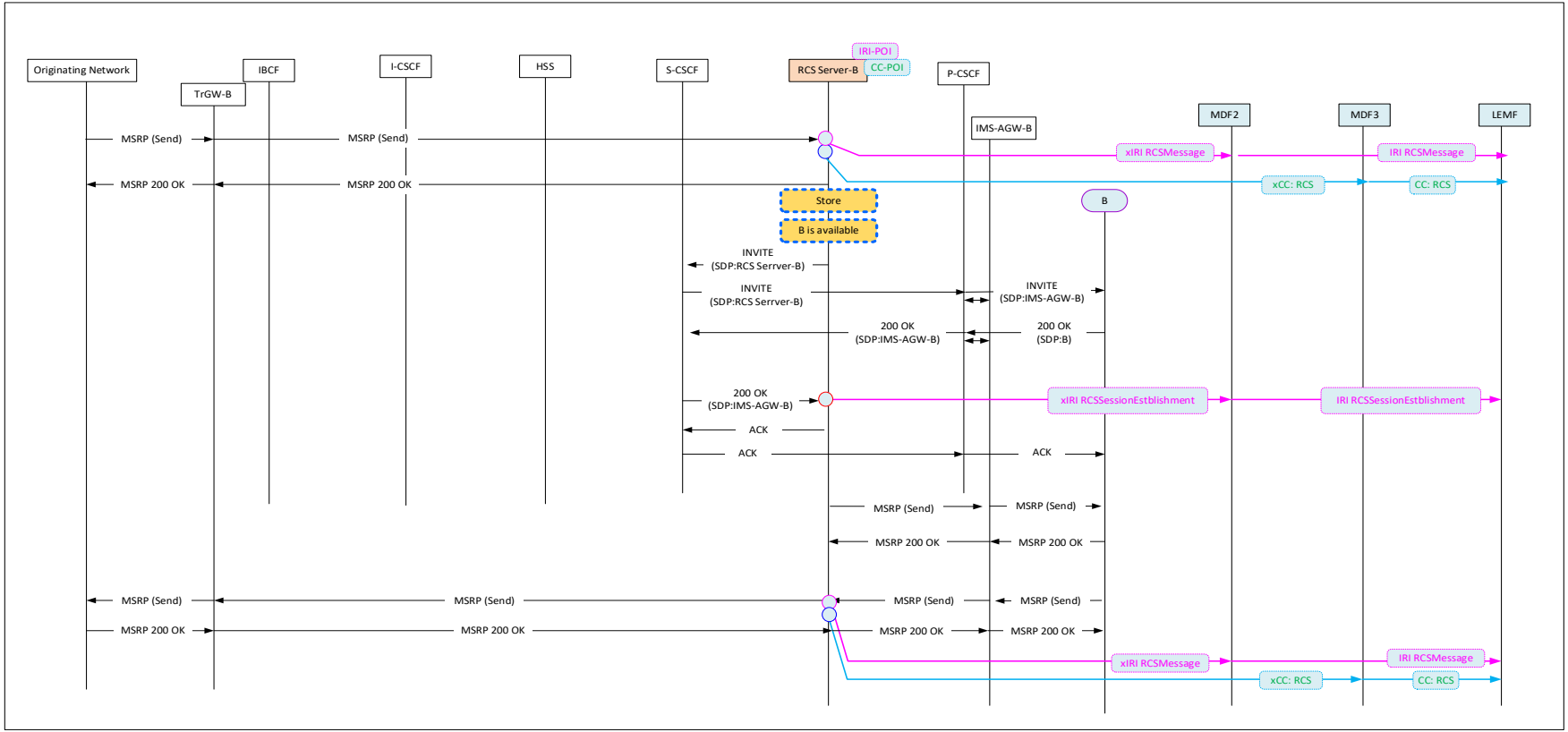

 © Nokia 2022

NOKIA

Drawn by N. Rao

Flow: Terminating end - deferred delivery, No MSRP session to A (RCS reference: RCC07-v11.0, figure 25)

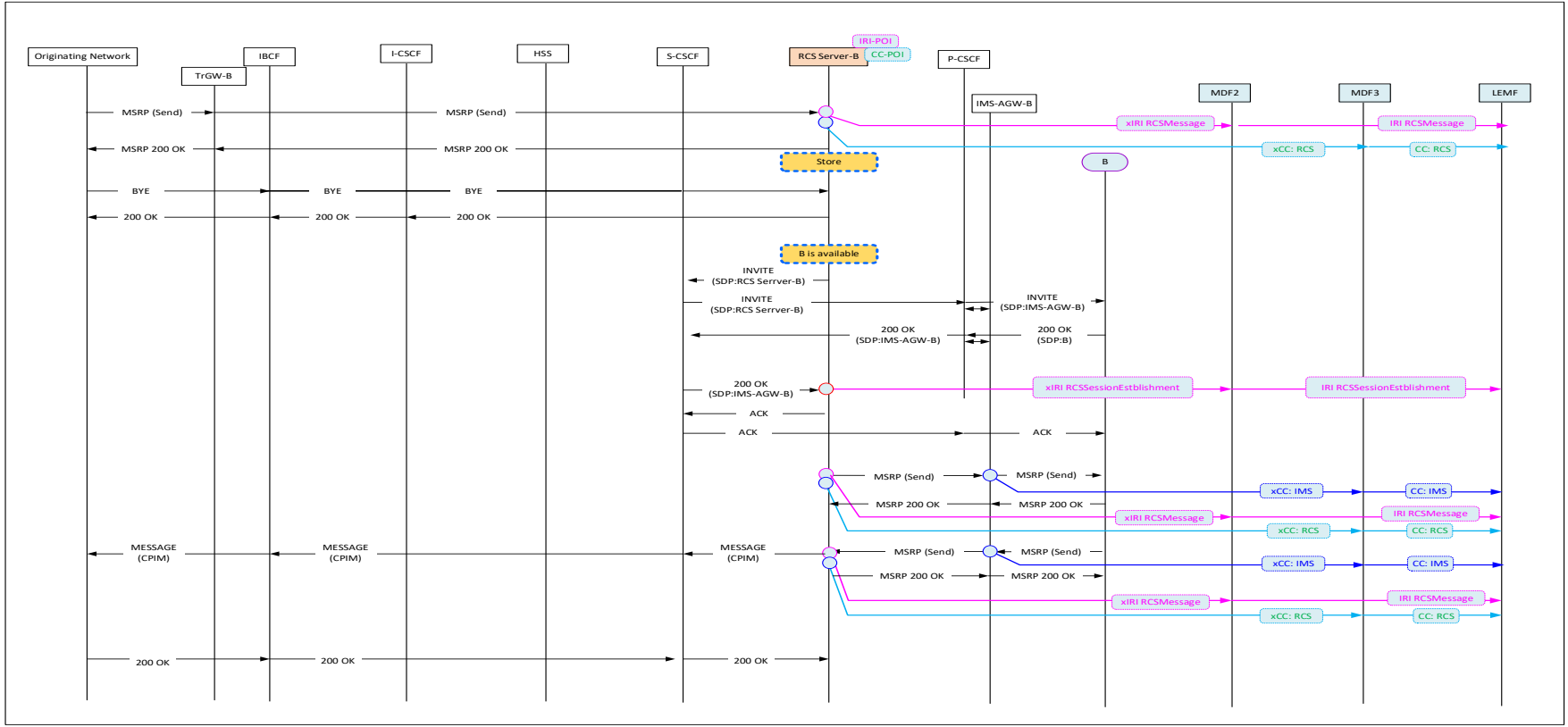

 © Nokia 2022

NOKIA

Drawn by N. Rao

Flow: Originating end store, deferred notification (Reference: RCC07-v11.0, figure 26 and 27)

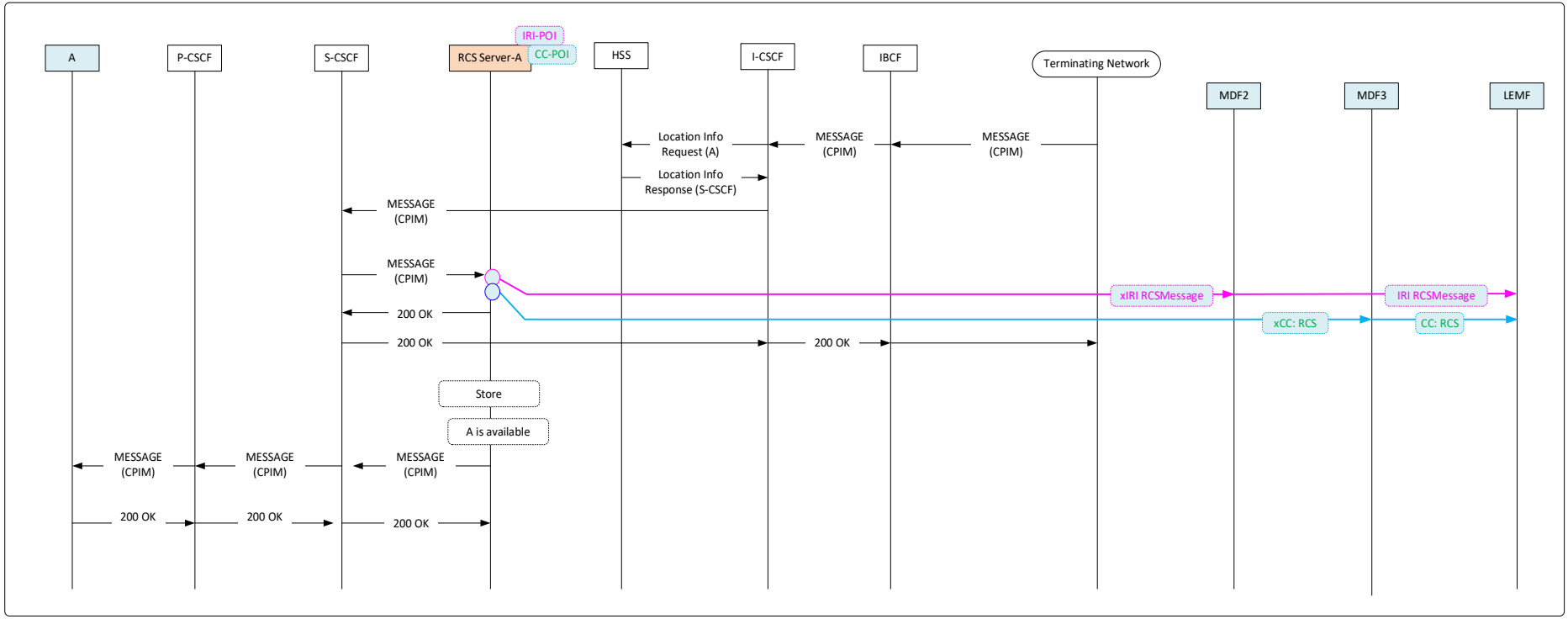

 © Nokia 2022

NOKIA

Drawn by N. Rao

Flow: terminating end as SMS over IP (RCS reference: RCC070-V11.0, Figure 28 & OMA CPM Interworking)

coming soon

 © Nokia 2022

NOKIA

Drawn by N. Rao

Flow: terminating end as SMS over NAS (RCS reference: RCC070-V11.0, Figure 28 & OMA CPM Interworking)

coming soon

 © Nokia 2022

NOKIA

Drawn by N. Rao

Flow: originating end (RCS reference: RCC070-V11.0, Figure 28 & OMA CPM Interworking)

coming soon

 © Nokia 2022

NOKIA

Drawn by N. Rao

Flow: Originating end – File Upload

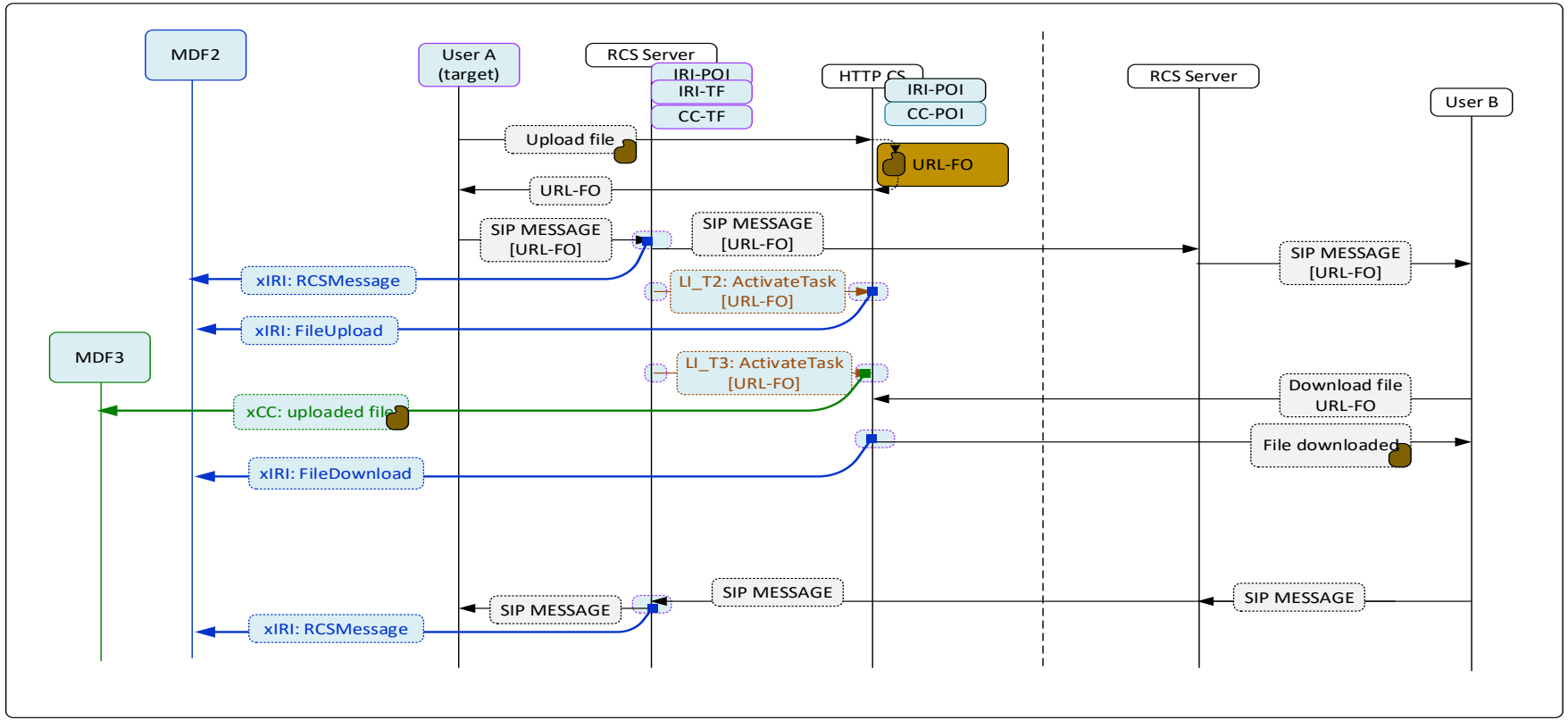

 © Nokia 2022

NOKIA

Drawn by N. Rao

Flow: Terminating end – File Upload

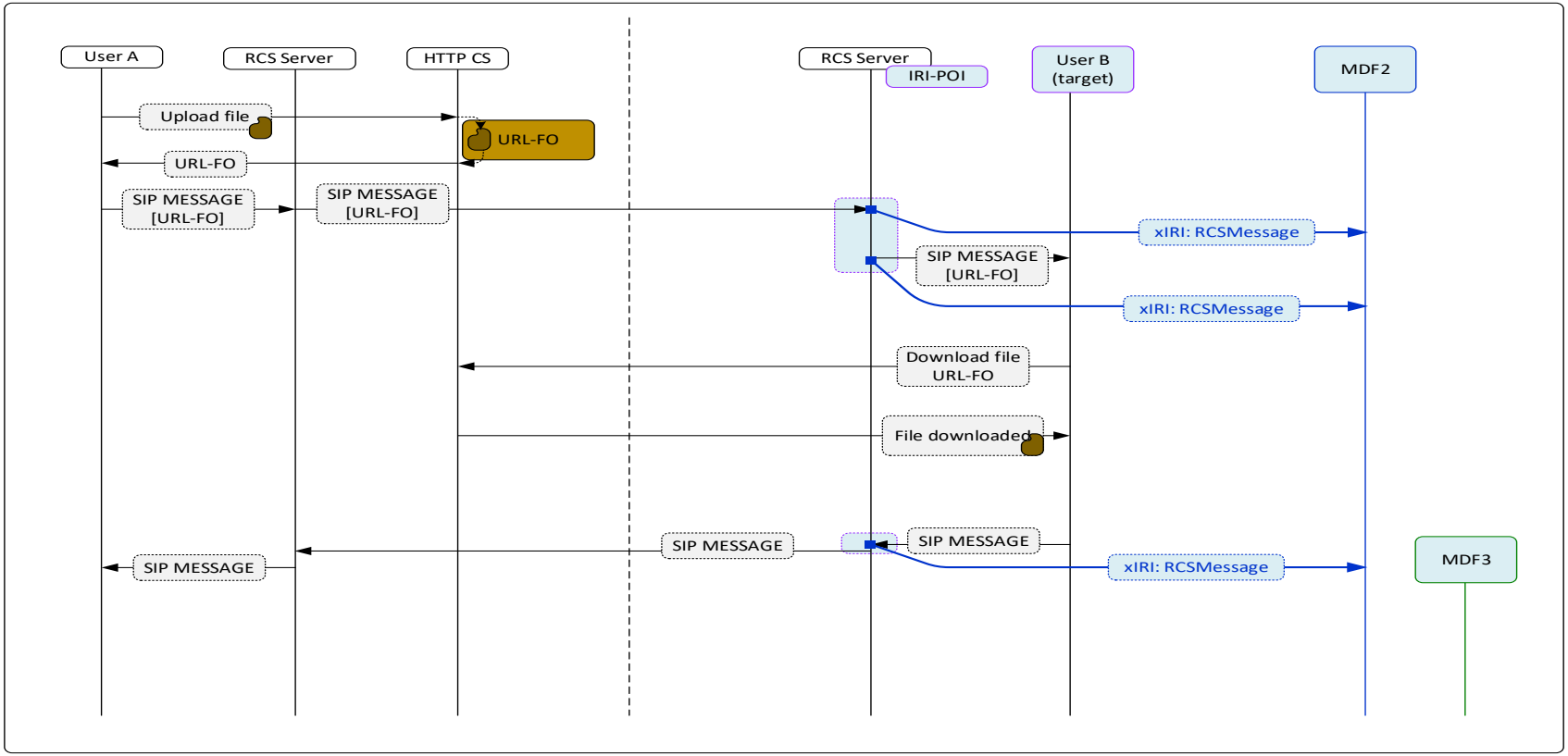

 © Nokia 2022

NOKIA

Drawn by N. Rao

Flow: Originating end – File Upload – terminating end has a File Localization Server

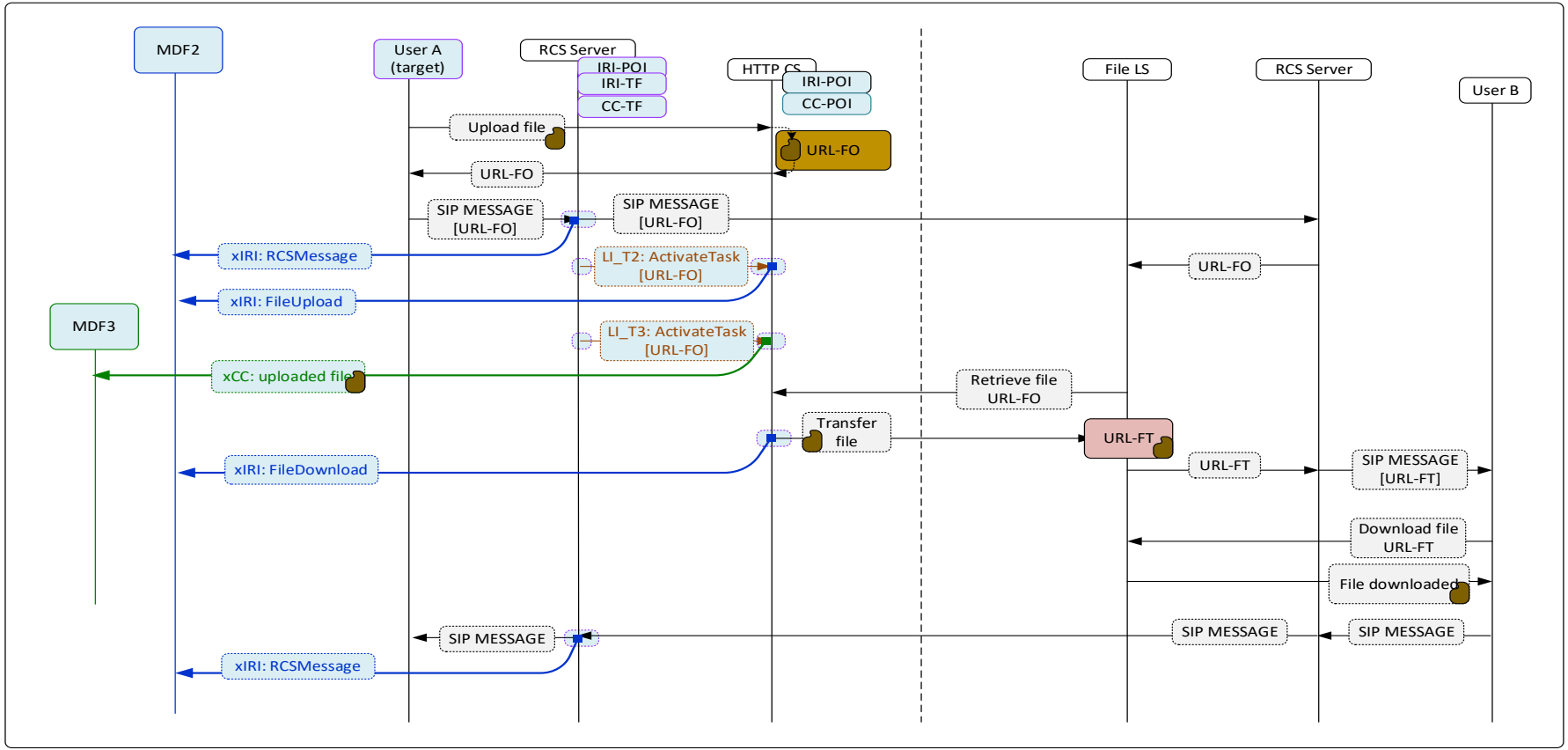

 © Nokia 2022

NOKIA

Drawn by N. Rao

Flow: Terminating end – File Upload – terminating end has a File Localization Server

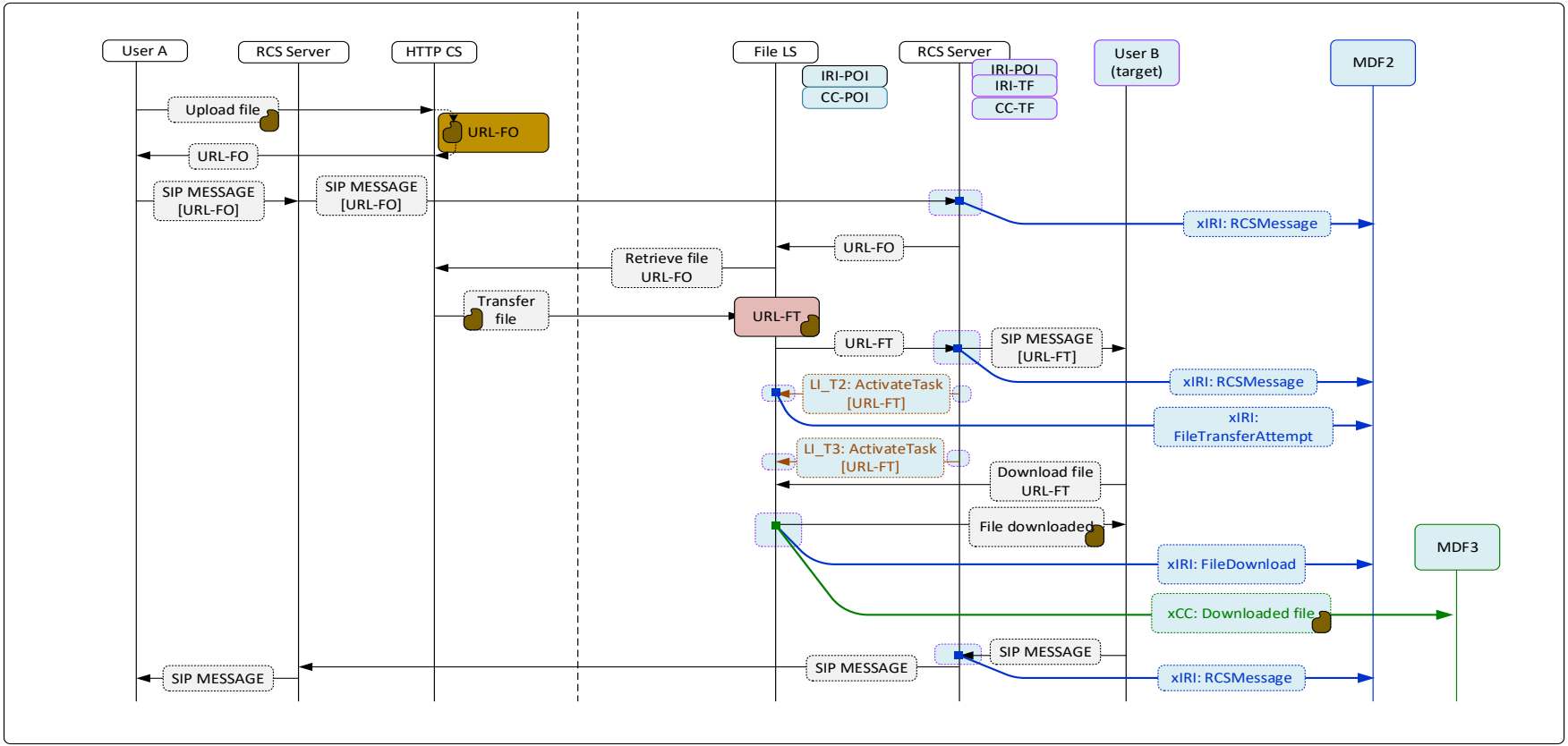

 © Nokia 2022

NOKIA

Drawn by N. Rao

Summary

- No IMS LI other than the xIRI IMSREGISTRTION.
- POI in RCS Server sends the xIRI RCSSessionEstablishment message when 200 OK is sent to, or received from, the target for MSRP session establishment.
- POI in RCS Server sends the xIRI RCSMessage when an incoming message is stored.
- POI in RCS Server does not generate the xIRI RCSMessage when the stored message is delivered to the target.
- When the MSRP message is delivered to the target as an SMS message, POI server sends the xIRI RCSMessage when the RCS server sends the submit_sm to the SM-SC.
- POI in SMS node (S-CSCF, SMSF) sends the xIRI IMSMessage as per the SMS LI.

 © Nokia 2022

NOKIA

Drawn by N. Rao

Deleted

 © Nokia 2022

NOKIA

Drawn by N. Rao

RCS File Transfer

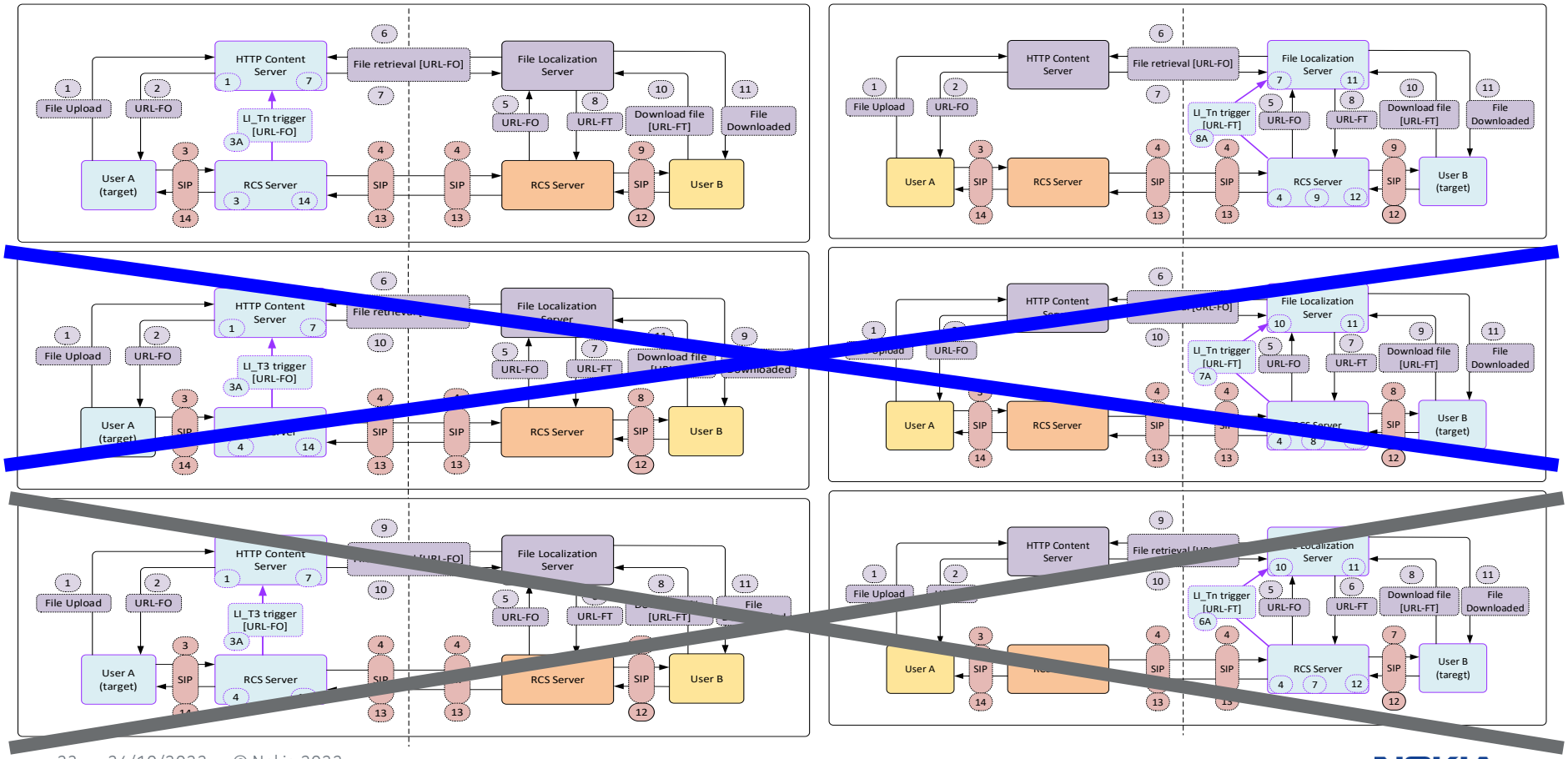

 © Nokia 2022

NOKIA

Drawn by N. Rao

RCS File Transfer

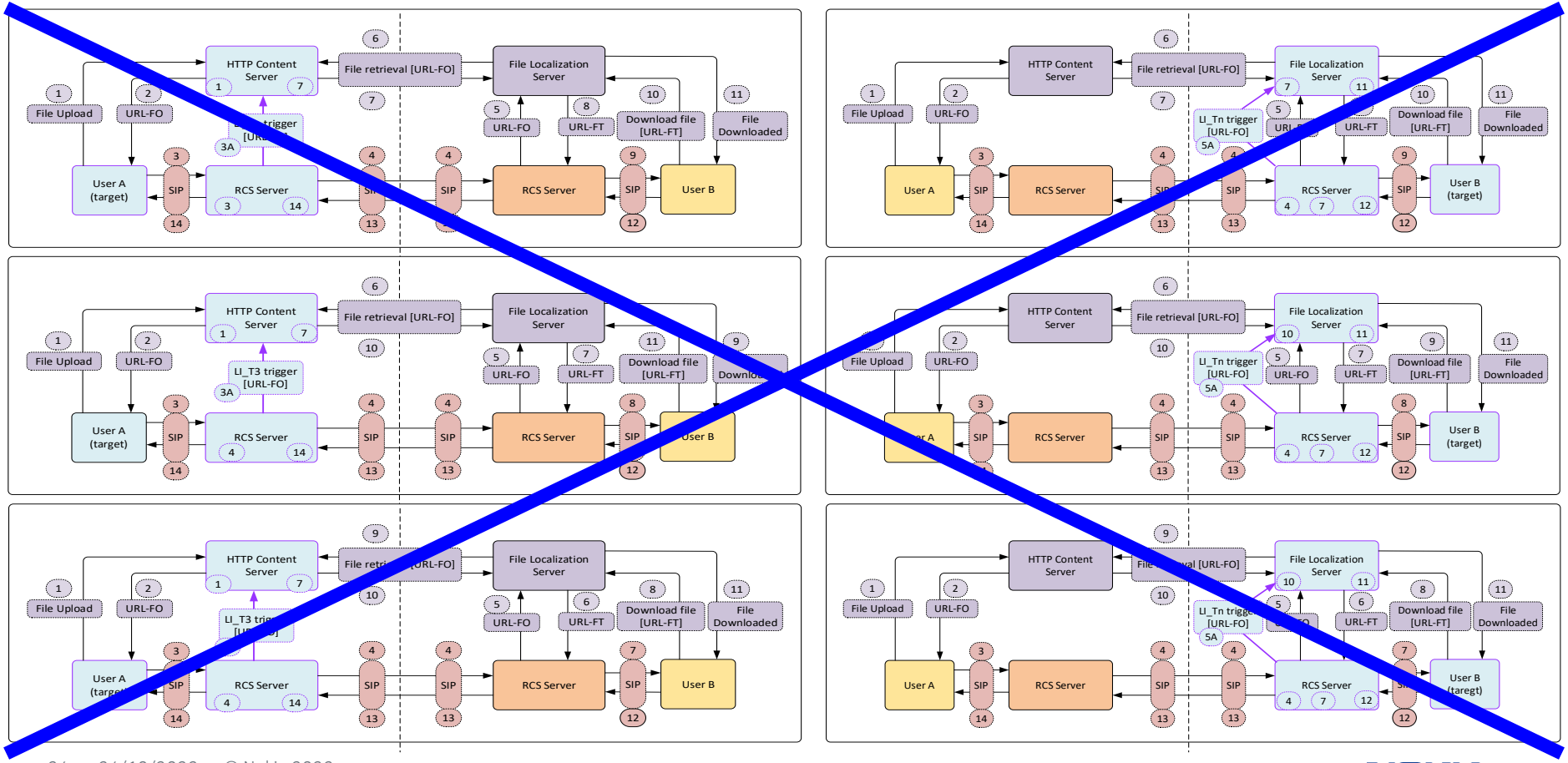

 © Nokia 2022

NOKIA

Drawn by N. Rao

RCS File Transfer

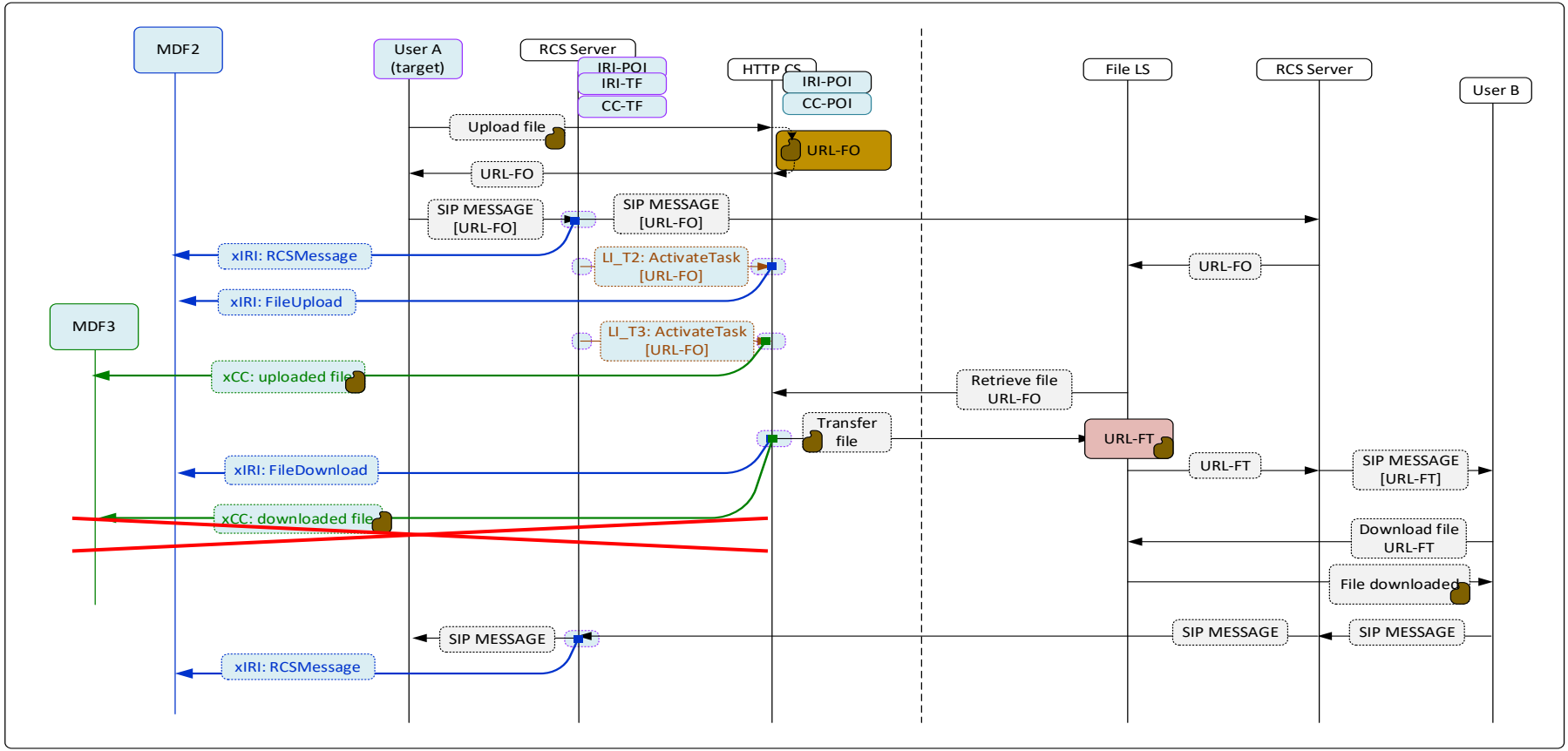

 © Nokia 2022

NOKIA

Drawn by N. Rao

NOKIA

 © Nokia 2022

Drawn by N. Rao