Dissecting the TS 23.501 Scenarios for LI

Nagaraja (Nag) Rao

 © Nokia 2018

NOKIA

Drawn by N. Rao

Overview of scenarios illustrated in TS 23.501

1. Non-roaming scenarios: TS 23.501 has three scenarios:
   - Single PDU session with one or more DN connections, multiple PDU sessions.
2. Roaming Scenarios: TS 23.501 has two scenarios:
   - Local Breakout (LBO) and Home Routed (HR)).
3. Non-3GPP access: TS 23.501 has 6 scenarios:
   - Variations of PLMN that have 5GS with non-3GPP access.
4. Interworking with EPC: TS 23.501 has 3 scenarios:
   - Non-roaming, Roaming with LBO and Roaming with HR.
5. Interworking between 5GS via non-3GPP access and EPC: TS 23.501 has 3 scenarios
   - Non-roaming, Roaming with LBO and Roaming with HR.
6. Interworking between ePDG/EPC and 5GS: TS 23.501 has 3 scenarios
   - Non-roaming, Roaming with LBO and Roaming HR.

 © Nokia 2018

NOKIA

Drawn by N. Rao

Non-roaming scenarios

© 2018 Nokia

TS 23.501 figure 4.2.3-2: Non-roaming scenario

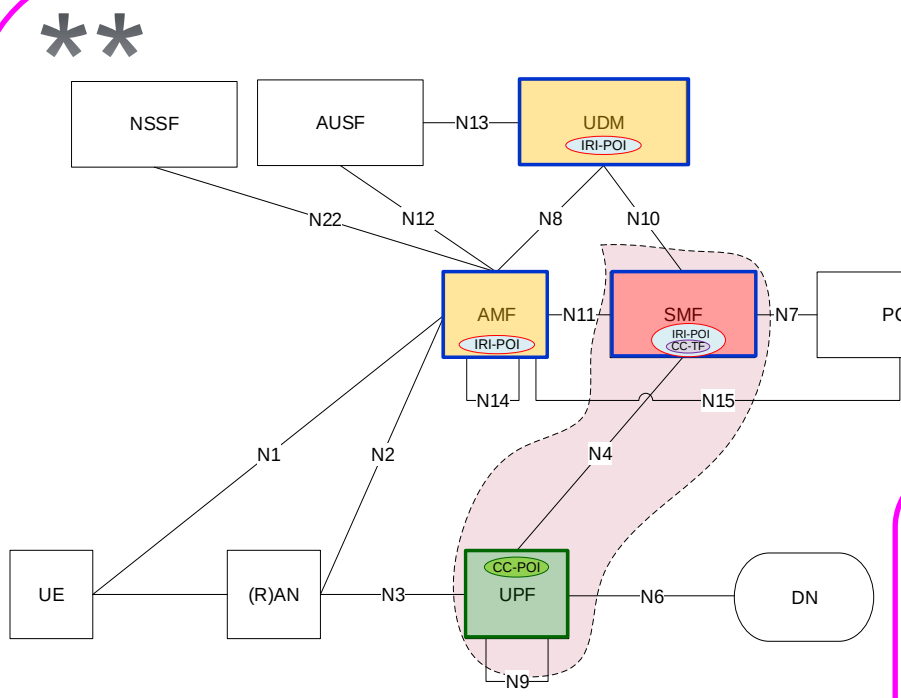

- Directly provisioned IRI-POI:
  - AMF
  - UDM
  - SMF
- Triggered CC-POI:
  - UPF
- CC-TF:
  - SMF

- <u>Packet detection and forwarding rules (LI_T3):</u>
  - Generate and deliver xCC from user plane packets received over N3, N6 (and N9) to MDF3.
  - Or, generate and deliver xCC from the user plane packets received, and sent over, N3 to MDF3

 © Nokia 2018

NOKIA

Drawn by N. Rao

TS 23.501 figure 4.2.3-3: Non-roaming scenario, multiple PDU sessions

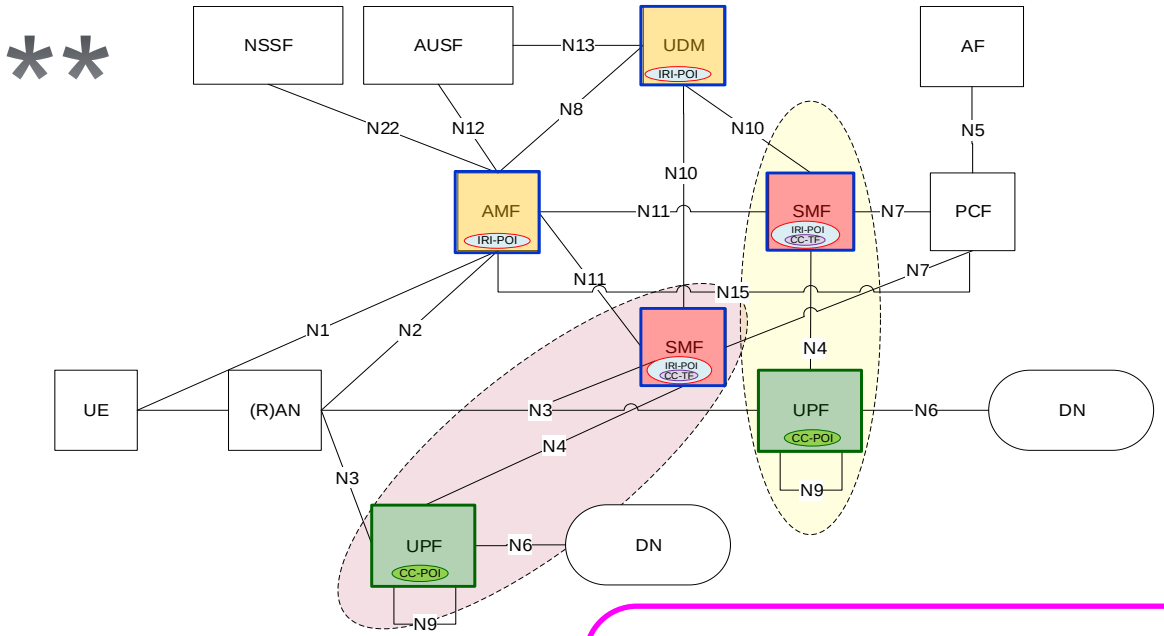

- Directly provisioned IRI-POI:
  - AMF
  - UDM
  - SMF (reddish) – session 1
  - SMF (yellowish) – session 2
- Triggered CC-POI:
  - UPF (reddish) – session 1
  - UPF (yellowish) – session 2
- CC-TF:
  - SMF (reddish) – session 1
  - SMF (yellowish) – session 2

- <u>Packet detection and forwarding rules (LI_T3):</u>
  - Generate and deliver xCC from user plane packets received over N3, N6 (and N9) to MDF3. (Or, received and sent over N3).

Two independent, but similar triggers.

 © Nokia 2018

NOKIA

Drawn by N. Rao

TS 23.501 figure 4.2.3-4: Non-roaming scenario, concurrent connections to multiple DNs in single PDU session – option 1

**

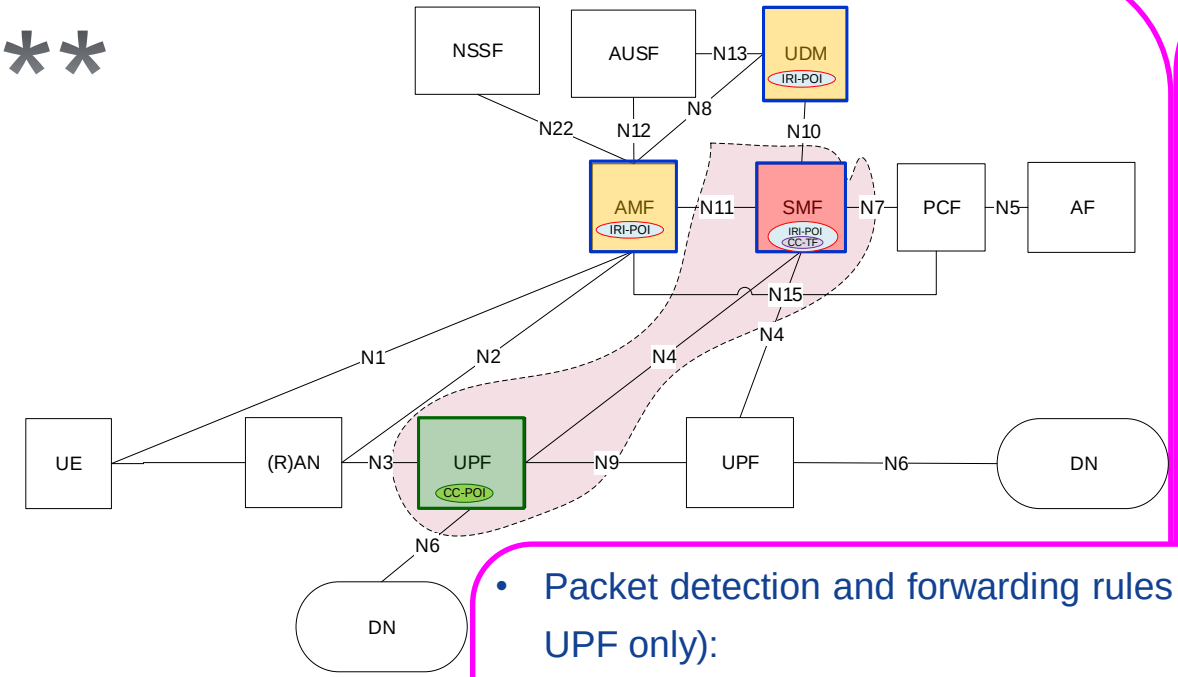

- Directly provisioned IRI-POI:
  - AMF
  - UDM
  - SMF
- Triggered CC-POI:
  - UPF (left one)
- CC-TF:
  - SMF

- Packet detection and forwarding rules (LI_T3) (Ingress UPF only):
  - Generate and deliver xCC from user plane packets received over N3, N6 and N9 to MDF3.
  - Or, generate and deliver xCC from the user plane packets received and sent over N3 to MDF3.

 © Nokia 2018

NOKIA

Drawn by N. Rao

TS 23.501 figure 4.2.3-4: Non-roaming scenario, concurrent connections to multiple DNs in single PDU session – option 2

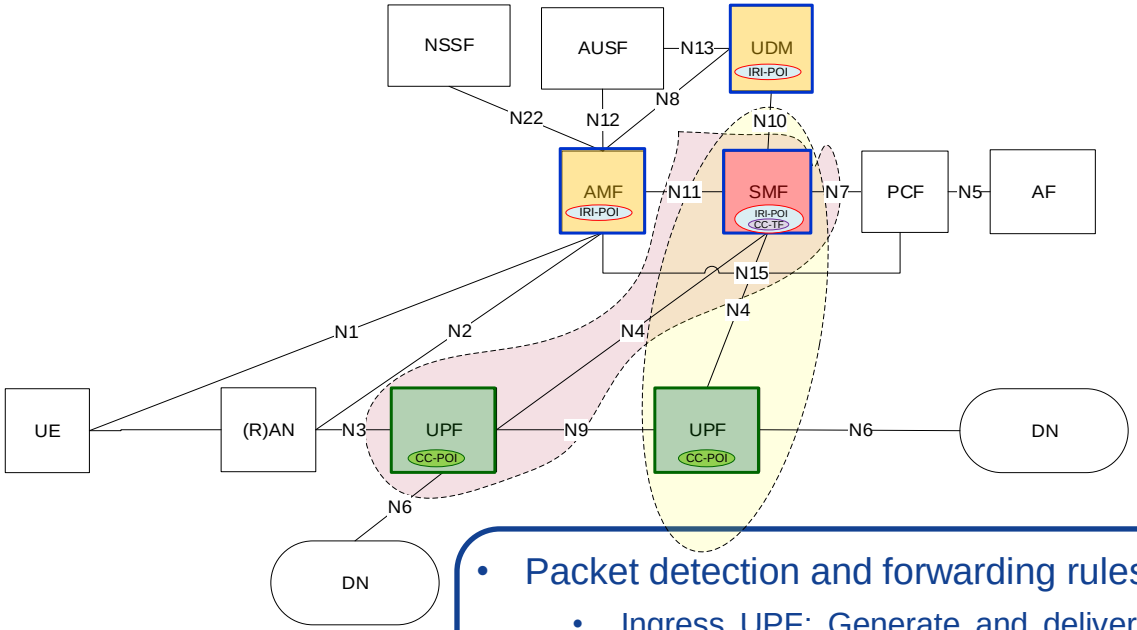

- Directly provisioned IRI-POI:
  - AMF
  - UDM
  - SMF
- Triggered CC-POI:
  - UPF (left one)
  - UPF (right one)
- CC-TF:
  - SMF

- Packet detection and forwarding rules (LI_T3):
  - Ingress UPF: Generate and deliver xCC from the user plane packets received and sent over 6.
  - Egress UPF: Generate and deliver xCC from the user plane packets received over N9.

 © Nokia 2018

NOKIA

Drawn by N. Rao

Roaming Scenarios

© 2018 Nokia

TS 23.501 figure 4.2.4-4: Roaming scenario with LBO, VPLMN

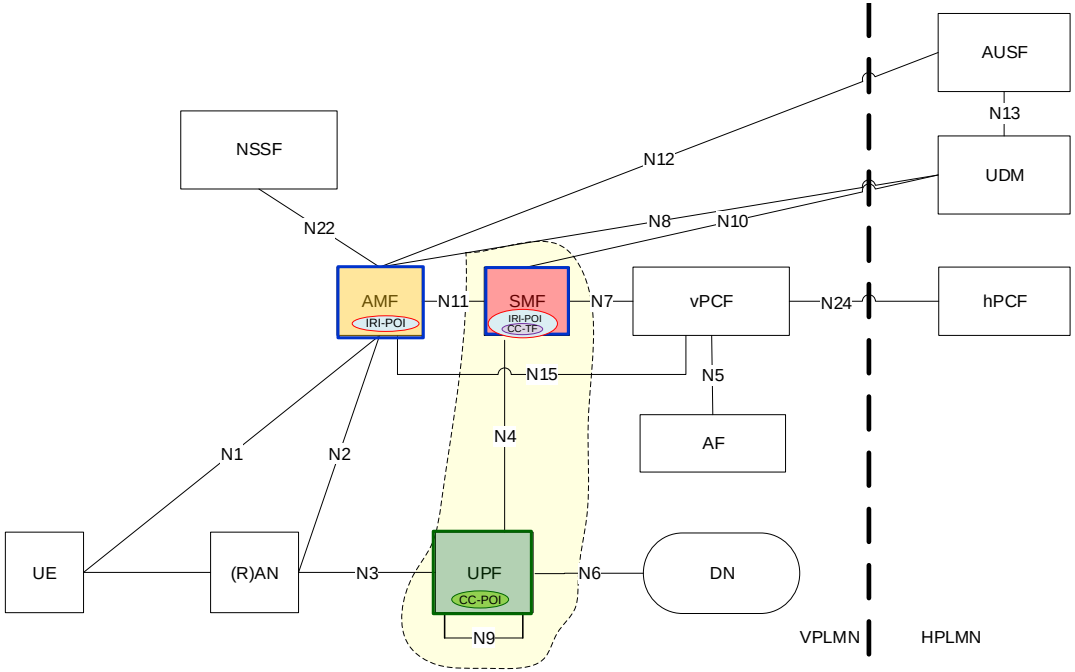

- Directly provisioned IRI-POI:
  - AMF
  - SMF
- Triggered CC-POI:
  - UPF
- CC-TF:
  - SMF

- Packet detection and forwarding rules (LI_T3):
  - Generate and deliver xCC from the user plane packets received over N3, N6 (and N9) to MDF3 (or received and sent over 3)

 © Nokia 2018

NOKIA

Drawn by N. Rao

TS 23.501 figure 4.2.4-4: Roaming scenario with LBO, HPLMN

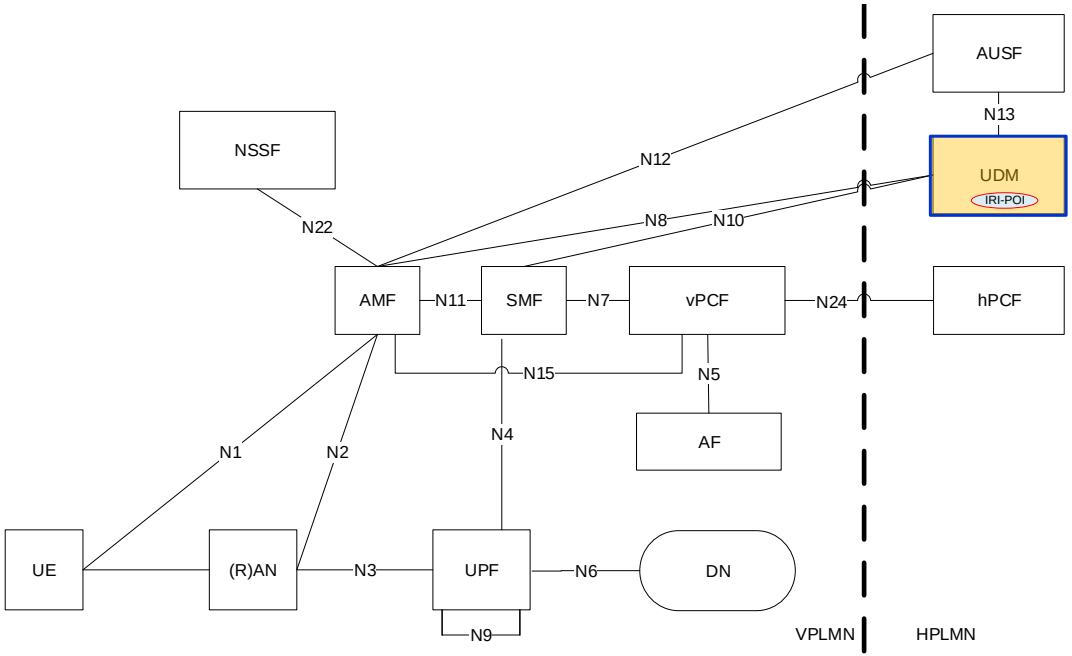

- Directly provisioned IRI-POI:
  - UDM

 © Nokia 2018

NOKIA

Drawn by N. Rao

TS 23.501 figure 4.2.4-6: Roaming scenario with HR, VPLMN

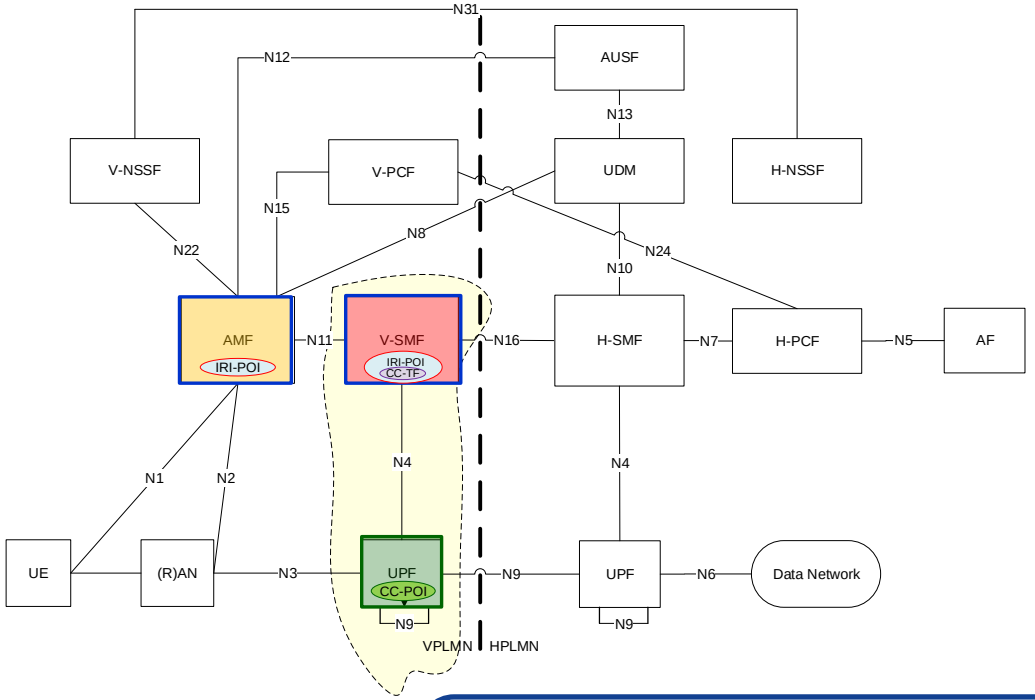

- Directly provisioned IRI-POI:
  - AMF
  - V-SMF
- Triggered CC-POI:
  - UPF
- CC-TF:
  - V-SMF

- Packet detection and forwarding rules (LI_T3):
  - Generate and deliver xCC from the user plane packets received over N3, N9 (and N9) to MDF3 (or received or sent over N3).

 © Nokia 2018

NOKIA

Drawn by N. Rao

TS 23.501 figure 4.2.4-6: Roaming scenario with HR, HPLMN

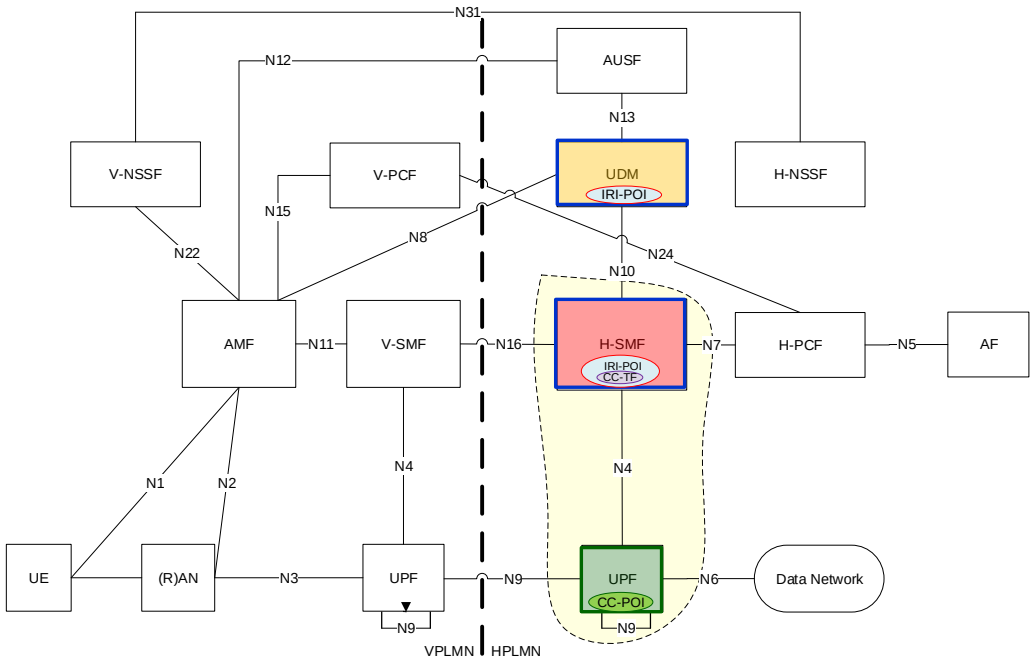

- Directly provisioned IRI-POI:
  - UDM
  - H-SMF
- Triggered CC-POI:
  - UPF
- CC-TF:
  - H-SMF

- Packet detection and forwarding rules (LI_T3):
  - Generate and deliver xCC from the user plane packets received over N9, N6 (and N9) to MDF3 (or received and sent over N3)

 © Nokia 2018

NOKIA

Drawn by N. Rao

Non-3GPP Access

 © 2018 Nokia

NOKIA

TS 23.501 figure 4.2.8.2.1-1: Non-roaming for 5GS with non-3GPP access

**

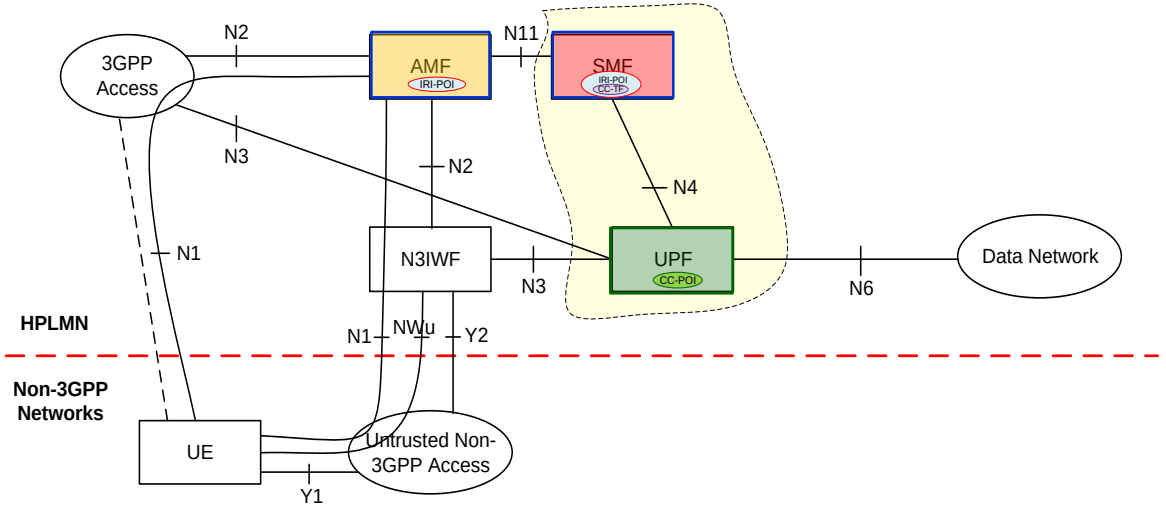

- Directly provisioned IRI-POI:
  - AMF
  - SMF
- Triggered CC-POI:
  - UPF
- CC-TF:
  - SMF

NOTE: AMF is always involved and user plane packets always go through an UPF.

- Packet detection and forwarding rules (LI_T3):
  - Generate and deliver xCC from the user plane packets received over N3 (3GPP), N3 (NWIWF) and N6 to MDF3 (received and over the N3 for each PDU session)

 © Nokia 2018

NOKIA

Drawn by N. Rao

TS 23.501 figure 4.2.8.2.2-1: LBO Roaming Architecture for Non-3GPP Accesses, N3IWF in same PLMN as 3GPP access

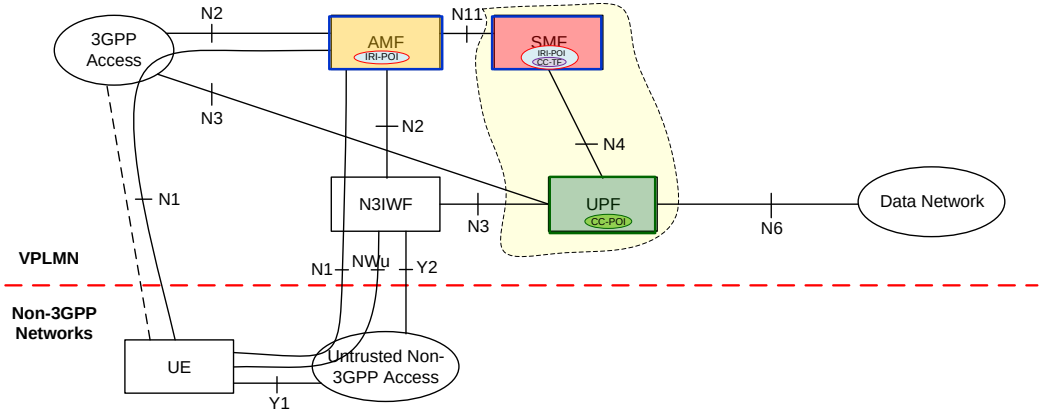

- Directly provisioned IRI-POI:
  - AMF
  - SMF
- Triggered CC-POI:
  - UPF
- CC-TF:
  - SMF

NOTE: AMF is always involved in VPLMN, and user plane packets always go through an UPF.

- Packet detection and forwarding rules (LI_T3):
  - Generate and deliver xCC from the user plane packets received over N3 (3GPP), N3 (NWIWF) and N6 to MDF3 (or received and sent over N3).

 © Nokia 2018

NOKIA

Drawn by N. Rao

TS 23.501 figure 4.2.8.2.3-1: HR Roaming architecture for 5GS with non-3GPP access - N3IWF in the same VPLMN as 3GPP access - VPLMN

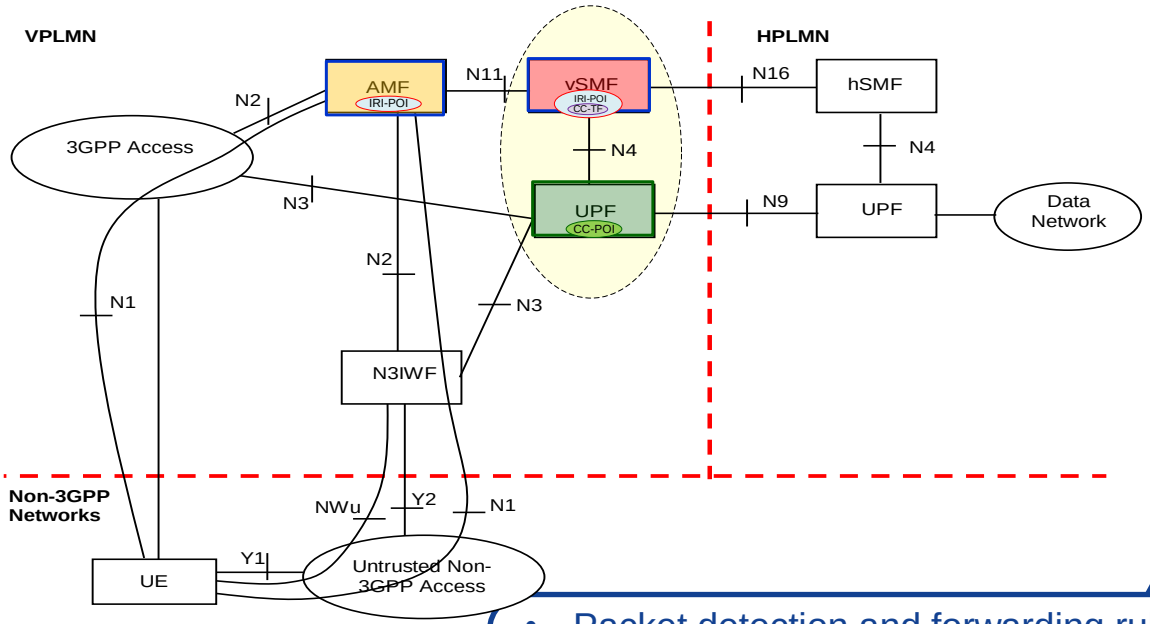

- Directly provisioned IRI-POI:
  - AMF
  - SMF
- Triggered CC-POI:
  - UPF
- CC-TF:
  - SMF

NOTE: AMF is always involved in VPLMN, and user plane packets always go through an UPF.

- Packet detection and forwarding rules (LI_T3):
  - Generate and deliver xCC from the user plane packets received over N3 (3GPP), N3 (NWIWF) and N9 to MDF3 (or received and sent over N3).

 © Nokia 2018

NOKIA

Drawn by N. Rao

TS 23.501 figure 4.2.8.2.3-1: HR Roaming architecture for 5GS with non-3GPP access - N3IWF in the same VPLMN as 3GPP access - HPLMN

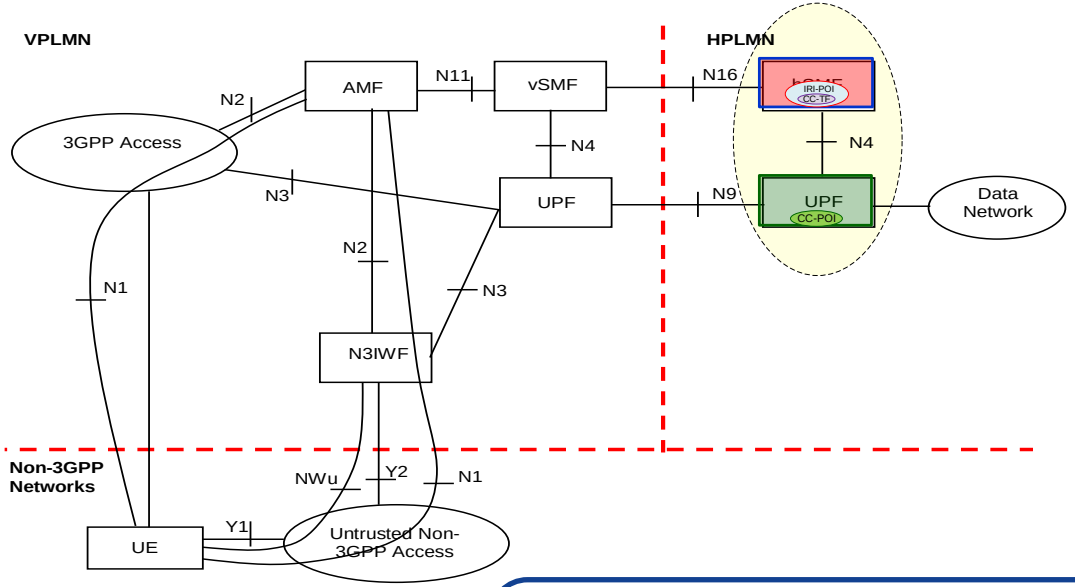

- Directly provisioned IRI-POI:
  - h-SMF
- Triggered CC-POI:
  - UPF
- CC-TF:
  - h-SMF

- Packet detection and forwarding rules (LI_T3):
  - Generate and deliver xCC from the user plane packets received over N9 and N6 (not shown) to MDF3 (or received and sent over N9).

 © Nokia 2018

NOKIA

Drawn by N. Rao

TS 23.501 figure 4.2.8.2.4-1: LBO Roaming Architecture for Non-3GPP Accesses, N3IWF in different PLMN from 3GPP access, VPLMN2 or HPLMN

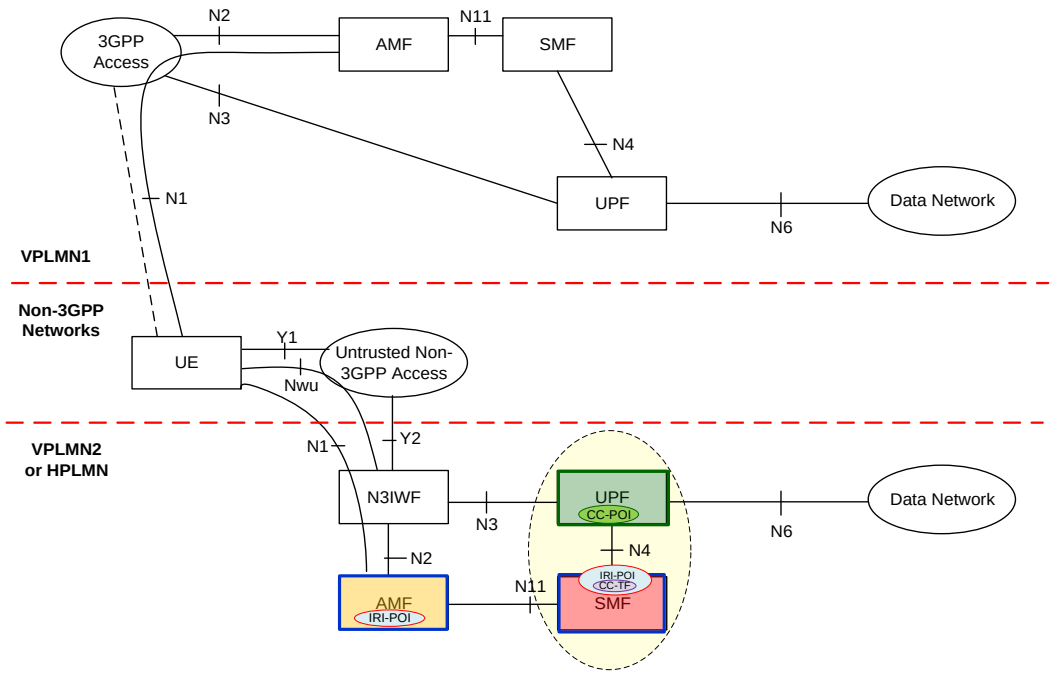

- Directly provisioned IRI-POI:
  - AMF, SMF
- Triggered CC-POI:
  - UPF
- CC-TF:
  - SMF

NOTE: AMF is always involved in VPLMN2 or HPLMN, and user plane packets always go through an UPF.

- Packet detection and forwarding rules (LI_T3):
  - Generate and deliver xCC from the user plane packets received over N3 and N6 to MDF3 (or received and sent over N3).

 © Nokia 2018

NOKIA

Drawn by N. Rao

TS 23.501 figure 4.2.8.2.4-1: LBO Roaming Architecture for Non-3GPP Accesses, N3IWF in different PLMN from 3GPP access, VPLMN1

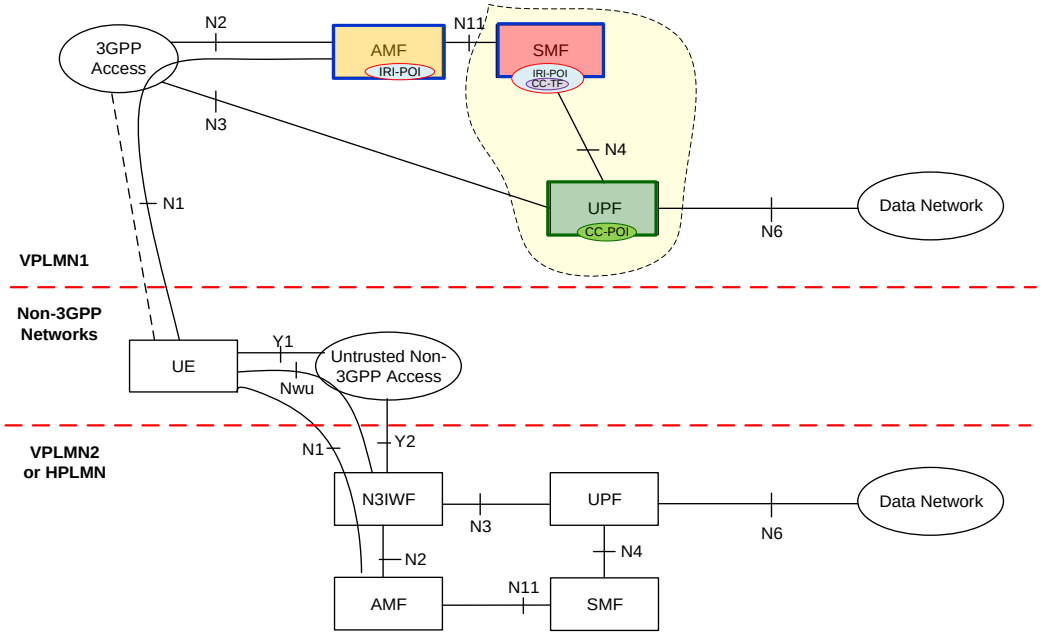

- Directly provisioned IRI-POI:
  - AMF, SMF
- Triggered CC-POI:
  - UPF
- CC-TF:
  - SMF

- Packet detection and forwarding rules (LI_T3):
  - Generate and deliver xCC from the user plane packets received over N3 and N6 to MDF3 (or received and sent over N3).

 © Nokia 2018

NOKIA

Drawn by N. Rao

TS 23.501 figure 4.2.8.2.5-1: HR Roaming architecture for 5GS with non-3GPP access - N3IWF in the different VPLMN from the 3GPP access, VPLMN2

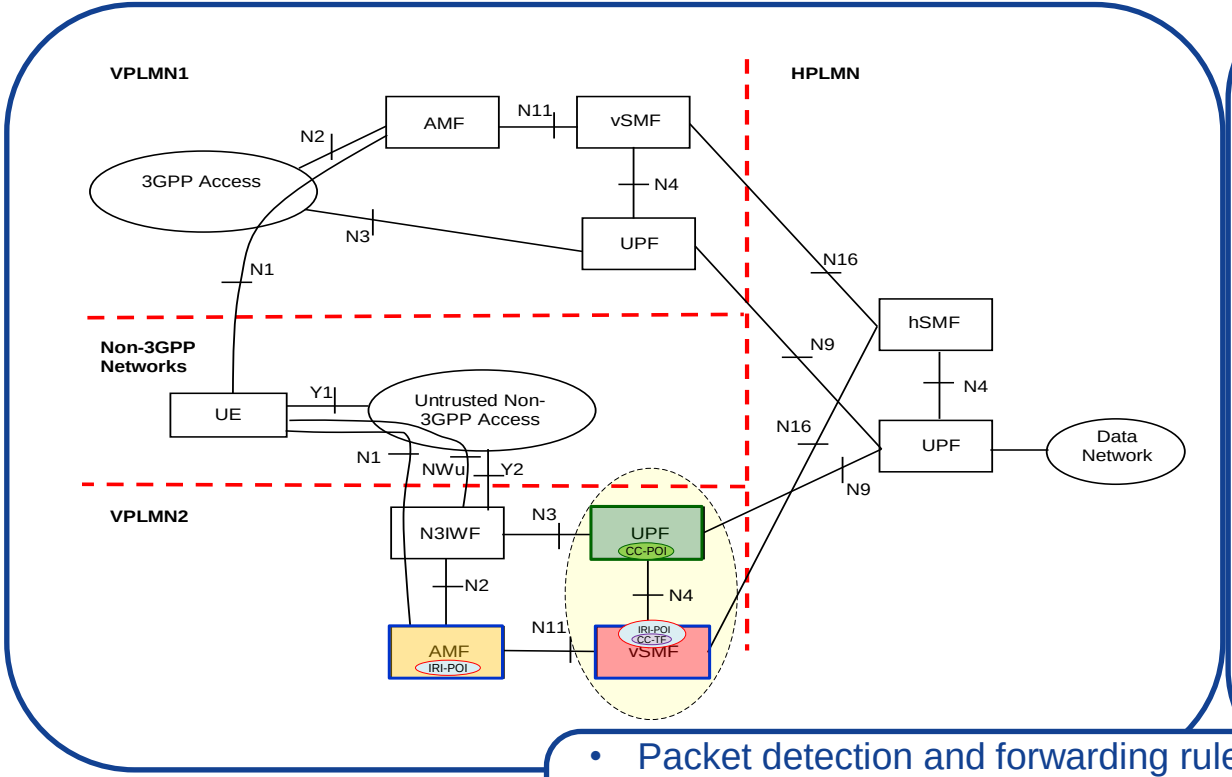

- Directly provisioned IRI-POI:
  - AMF, vSMF
- Triggered CC-POI:
  - UPF
- CC-TF:
  - vSMF

NOTE: AMF is always involved in VPLMN2 or HPLMN, and user plane packets always go through an UPF.

- Packet detection and forwarding rules (LI_T3):
  - Generate and deliver xCC from the user plane packets received over N3 and N9 to MDF3 (or received and sent over).

 © Nokia 2018

NOKIA

Drawn by N. Rao

TS 23.501 figure 4.2.8.2.5-1: HR Roaming architecture for 5GS with non-3GPP access - N3IWF in the different VPLMN from the 3GPP access, VPLMN1

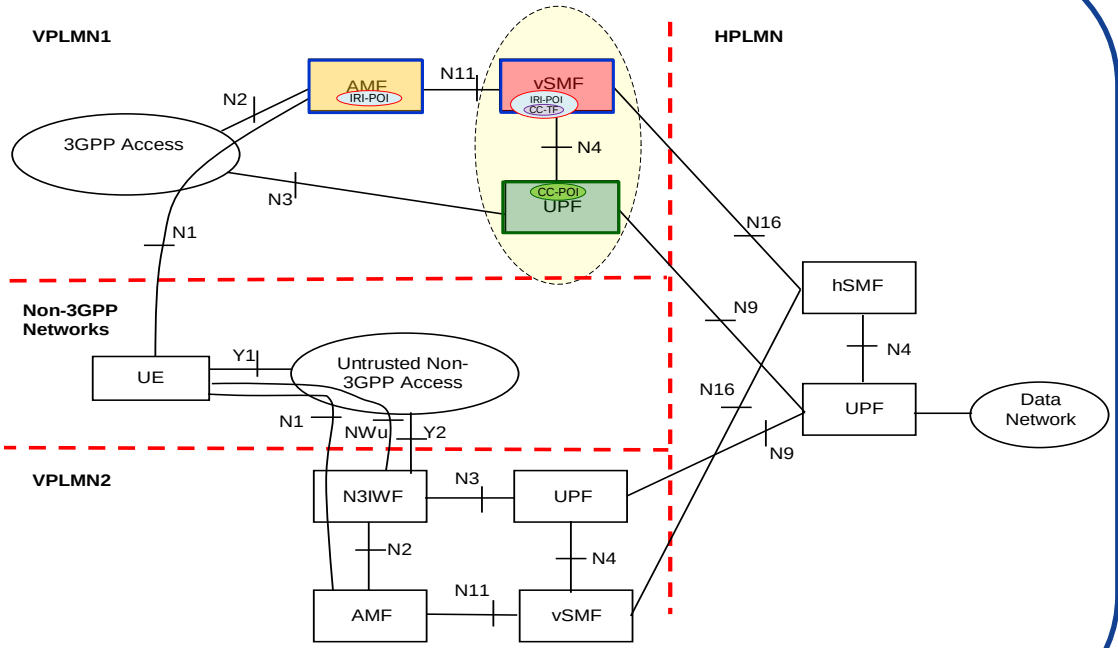

- Directly provisioned IRI-POI:
  - AMF, vSMF
- Triggered CC-POI:
  - UPF
- CC-TF:
  - vSMF

- Packet detection and forwarding rules (LI_T3):
  - Generate and deliver xCC from the user plane packets received over N3 and N9 to MDF3 (or received or sent over) N3.

 © Nokia 2018

NOKIA

Drawn by N. Rao

TS 23.501 figure 4.2.8.2.5-1: HR Roaming architecture for 5GS with non-3GPP access - N3IWF in the different VPLMN from the 3GPP access, HPLMN

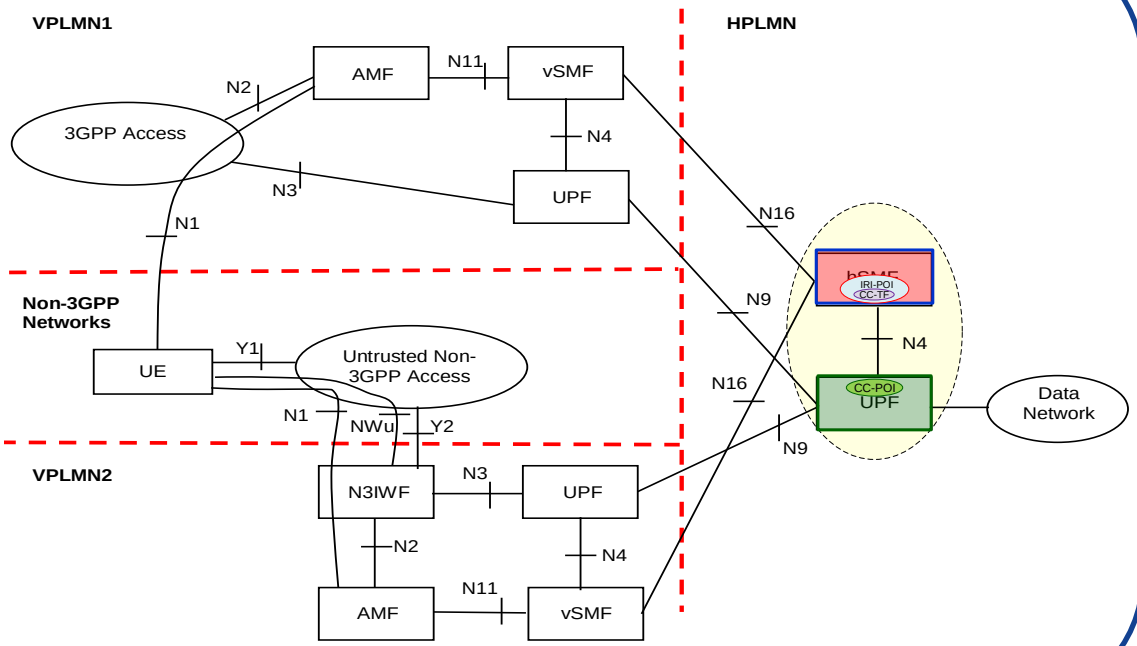

- Directly provisioned IRI-POI:
  - hSMF, UDM (not shown)
- Triggered CC-POI:
  - UPF
- CC-TF:
  - hSMF

- Packet detection and forwarding rules (LI_T3):
  - Generate and deliver xCC from the user plane packets received over N9, N9 and N6 (not shown) to MDF3 (or received and sent over N9).

 © Nokia 2018

NOKIA

Drawn by N. Rao

TS 23.501 figure 4.2.8.2.5-2: HR Roaming architecture for 5GS with non-3GPP access - N3IWF in HPLMN and different PLMN in 3GPP access, HPLMN

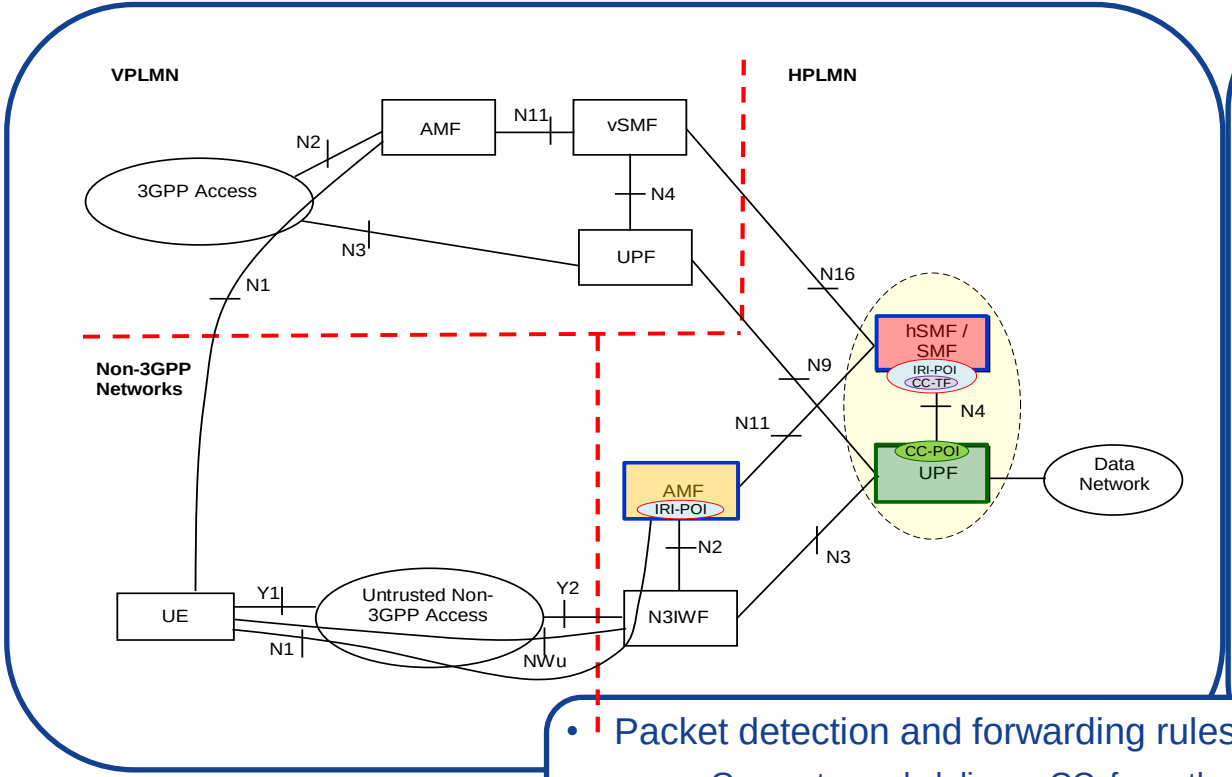

- Directly provisioned IRI-POI:
  - AMF, hSMF.SMF, UDM (not shown)
- Triggered CC-POI:
  - UPF
- CC-TF:
  - hSMF/SMF

NOTE: AMF is always involved in HPLMN, and user plane packets always go through an UPF.

- Packet detection and forwarding rules (LI_T3):
  - Generate and deliver xCC from the user plane packets received over N9, N3 and N6 (not shown) to MDF3 (or received and sent over N9 and N3).

 © Nokia 2018

NOKIA

Drawn by N. Rao

TS 23.501 figure 4.2.8.2.5-2: HR Roaming architecture for 5GS with non-3GPP access - N3IWF in HPLMN and different PLMN in 3GPP access, VPLMN

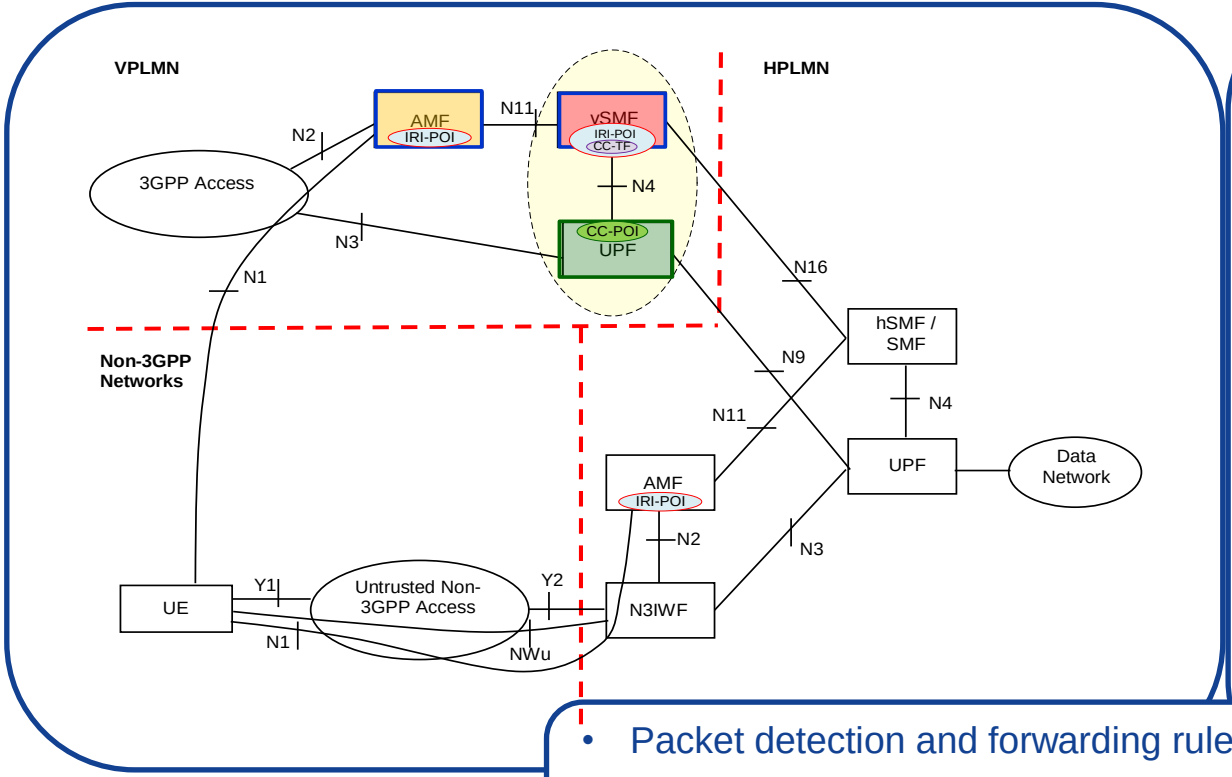

- Directly provisioned IRI-POI:
  - AMF, vSMF
- Triggered CC-POI:
  - UPF
- CC-TF:
  - vSMF

- Packet detection and forwarding rules (LI_T3):
  - Generate and deliver xCC from the user plane packets received over N3 and N9 to MDF3 (or received and sent over N3)

 © Nokia 2018

NOKIA

Drawn by N. Rao

Interworking with EPC

 © 2018 Nokia

TS 23.501 figure 4.3.1-1: Non-roaming architecture for interworking between 5GS and EPC/E-UTRAN

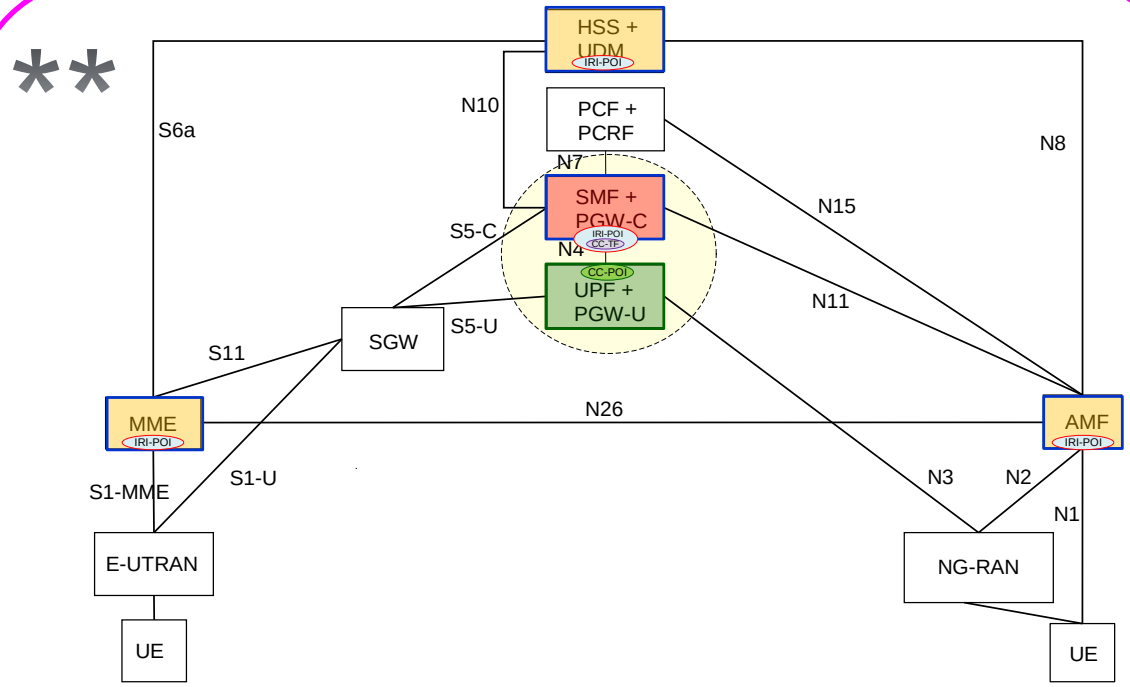

- Directly provisioned IRI-POI:
  - HSS + UDM, SMF + PGW-C, MME, AMF
- Triggered CC-POI:
  - UPF + PGW-U
- CC-TF:
  - SMF + PGW-C

NOTE: No interception at SGW since interception is PGW is required. EPC CUPS LI Model is not extended to 5GC. LI at SMF + PGW-C & UPF + PGW-U without SX3LIF – backward compatible issue?

- Packet detection and forwarding rules (LI_T3):
  - Generate and deliver xCC from the user plane packets received over S5-U, N3 and N6 (not shown) to MDF3 (or received and sent over S5-U and received and sent over N3).

 © Nokia 2018

NOKIA

Drawn by N. Rao

TS 23.501 figure 4.3.2-1: LBO roaming architecture for interworking between 5GC and EPC/E-UTRAN, VPLMN

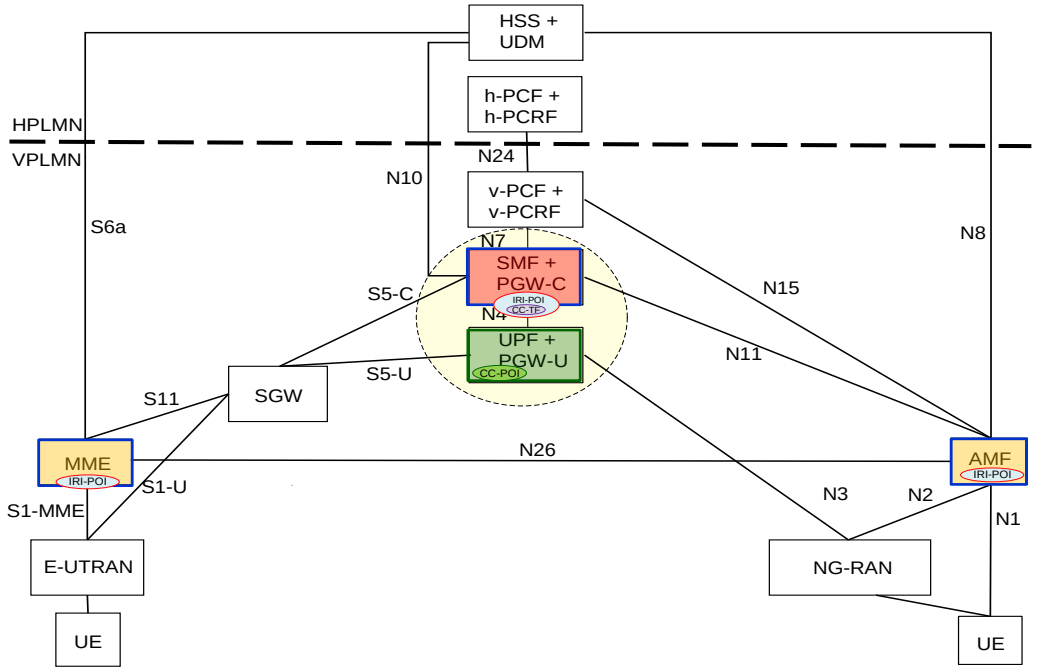

- Directly provisioned IRI-POI:
  - SMF + PGW-C, MME, AMF
- Triggered CC-POI:
  - UPF + PGW-U
- CC-TF:
  - SMF + PGW-C

NOTE: No interception at SGW since interception in PGW is required. EPC CUPS LI Model is not extended to 5GC. LI at SMF + PGW-C & UPF + PGW-U without SX3LIF – backward compatible issue?

- Packet detection and forwarding rules (LI_T3):
  - Generate and deliver xCC from the user plane packets received over S5-U, N3 and N6 (not shown) to MDF3 (or received and sent over S5-U and received and sent over N3).

 © Nokia 2018

NOKIA

Drawn by N. Rao

TS 23.501 figure 4.3.2-1: LBO roaming architecture for interworking between 5GS and EPC/E-UTRAN, HPLMN

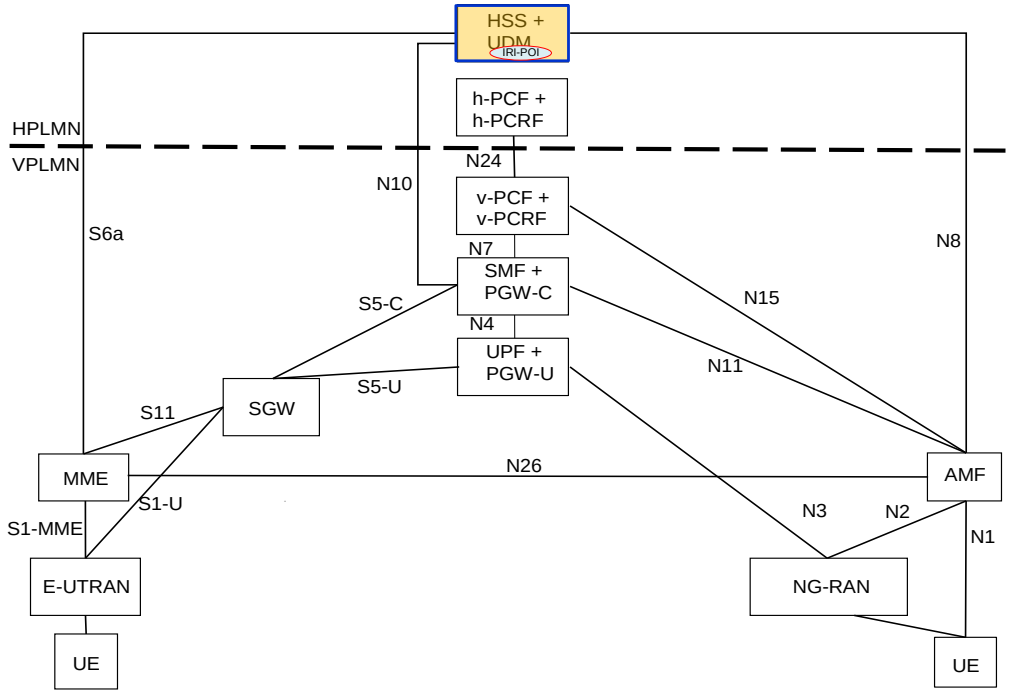

- Directly provisioned IRI-POI:
  - HSS + UDM

 © Nokia 2018

NOKIA

Drawn by N. Rao

TS 23.501 figure 4.3.2-2: HR roaming architecture for interworking between 5GS and EPC/E-UTRAN, VPLMN

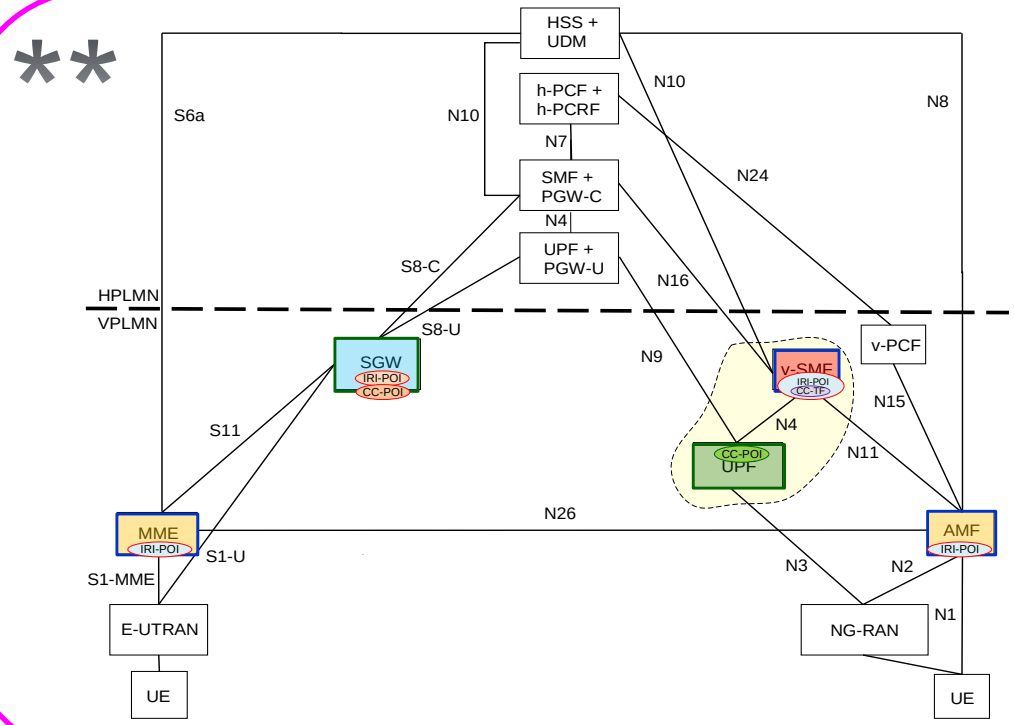

- Directly provisioned IRI-POI:
  - V-SMF, MME, AMF, SGW
- Directly provisioned CC-POI:
  - SGW
- Triggered CC-POI:
  - UPF
- CC-TF:
  - v-SMF

NOTE: Interception at SGW is required since the user plane packets do not go through UPF.

- Packet detection and forwarding rules (LI_T3):
  - Generate and deliver xCC from the user plane packets received over N3 and N9 to MDF3 (or received and sent over N3).

 © Nokia 2018

NOKIA

Drawn by N. Rao

TS 23.501 figure 4.3.2-2: HR roaming architecture for interworking between 5GS and EPC/E-UTRAN, HPLMN

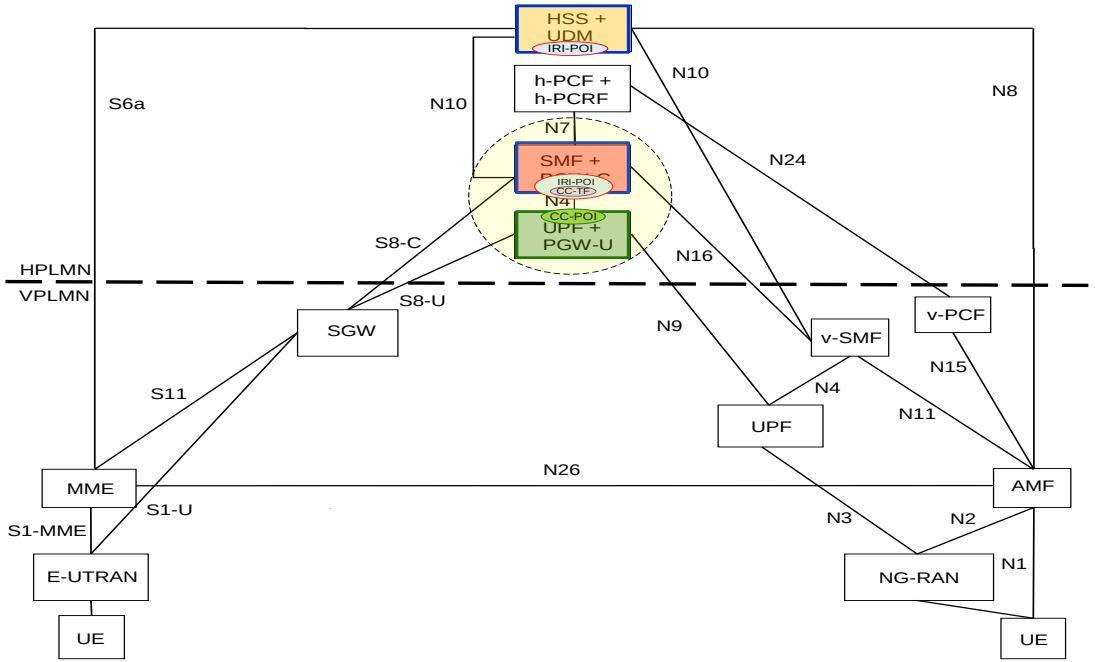

- Directly provisioned IRI-POI:
  - HSS + UDM, SMF + PGW-C
- Triggered CC-POI:
  - UPF + PGW-U
- CC-TF:
  - SMF + PGW-C

NOTE: EPC CUPS LI Model is not extended to 5GC. LI at SMF + PGW-C & UPF + PGW-U without SX3LIF – backward compatible issue?

- Packet detection and forwarding rules (LI_T3):
  - Generate and deliver xCC from the user plane packets received over S8-U, N9 and N6 (not shown) to MDF3 (or received and sent over s5-U and N9).

 © Nokia 2018

NOKIA

Drawn by N. Rao

Interworking between 5GS via non-3GPP access and EPC

 © 2018 Nokia

TS 23.501 figure 4.3.3-1: Non-roaming architecture for interworking between 5GS via non-3GPP access and EPC/E-UTRAN

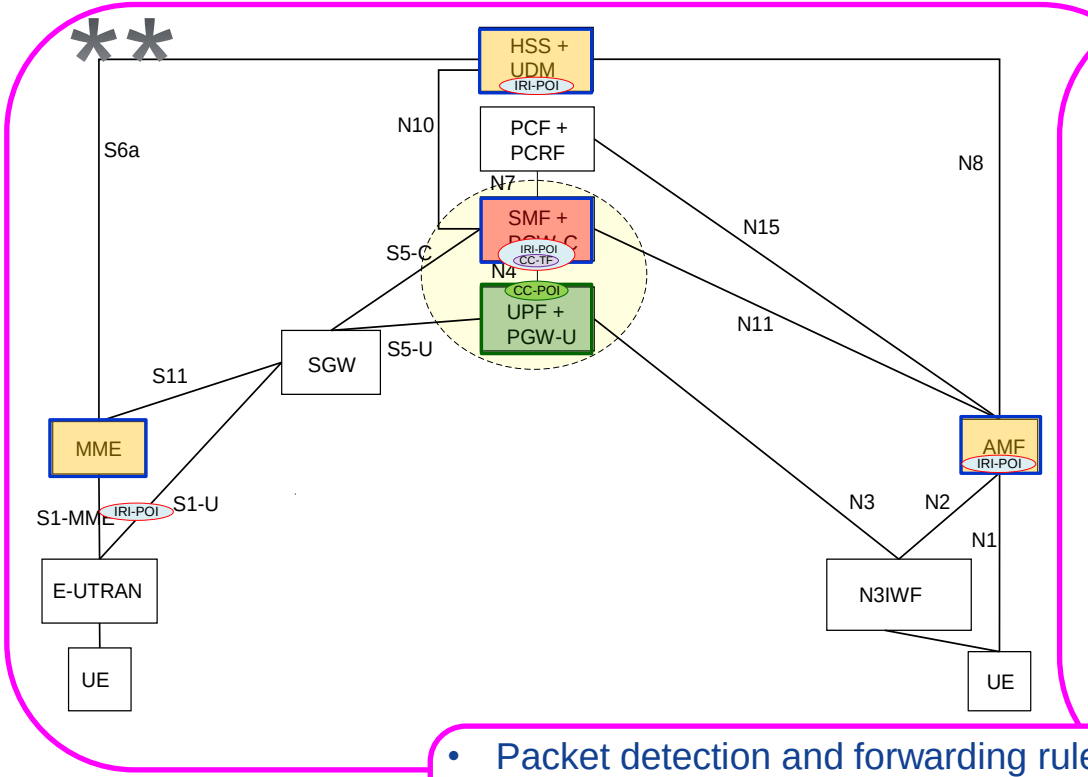

- Directly provisioned IRI-POI:
  - SMF+ PGW-C, HSS + UDM, AMF, MME
- Triggered CC-POI:
  - UPF + PGW-U
- CC-TF:
  - SMF + PGW-C

NOTE: No interception at SGW since interception in PGW is required. EPC CUPS LI Model is not extended to 5GC. LI at SMF + PGW-C & UPF + PGW-U without SX3LIF – backward compatible issue?

- Packet detection and forwarding rules (LI_T3):
  - Generate and deliver xCC from the user plane packets received over S5-U, N3 and N6 (not shown) to MDF3 (or received and sent over S5-U and N3).

 © Nokia 2018

NOKIA

Drawn by N. Rao

TS 23.501 figure 4.3.3-1: LBO roaming architecture for interworking between 5GS via non-3GPP access and EPC/E-UTRAN, VPLMN

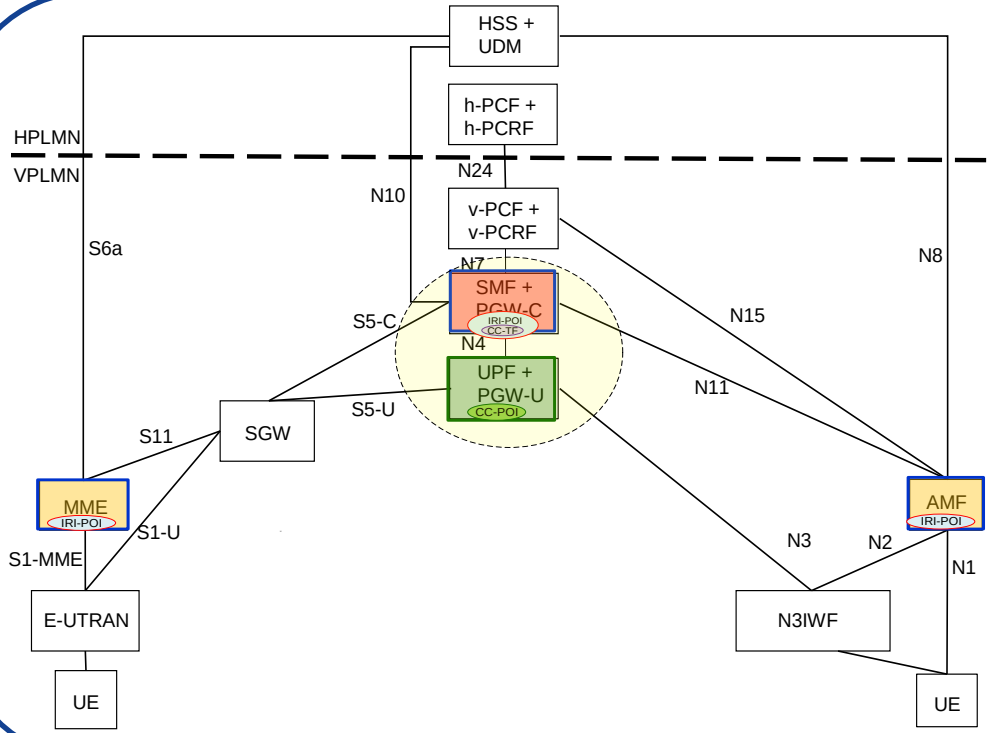

- Directly provisioned IRI-POI:
  - SMF + PGW-C, AMF, MME
- Triggered CC-POI:
  - UPF + PGW-U
- CC-TF:
  - SMF + PGW-C

NOTE: No interception at SGW since interception in PGW is required. EPC CUPS LI Model is not extended to 5GC. LI at SMF + PGW-C & UPF + PGW-U without SX3LIF – backward compatible issue?

- Packet detection and forwarding rules (LI_T3):
  - Generate and deliver xCC from the user plane packets received over S5-U, N3 and N6 (not shown) to MDF3 (or received or sent over S5-U and N3).

 © Nokia 2018

NOKIA

Drawn by N. Rao

TS 23.501 figure 4.3.3-1: LBO roaming architecture for interworking between 5GS via non-3GPP access and EPC/E-UTRAN, HPLMN

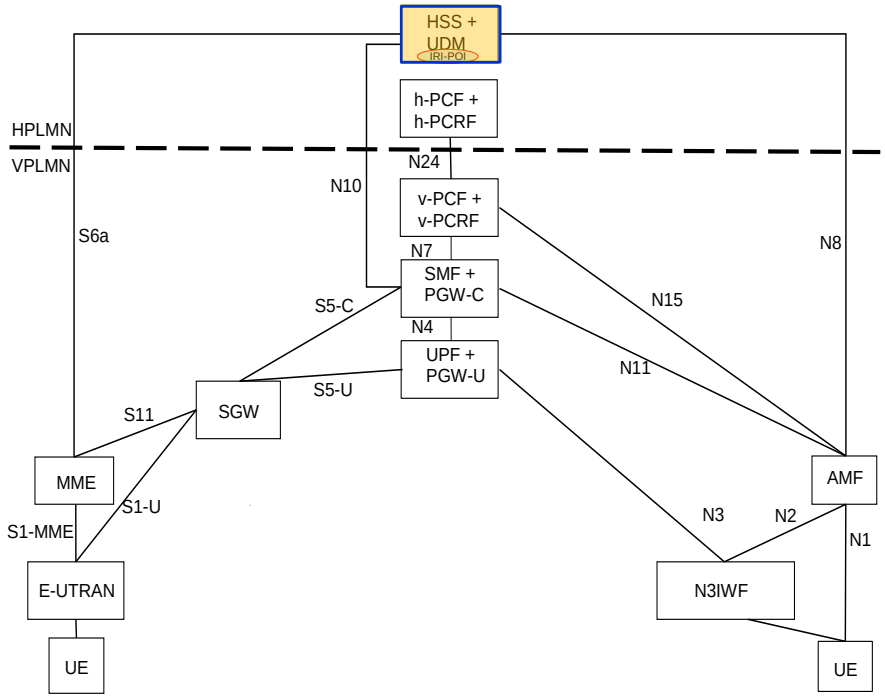

- Directly provisioned IRI-POI:
  - HSS + UDM

 © Nokia 2018

NOKIA

Drawn by N. Rao

TS 23.501 figure 4.3.3.2-2: HR roaming architecture for interworking between 5GS via non-3GPP access and EPC/E-UTRAN, VPLMN

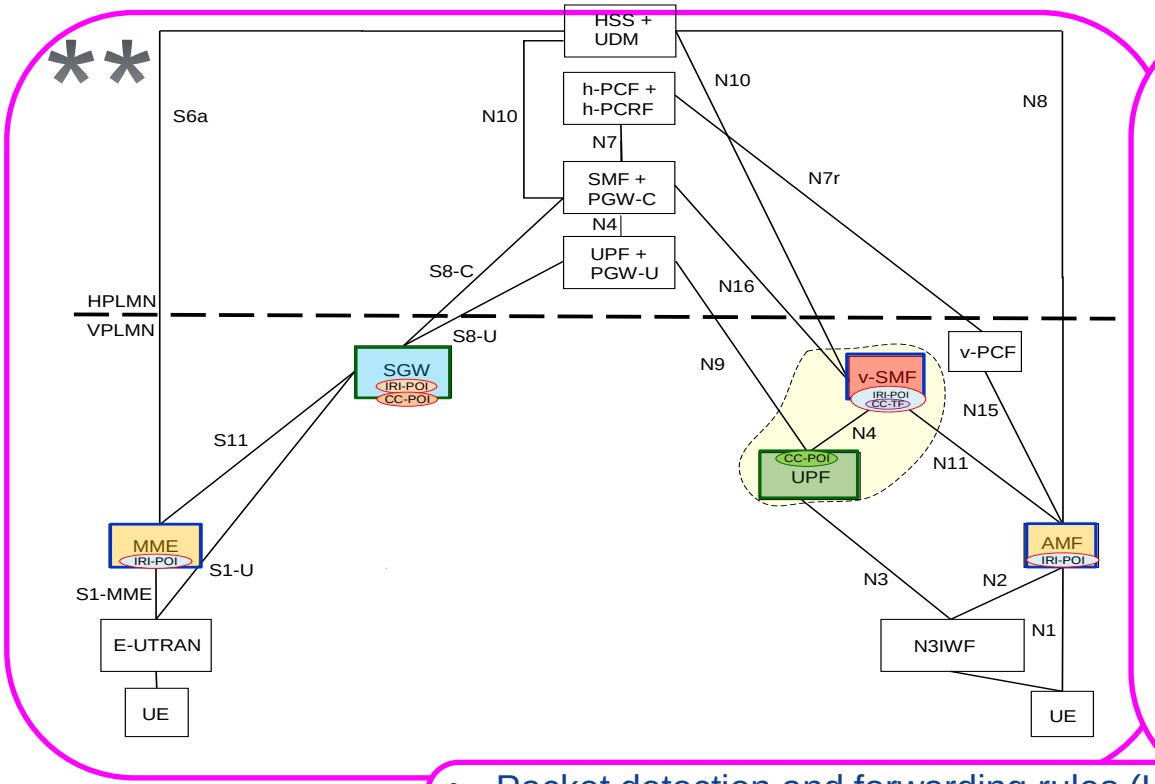

- Directly provisioned IRI-POI:
  - v-SMF, MME, AMF, SGW
- Directly provisioned CC-POI:
  - SGW
- Triggered CC-POI:
  - UPF
- CC-TF:
  - v-SMF

NOTE: Interception at SGW is required since the user plane packets do not go through UPF.

- Packet detection and forwarding rules (LI_T3):
  - Generate and deliver xCC from the user plane packets received over N3 and N9 to MDF3 (or received and sent over N3).

 © Nokia 2018

NOKIA

Drawn by N. Rao

TS 23.501 figure 4.3.3.2-2: HR roaming architecture for interworking between 5GS via non-3GPP access and EPC/E-UTRAN, HPLMN

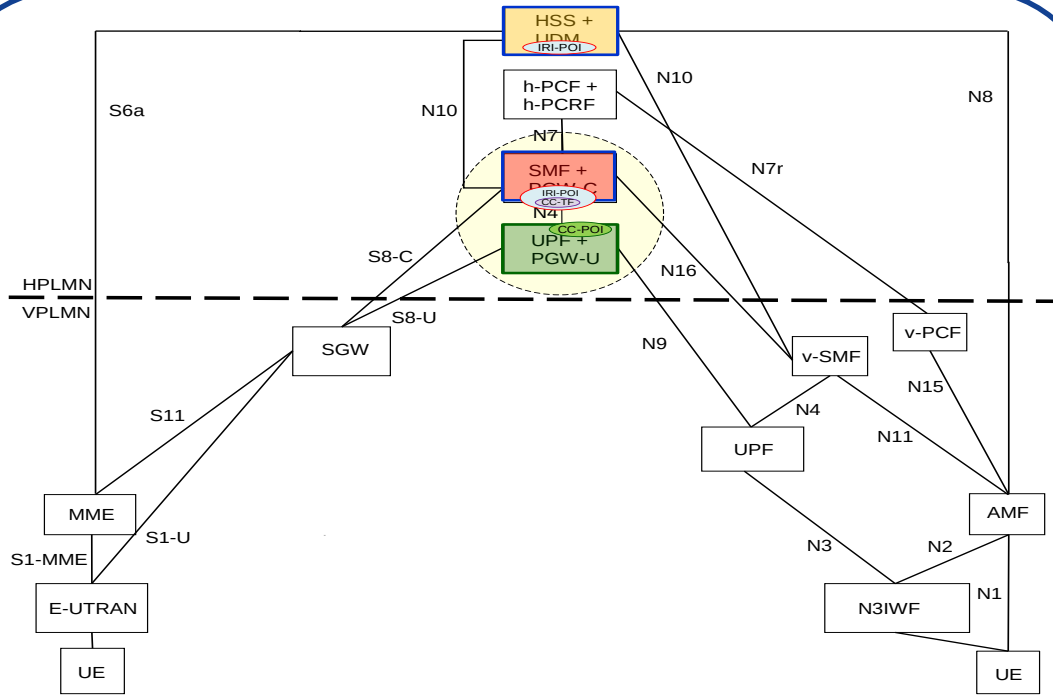

- Directly provisioned IRI-POI:
  - HSS + UDM, SMF + PGW-C
- Triggered CC-POI:
  - UPF + PGW-U
- CC-TF:
  - SMF + PGW-C

- Packet detection and forwarding rules (LI_T3):
  - Generate and deliver xCC from the user plane packets received over S8-U, N9 and N6 (not shown) to MDF3 (or received and sent over S8-U and N9).

 © Nokia 2018

NOKIA

Drawn by N. Rao

Interworking between ePDG/EPC and 5GS

 © 2018 Nokia

NOKIA

TS 23.501 figure 4.3.4-1: Non-roaming architecture for interworking between ePDG/EPC and 5GS

**

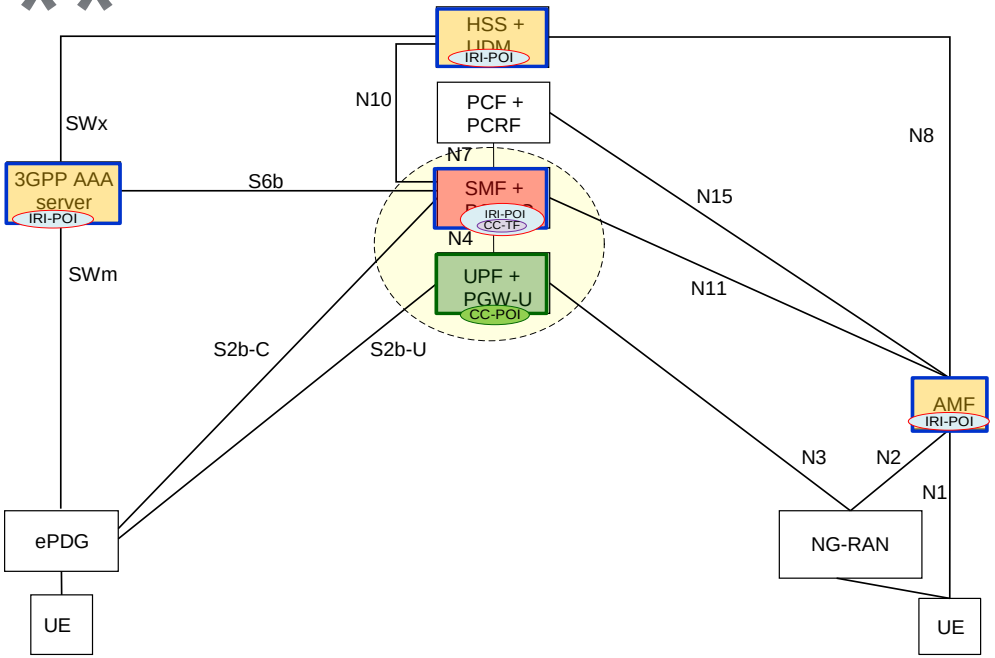

- Directly provisioned IRI-POI:
  - SMF+ PGW-C, HSS + UDM, AMF, 3GPP AAA Server
- Triggered CC-POI:
  - UPF + PGW-U
- CC-TF:
  - SMF + PGW-C

- Packet detection and forwarding rules (LI_T3):
  - Generate and deliver xCC from the user plane packets received over S2b-U, N3 and N6 (not shown) to MDF3 (or received and sent over S2b-U and N3).

 © Nokia 2018

NOKIA

Drawn by N. Rao

TS 23.501 figure 4.3.4.2-1: LBO roaming architecture for interworking between ePDG/EPC and 5GS, VPLMN

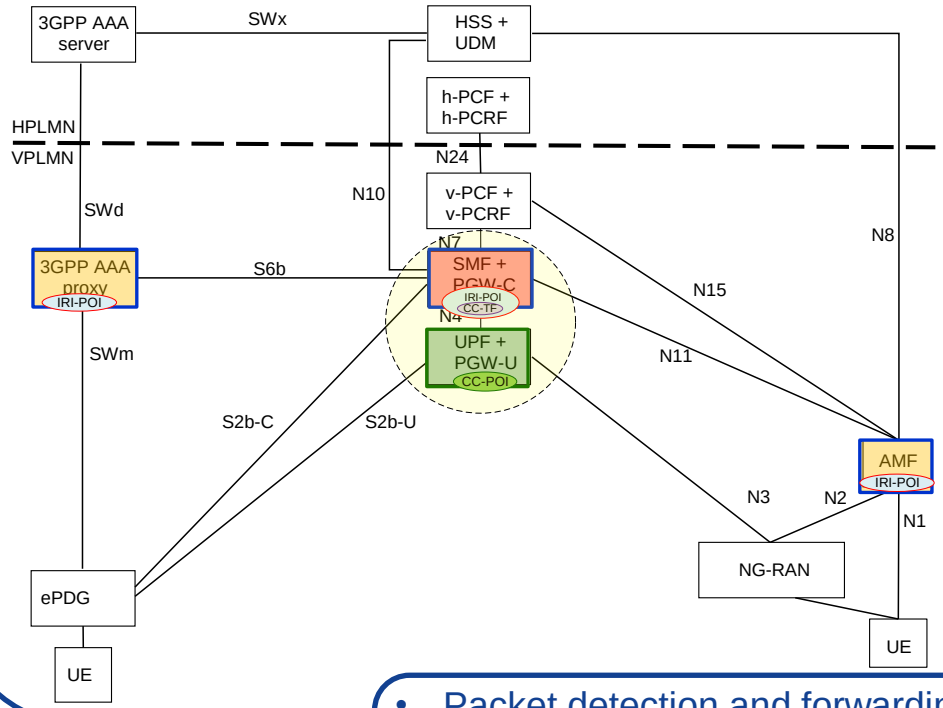

- Directly provisioned IRI-POI:
  - SMF+ PGW-C, AMF, 3GPP AAA Server
- Triggered CC-POI:
  - UPF + PGW-U
- CC-TF:
  - SMF + PGW-C

- Packet detection and forwarding rules (LI_T3):
  - Generate and deliver xCC from the user plane packets received over S2b-U, N3 and N6 (not shown) to MDF3 (or received and sent over S2b-U and N3).

 © Nokia 2018

NOKIA

Drawn by N. Rao

TS 23.501 figure 4.3.4.2-1: LBO roaming architecture for interworking between ePDG/EPC and 5GS, HPLMN

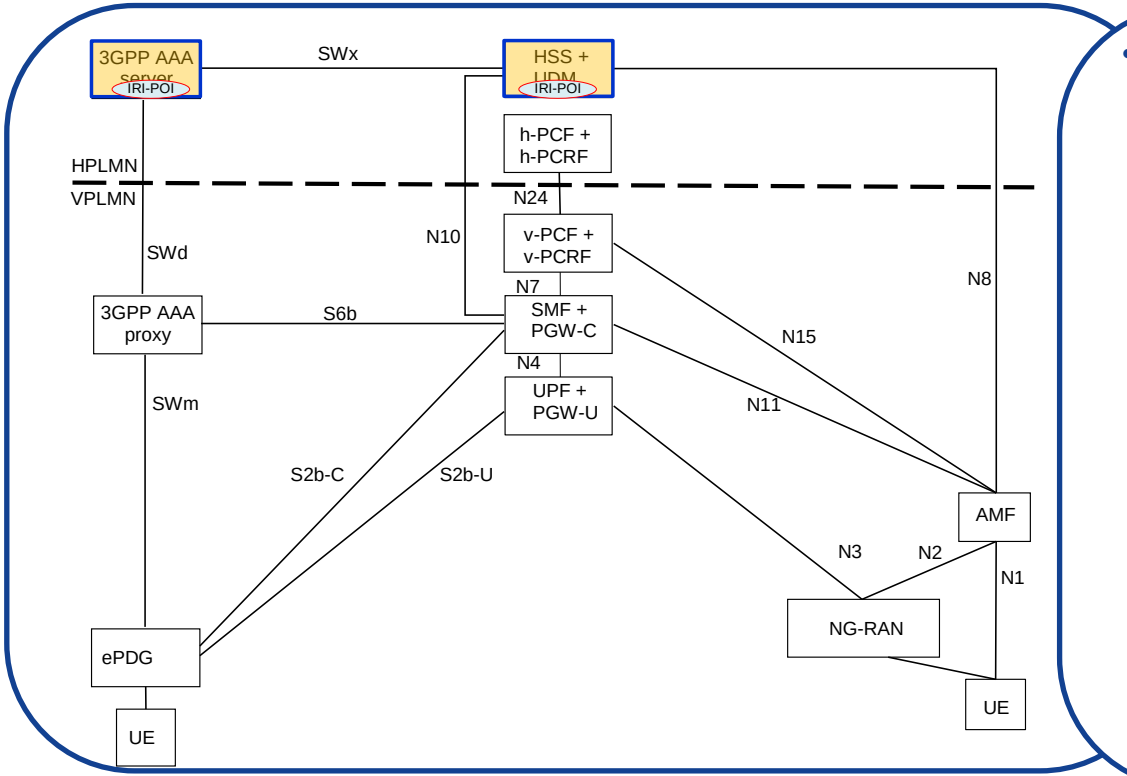

- Directly provisioned IRI-POI:
  - HSS + UDM, 3GPP AAA Server

 © Nokia 2018

NOKIA

Drawn by N. Rao

TS 23.501 figure 4.3.4.2-2: HR roaming architecture for interworking between ePDG/EPC and 5GS, VPLMN

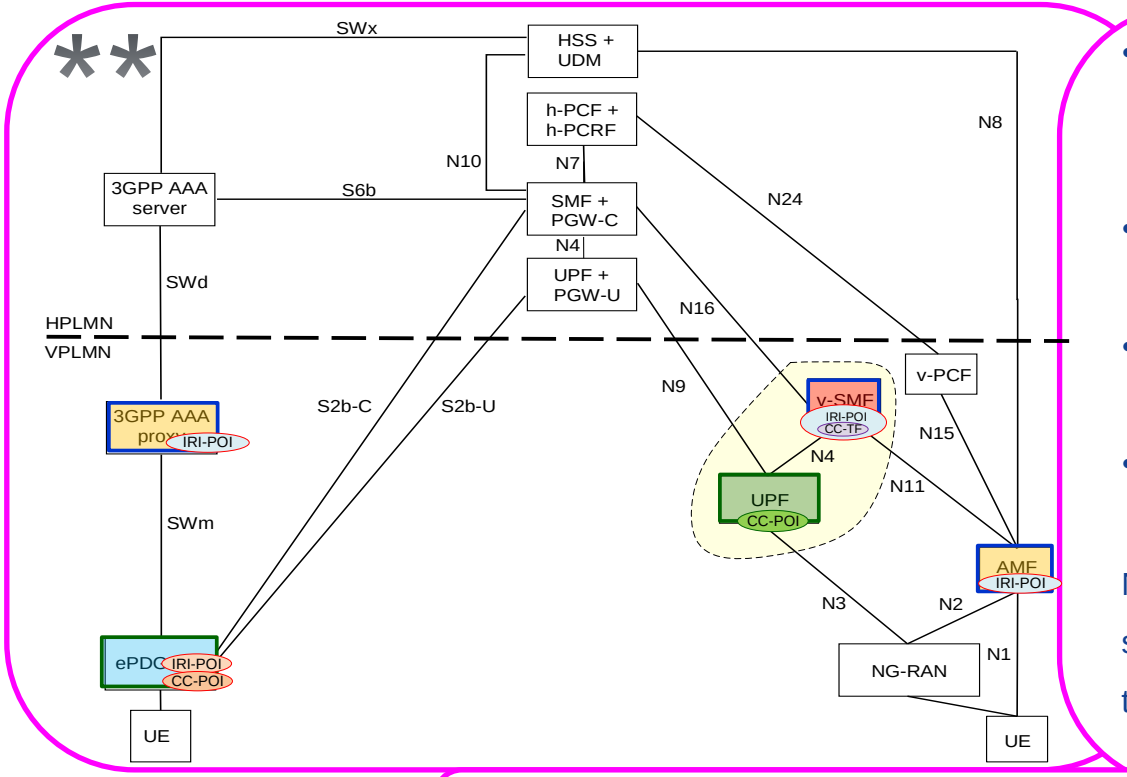

- Directly provisioned IRI-POI:
  - v-SMF+ PGW-C, AMF, 3GPP AAA Server, ePDG
- Directly triggered CC-POI:
  - ePDG
- Triggered CC-POI:
  - UPF + PGW-U
- CC-TF:
  - v-SMF + PGW-C

NOTE: CC interception at ePDG may be required since the related user plane packets do not go through an UPF in the VPLMN.

- Packet detection and forwarding rules (LI_T3):
  - Generate and deliver xCC from the user plane packets received over N3 and N9 to MDF3 (or received and sent over N3).

 © Nokia 2018

NOKIA

Drawn by N. Rao

TS 23.501 figure 4.3.4.2-2: HR roaming architecture for interworking between ePDG/EPC and 5GS, HPLMN

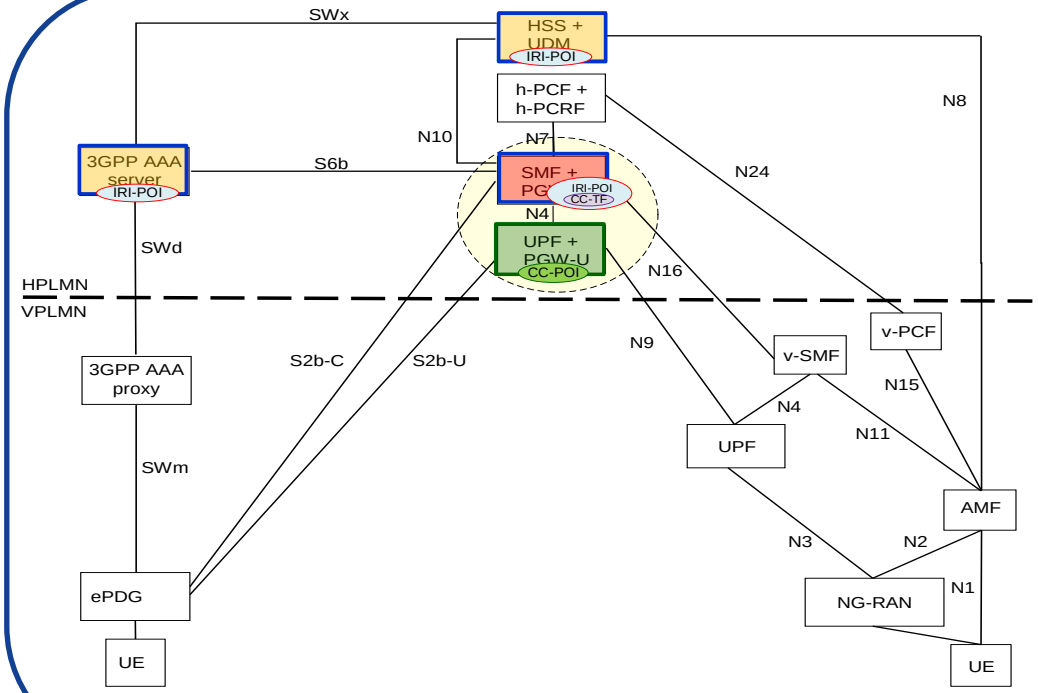

- Directly provisioned IRI-POI:
  - HSS + UDM, h-SMF+ PGW-C, 3GPP AAA Server
- Triggered CC-POI:
  - UPF + PGW-U
- CC-TF:
  - h-SMF + PGW-C

- Packet detection and forwarding rules (LI_T3):
  - Generate and deliver xCC from the user plane packets received over S2b-U, N9 and N6 (not shown) to MDF3 (or received and sent over S2b-U and N9).

 © Nokia 2018

NOKIA

Drawn by N. Rao

Scenarios that may require special mention in TS 23.127

1. Non-roaming scenarios:
   - Target UE with one PDU session with one DN connection
   - Target UE with one PDU session and multiple DN connections
   - Target UE with multiple PDU sessions.
2. Roaming Scenarios:
   - Nothing special, and hence, no special analysis is required.
3. Non-3GPP access:
   - To illustrate the concept, one topology view with non-roaming scenario.
4. Interworking with EPC:
   - To illustrate the concept, one topology view with non-roaming scenario.
   - The roaming architecture with HR has a special differences, hence, worth to have one.

 © Nokia 2018

NOKIA

Drawn by N. Rao

Scenarios that may require special mention in TS 23.127

5. Interworking between 5GS via non-3GPP access and EPC:
    - To illustrate the concept, one topology view with non-roaming scenario.
    - The roaming architecture with HR has a special differences, hence, worth to have one.
6. Interworking between ePDG/EPC and 5GS:
    - To illustrate the concept, one topology view with non-roaming scenario.
    - The roaming architecture with HR has a special differences, hence, worth to have one.

 © Nokia 2018

NOKIA

Drawn by N. Rao

NOKIA

 © Nokia 2018

Drawn by N. Rao