IP based HO for CS Intercepts

- Presentation

- Nagaraja (Nag) Rao

- 01-24-2017

 © Nokia 2017

NOKIA

Background

 © Nokia 2017

NOKIA
Created by Nag Rao

Objective: Provide IP-based HO Interface to LEMF

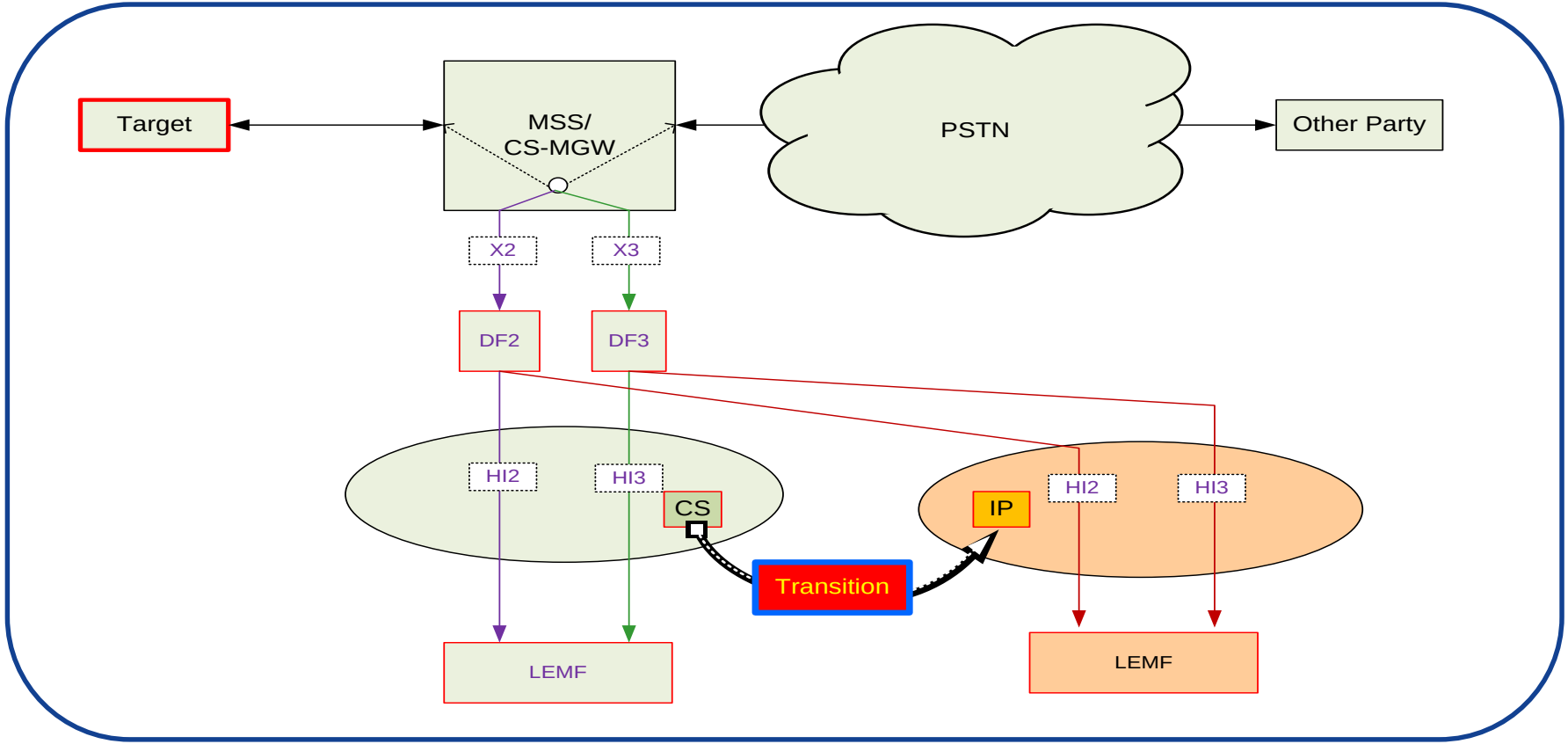

 © Nokia 2017

NOKIA

Created by Nag Rao

Background: Current CS Interception examples

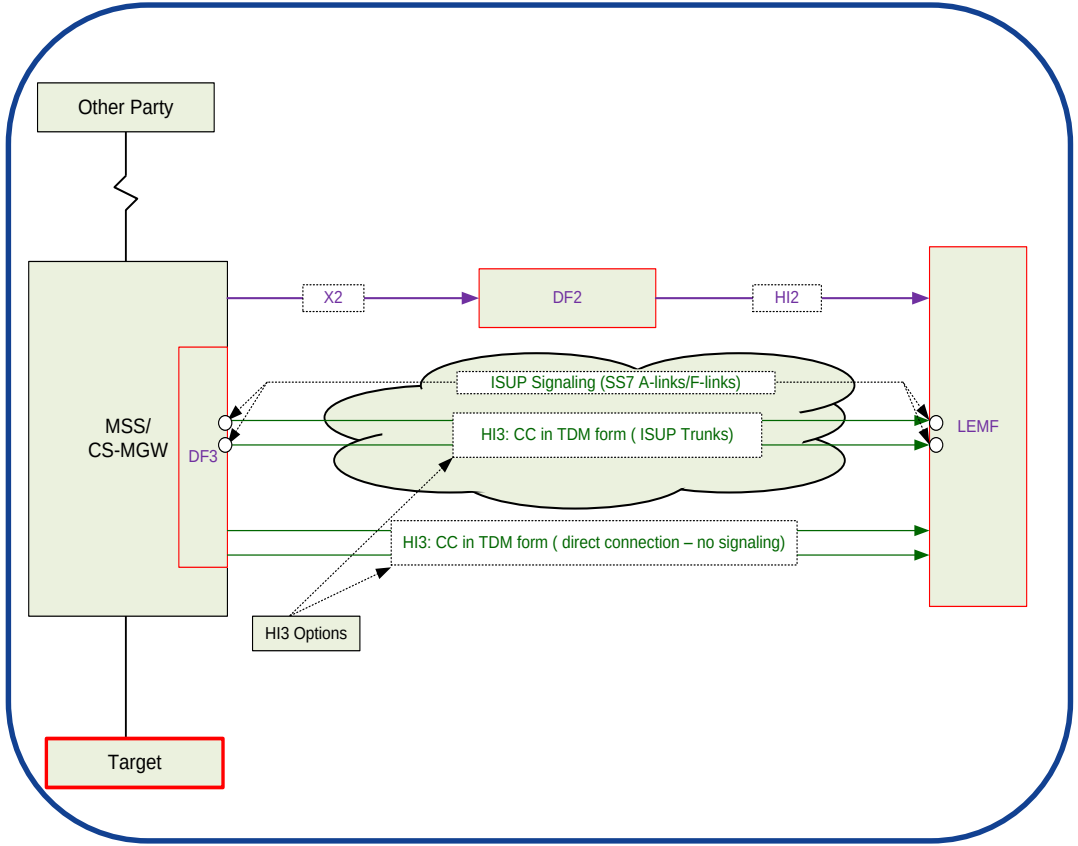

- IRI
  - The IRI for CS are discrete messages as defined in 3GPP TS 33.108 B.3a.
- CC:
  - Delivered in the TDM form via direct connection or via ISUP trunks to the LEMF.
    - May be delivered over DF3
    - May be delivered directly to LEMF (DF3 presumed to be part of ICE).
  - For separated delivery option, media to and from target are delivered on separate ISUP trunks
    - One call per ISUP trunk.
  - ISUP signaling may be via SS7 A-links (typical) or F-links.

 © Nokia 2017

NOKIA
Created by Nag Rao

TDM to IP Conversions

 © Nokia 2017

NOKIA
Created by Nag Rao

Methods used to establish calls between TDM networks over IP domain

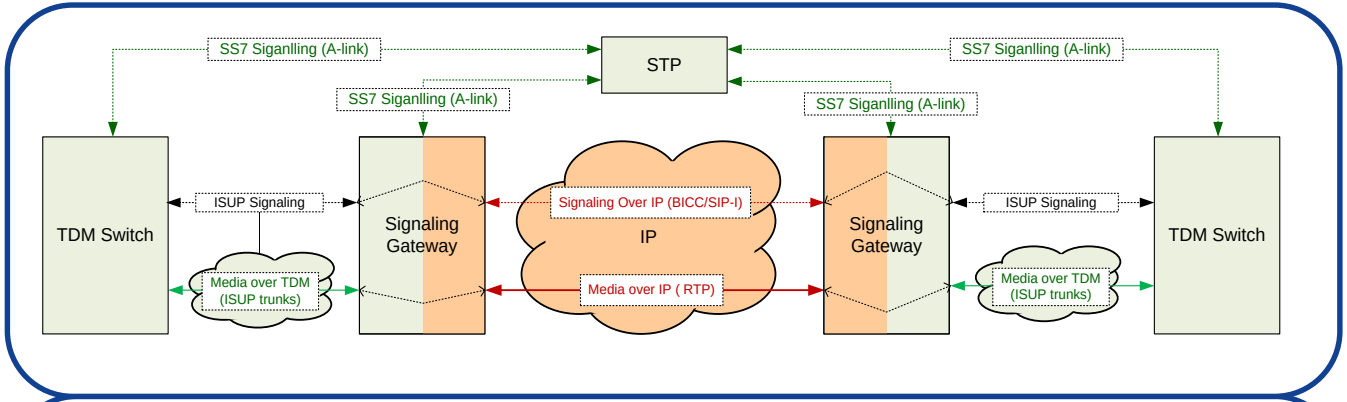

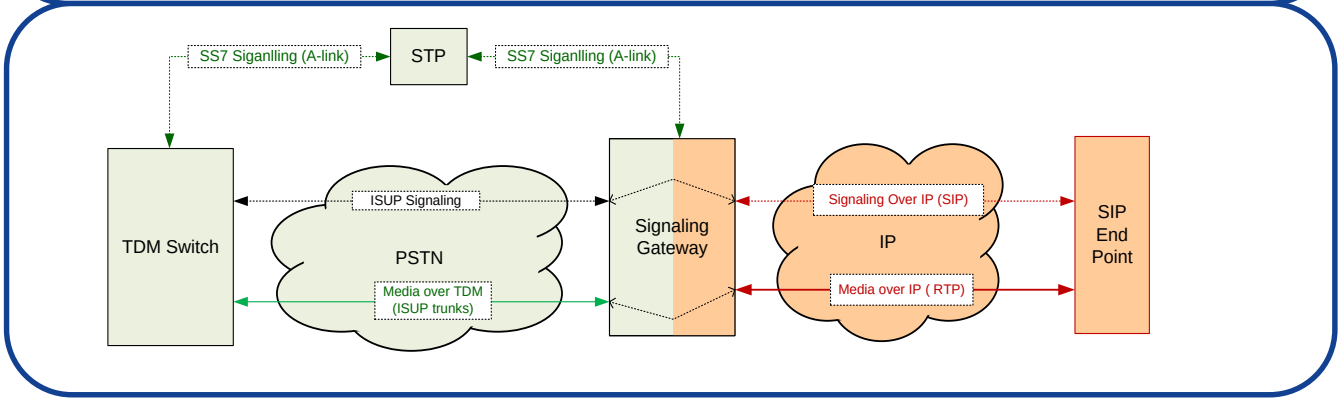

- Bearer Independent Call Control (BICC) or SIP with encapsulated ISUP message is used to establish connection between two ISUP-based TDM networks over the domain.
- The media within the IP domain is in the RTP form.
- When one end point is SIP, SIP-I (Profile A or Profile B) or SIP itself may be used.

 © Nokia 2017

NOKIA
Created by Nag Rao

IP based HO for CS Intercepts

 © Nokia 2017

NOKIA
Created by Nag Rao

IP-based HO interface for CS Intercepts – Scenario 1

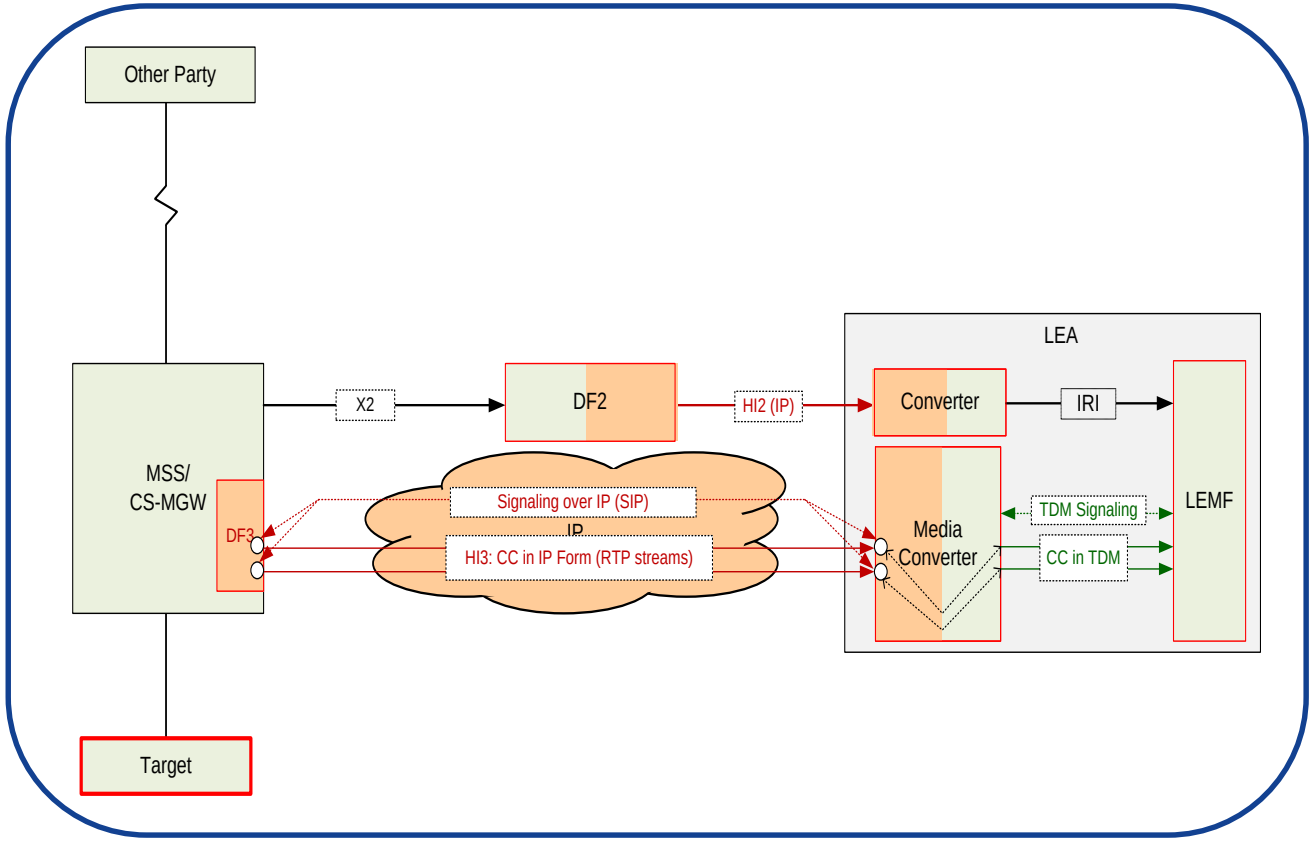

- Due to the fact that IRI are in the form of discrete messages, one can presume that the IRI can be transported over the IP domain to LEMF, if necessary.
- The diagram shows that DF2 delivers the IRI over the IP domain.
- The DF3 integrated into the ICE delivers the CC toward the LEMF in the IP form (RTP streams) using SIP for the call setup.
- There will be two separate RTP streams, one for each direction of the voice flow.
- In this example, the LEA use old TDM-based equipment, and therefore, example shows a reverse conversion of IRI/CC to the pre-IP form.

 © Nokia 2017

NOKIA
Created by Nag Rao

IP-based HO interface for CS Intercepts – Scenario 2

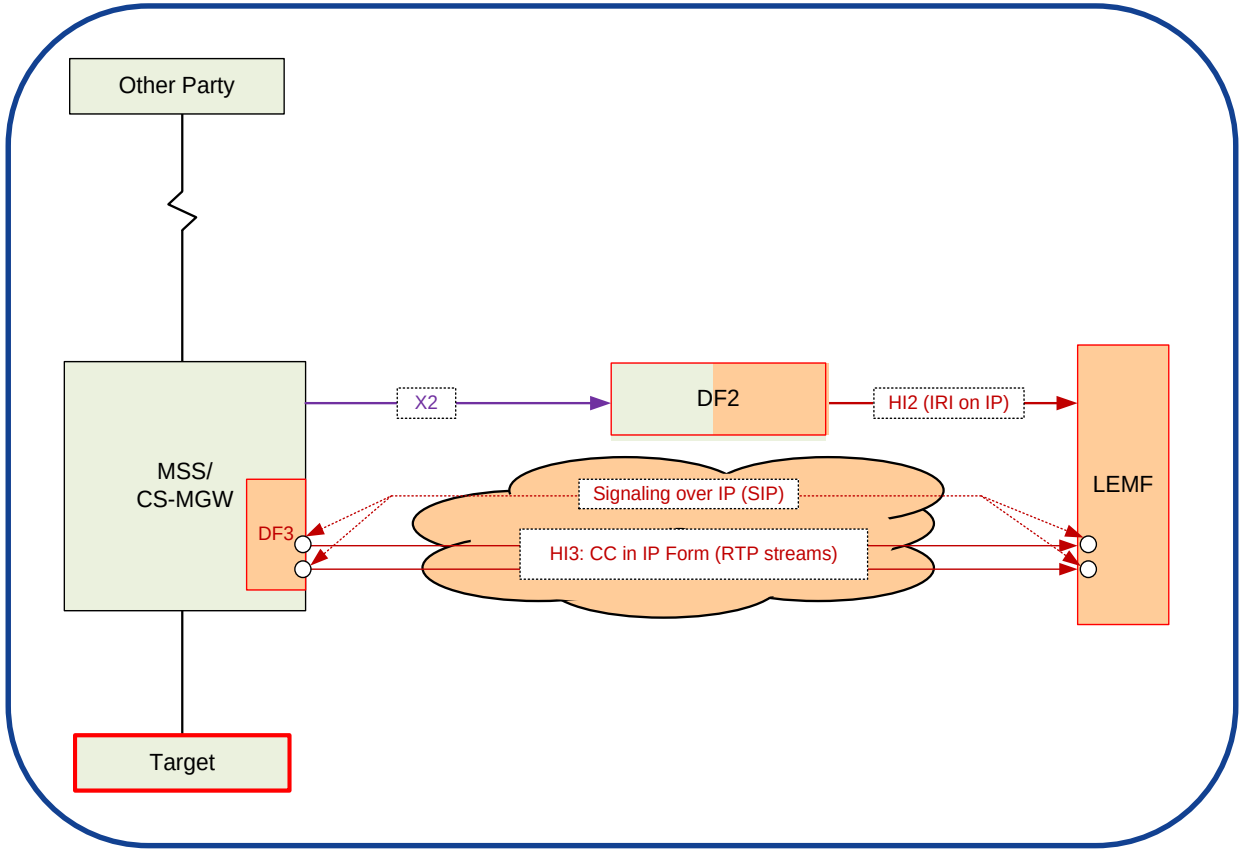

- Due to the fact that IRI are in the form of discrete messages, one can presume that the IRI can be transported over the IP domain to LEMF, if necessary.
- The diagram shows that DF2 delivers the IRI over the IP domain.
- The DF3 integrated into the ICE delivers the CC toward the LEMF in the IP form (RTP streams) using SIP for the call setup.
- There will be two separate RTP streams, one for each direction of the voice flow.
- In this example, the LEA has upgraded the collection equipment and therefore, no reverse conversion is necessary.

 © Nokia 2017

NOKIA
Created by Nag Rao

IP-based HO interface for CS Intercepts – Scenario 3

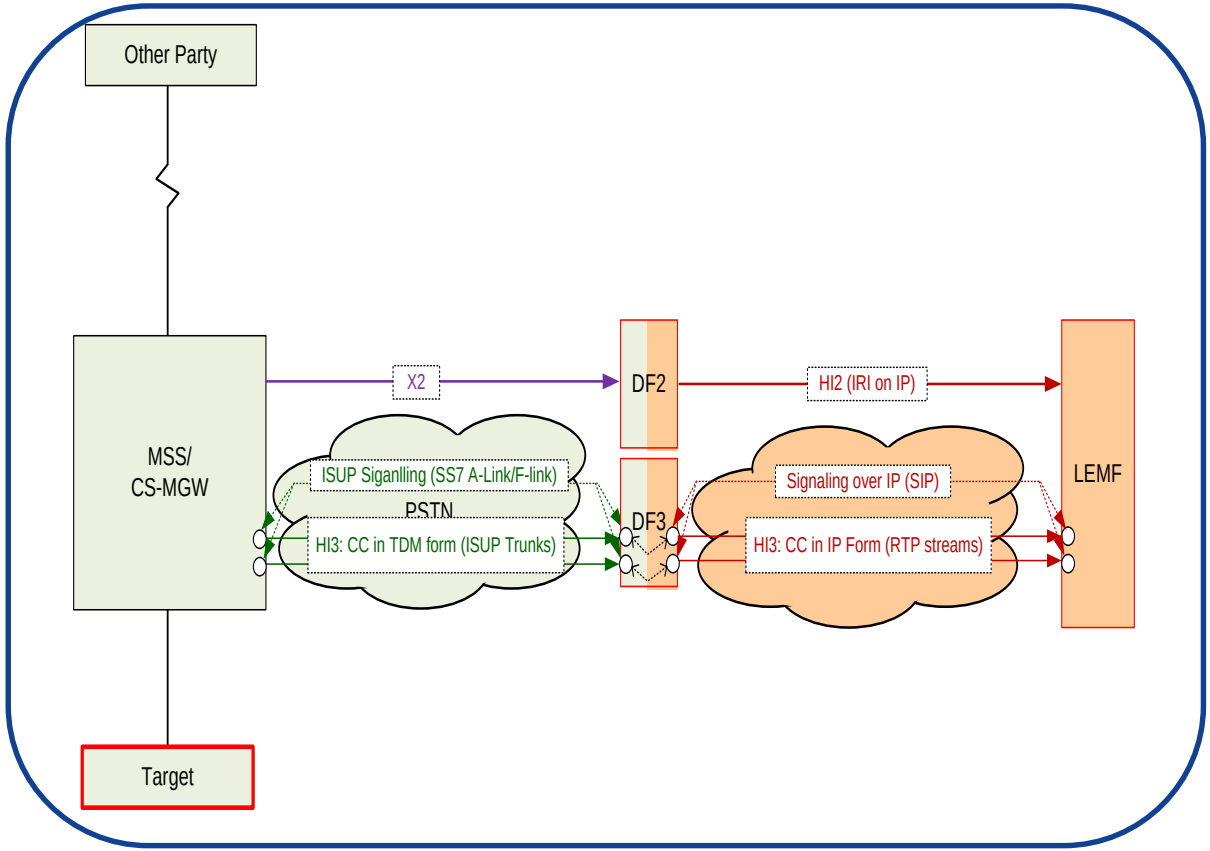

- Due to the fact that IRI are in the form of discrete messages, one can presume that the IRI can be transported over the IP domain to LEMF, if necessary.
- The diagram shows that DF2 delivers the IRI over the IP domain.
- The ICE delivers the CC the DF3 in the TDM form using ISUP for the call setup.
- The DF3 delivers the CC toward the LEMF in the IP form (RTP streams) using SIP for call setup.
- There will be two separate RTP streams, one for each direction of the voice flow.
- In this example, the LEA has upgraded the collection equipment and therefore, no reverse conversion is necessary.

 © Nokia 2017

NOKIA
Created by Nag Rao

IP-based HO interface for CS Intercepts – Scenario 4

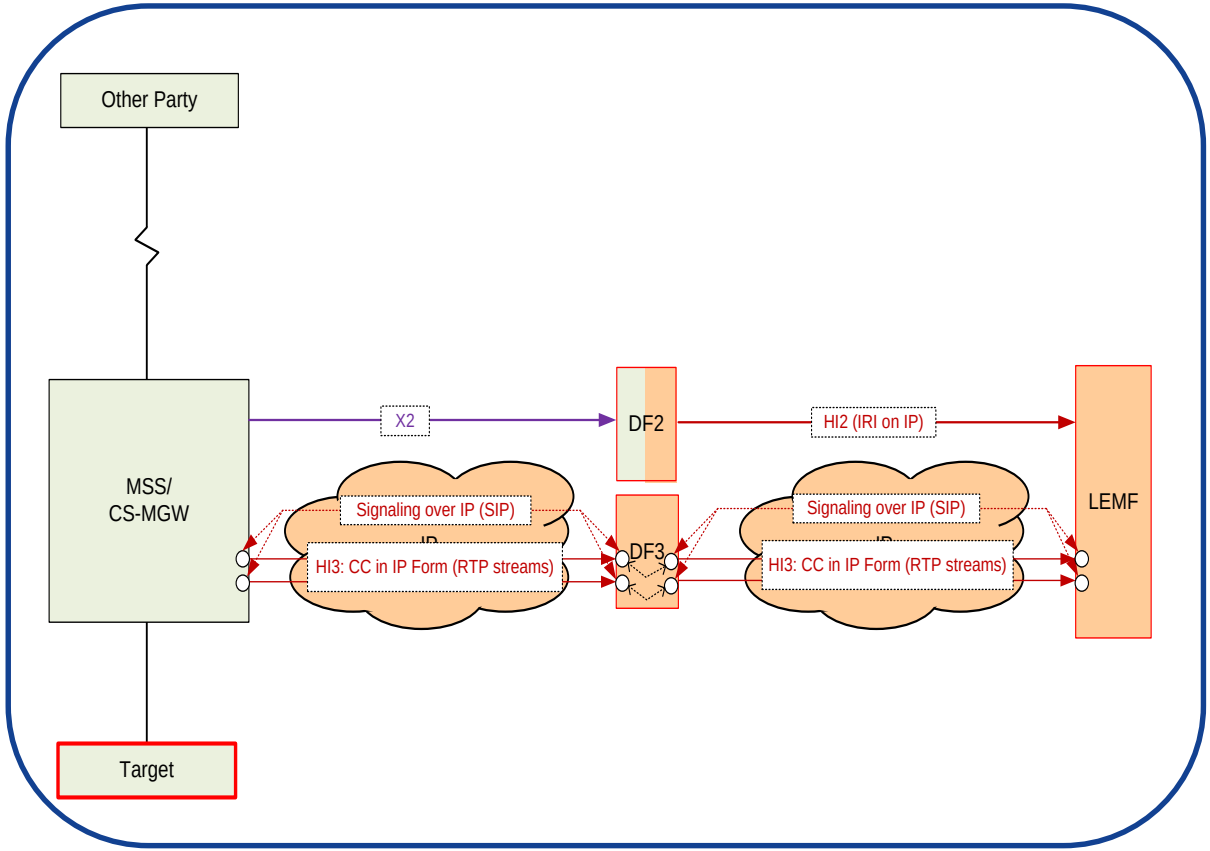

- Due to the fact that IRI are in the form of discrete messages, one can presume that the IRI can be transported over the IP domain to LEMF, if necessary.
- The diagram shows that DF2 delivers the IRI over the IP domain.
- The ICE delivers the CC to the DF3 in the IP form (RTP streams) using SIP for the call setup.
- There will be two separate RTP streams, one for each direction of the voice flow.
- The DF3 forwards the CC in the IP form (RTP streams) toward the LEMF using SIP for call setup.
- There will be two separate RTP streams, one for each direction of the voice flow.
- In this example, the LEA has upgraded the collection equipment and therefore, no reverse conversion is necessary.

 © Nokia 2017

NOKIA
Created by Nag Rao

Summary and Conclusion

 © Nokia 2017

NOKIA
Created by Nag Rao

Background: Overview

- IRI
  - The IRI for CS are discrete messages as defined in 3GPP TS 33.108 B.3a.
  - Due to the nature of discrete messages one can presume that the IRI can be sent over the IP domain to LEMF if necessary.
  - No change to the 3GPP LI standards would be necessary.
- CC (Today):
  - Delivered over ISUP trunks to the LEMF.
  - May be delivered through the DF3 or may be delivered directly to LEMF (DF3 presumed to be part of ICE).
  - For separated delivery option, media to and from target are delivered on separate ISUP trunks.
  - When ISUP signaling is used, the signaling may use either A-links or F-links.
- CC (IP-based HO interface):
  - To transport the CC in the IP form, the BICC or SIP can be used. However, to support the LEMF as a SIP end point, SIP is the preferred signaling method. Then the CC will be transported over the IP domain in the IP form (RTP streams).
  - The Correlation information could be transported using isub parameter in SIP (RFC 4715).
  - There will be one RTP stream for each direction of voice flow.
  - A TDM to IP conversion can be done at the ICE or at the DF3.
  - To support this capability, there won't be any 3GPP TS 33.108 impacts.
  - If the approach is agreeable, the concept could be documented in an informative annex of 3GPP TS 33.107. The reason for the inclusion in an informative form is because there are different ways one can accomplish the need.

 © Nokia 2017

NOKIA
Created by Nag Rao

NOKIA

 © Nokia 2017